INSTRUCTION MANUAL

Type 1683
Automatic RLC
Bridge

D

GenRad

File Courtesy of GRWiki.org

GenRad

WARRANTY

This product is warranted to be free from defects in material and workmanship and, when properly used, will perform in accordance with specifications. Any GR-manufactured instrument, module, or part found not to meet this standard within a period of one year after original shipment will be repaired or replaced at no charge when returned to a GR service facility.

GR policy is to maintain repair capability for a period of ten years after the original shipment and to make this capability available at the then prevailing schedule of charges for any product returned to a GR service facility. Changes in the product not approved by GR shall void this warranty. GR is not liable for consequential damages.

This warranty is in lieu of all other warranties, expressed or implied, including, but not limited to, the implied warranties of merchantability and fitness for a particular purpose.

File Courtesy of GRWiki.org

Contents

SPECIFICATIONS
CONDENSED OPERATING INSTRUCTIONS
INTRODUCTION – SECTION 1
INSTALLATION – SECTION 2
OPERATION – SECTION 3
THEORY – SECTION 4
SERVICE AND MAINTENANCE – SECTION 5
PARTS LISTS AND DIAGRAMS – SECTION 6

Type 1683
Automatic RLC
Bridge

D

©GenRad 1976
Concord, Massachusetts, U.S.A. 01742
Form 1683-0150-D

August 1976
ID-5783

File Courtesy of GRWiki.org

Specifications

Measurement	Range at 120 Hz	Range at 1 kHz	Accuracy (% of reading) ± (% of full scale)
CAPACITANCE With concurrent loss measurement (that can be displayed as dissipation factor or equivalent series resistance) and optional GO, NO-GO leakage-current test.	0000.1 pF to 1999.9 μF 02.000 mF to 19.999 mF 020.00 mF to 199.99 mF	000.01 pF to 199.99 μF 0200.0 μF to 1999.9 μF 02.000 mF to 19.999 mF	±0.1% ±.005% ±1% ±.05% ±5%* (typically 1%) ±0.5%
INDUCTANCE With concurrent loss measurement expressed as series resistance.	00.001 μH to 19.999 μH 020.00 μH to 199.99 μH 0200.0 μH to 1999.9 H	0000.1 nH to 1999.9 nH 02.000 μH to 19.999 μH 020.00 μH to 199.99 H	±5%* (typically 1%) ±0.5% ±1.0% ±0.1% ±0.1% ±.01%
RESISTANCE Simple resistance, or series resistance with inductance measurements.	00.001 mΩ to 19.999 mΩ 020.00 mΩ to 199.99 mΩ 0200.0 mΩ to 1999.9 kΩ		±5%* (typically 1%) ±0.5% ±1% ±.05% ±0.1% ±.005%
DISSIPATION FACTOR (D) Concurrent with capacitance measurements.	0.0000 to 1.9999 accuracy differs on the following capacitance ranges: 0.2000 mF to 19.999 mF 20.000 mF to 199.99 mF	 0200.0 μF to 1999.9 μF 02.000 mF to 19.999 mF	±1% ±0.05% ±1% ±0.5% ±5% ±5%
EQUIVALENT SERIES RESISTANCE (Option 4) Concurrent with capacitance measurements.	00.001 mΩ to 19.999 mΩ 020.00 mΩ to 1999.9 kΩ with C reading of: 03000 to 19999 02000 to 02999 01000 to 01999		±5%* (typically 1%) ±0.5% ±1% ±0.1% ±1% ±0.125% ±1% ±0.5%
LEAKAGE CURRENT (Option 3) GO, NO-GO indication concurrent with capacitance measurement.	2.5 μA to 25 mA in 5 ranges		2% of reading

* In single or variable measurement mode; ±1% of reading plus ±0.1% of full scale in tracking mode.

SPECIFICATIONS

Display: Reactive and resistive readouts, each with 4½-digit resolution, high-intensity neon readout tubes, decimal point, and unit of measurement. Display also indicates measurement frequency, unbalanced condition, manual- or remote-ranging condition, and GO or NO-GO result of leakage current measurement.

Speed: Measurement rate at 1 kHz is ≈ 20 measurements per second for ±1% of full-scale change in unknown, 16/s for ±10% change, and 8/s for ±100% change; at 120 Hz, rates 10 times slower. Interval between measurements can be infinite (measurements initiated by front-panel pushbutton or external closure to ground) or from ≈ 20 ms to 1 s as set by front-panel control so that measurements are repetitive. Speed may be decreased slightly when D is measured near the low end of each capacitance range.

Terminals: Five; 4-terminal connection minimizes errors due to lead impedance and ground terminal minimizes error due to stray capacitance. Connections to unknown are made by coaxial cables at the front and the rear of the instrument. A 1683-P1 Test Fixture is available for the rapid connection of axial-lead components and contains a start button to initiate the measurements. Stray capacitance up to 2 pF across the test fixture can be cancelled by an adjustment on the rear of the 1683.

Ranges: Nine for all measurements except five for leakage current. Ranging can be automatic, manual, or remote except leakage current which has no automatic ranging.

Oscillator Level: Voltage applied to unknown can be reduced from the normal 2.2 V rms for special applications.

Sensitivity: Can be manually or remotely reduced from maximum, with consequent loss of resolution, to overcome problems with non-linear or rapidly changing unknown or external noise or hum pickup.

Bias: 0 to 3 V internal, manually or remotely set; 600 V max, external; Bridge fully protected from possible damage by charged or shorted capacitors.

Leakage-Current Test (Option 3): NO-GO limit can be manually set with 2% accuracy or remotely measured with 2% accuracy from 1 μA (under vernier control) to 25 mA. External monitoring of leakage current or of a dc voltage proportional to leakage current provided.

Interface:

Low-Level Data Output (Option 5A): 50-pin Amphenol Type 57 connector provides 11 digits of measurement data (5 for reactance, 5 for resistance, 1 for range) plus various control inputs and outputs for systems use. Digits are 1-2-4-8-weighted BCD at standard TTL logic levels (logic "0" ≈ ground with 10-mA sink capability, logic "1" ≥ 3.5 V).

High-Level Data Output (Option 5B): Same as low-level except all outputs are 15-V swing (logic "0" ≈ ground with 10-mA sink capability, logic "1" ≈ + 15 V behind 12 kΩ).

Remote Programmability (Option 2): 50-pin Amphenol Type 57 connector provides terminals for external remote programming of all control functions except line-voltage control. Functions are controlled by closures to ground or standard TTL levels.

Environment: TEMPERATURE: +10 to +40°C operating.

Available: 1683-P1 TEST FIXTURE,
printers, recorders, card-punch couplers, scanners.

Power: 100 to 125 and 200 to 250 V, 50-60 Hz, 110 W.

Mechanical: Bench or rack models. DIMENSIONS (wxhxd): Bench, 19x7.88x25.38 in. (483x200x645 mm); rack, 19x7x 23.75 in. (483x178x604 mm). WEIGHT: Bench, 60 lb (28 kg) net, 74 lb (34 kg) shipping; rack, 50 lb (23 kg) net, 67 lb (31 kg) shipping.

Description

1683 Automatic RLC Bridge
- Bench Model, power freq: 60 Hz
- Bench Model, power freq: 50 Hz
- Rack Model, power freq: 60 Hz
- Rack Model, power freq: 50 Hz

Select following options, if desired
- OP2 Remote Programmability
- OP3 Leakage Current
- OP4 ESR Readout
- OP5A* Low-Level Data Output
- OP5B* High-Level Data Output

Accessory available
- 1683-P1 Test Fixture for axial leads

* Not available together in the same instrument.

Patent Numbers 3,562,641 and 3,227,893.

The bench- and rack-mount models with combinations of the options consist of various model configurations, Catalog No. series 1683-9700 and 1683-9800 (connected for 50-Hz line-voltage operation). The -9800 series is connected for 50-Hz line-voltage operation; the -9700 series is for 60-Hz operation, which can be reconnected for 50-Hz if necessary.

File Courtesy of GRWiki.org

Condensed Operating Instructions

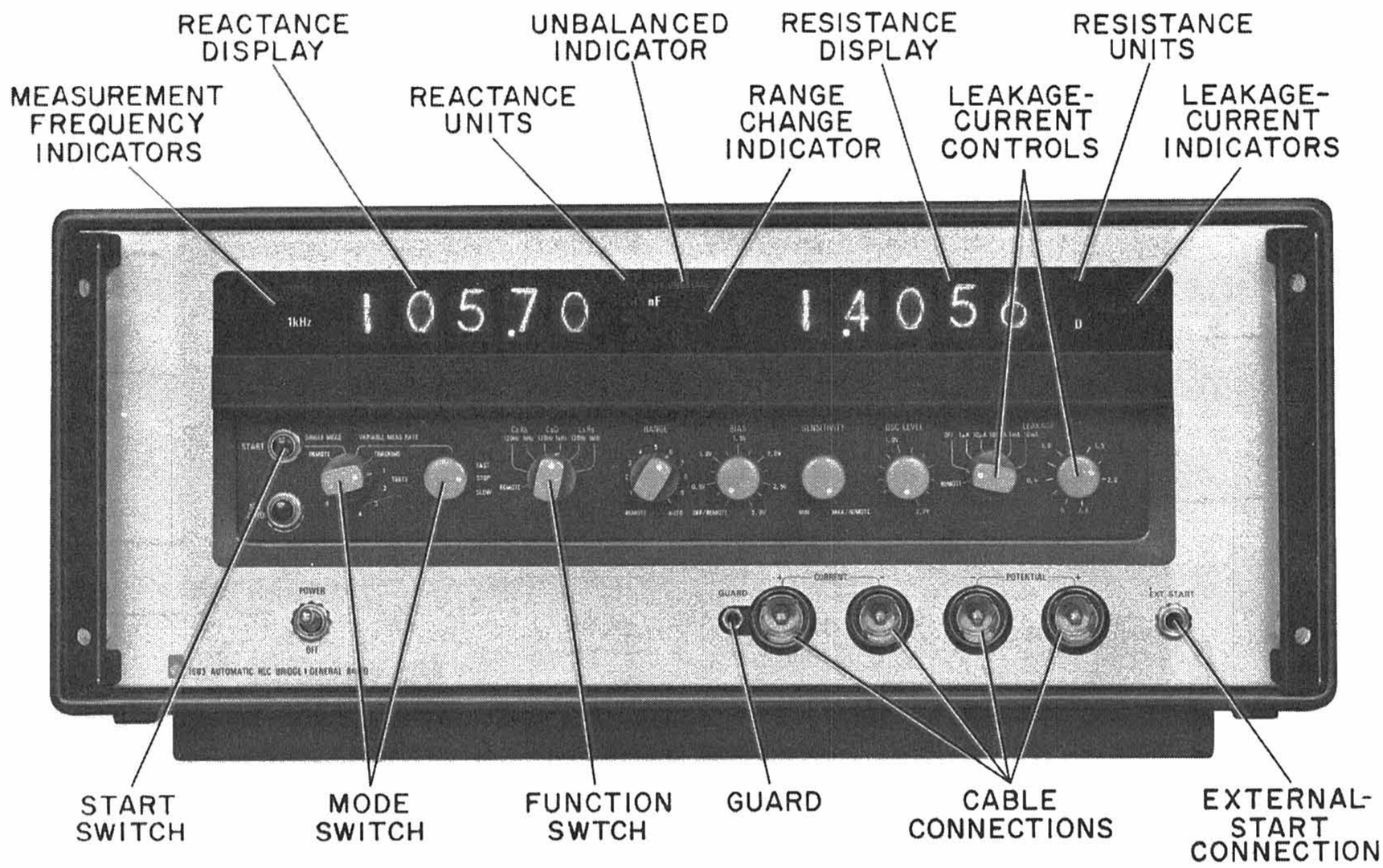

To operate the 1683:

a. Connect the cables and test fixture to the instrument (paragraph 3.1). If remotely programming the instrument, refer to paragraphs 3.11 and 2.4. If recording data, refer to paragraph 2.4., if necessary.

b. Set the function switch for the type of part being measured and for the measurement frequency (paragraph 3.10). If leakage current is being measured, set the LEAKAGE controls for the proper range (paragraph 3.9). Make sure the BIAS control is set to OFF if measuring inductors.

c. Set the mode switch for the desired mode of operation (paragraph 3.5).

d. If capacitors are being measured, set the bias control to the desired level (paragraph 3.8). If using an external bias source, connect the source to the rear-panel BIAS connectors and set the rear-panel BIAS control to EXT.

WARNING

The external bias voltage is at the terminal center conductors, ends of the cables, and/or at the test fixture. If using a higher voltage, observe the warning described in paragraph 3.1. Also, be careful when handling charged capacitors; the bridge does not discharge capacitors.

e. Set the SENSITIVITY control to MAX for maximum sensitivity of one count or less, or set the control roughly for any desired sensitivity and adjust after turn-on.

f. Set the RANGE switch to the desired range (see Table 3-1) and the OSCILLATOR LEVEL to the desired level. (Refer to paragraph 3.6.)

g. Set the POWER switch to POWER; the appropriate unit and frequency indicators and the UNBALANCE indicator should light. The GO or NO GO indicator will be lit if leakage is being measured.

h. Press the START pushbutton or test fixture (if not externally programmed for "start" operation). If measuring leakage current, observe that the NO GO indicator illuminates. The GO indicator will then light if the leakage current is acceptable. A balance operation will occur after the GO indicator lights or after the time set for the leakage-current measurement.

i. Adjust the LEAKAGE, SENSITIVITY, VARIABLE MEAS RATE and OSCILLATOR LEVEL controls as necessary.

File Courtesy of GRWiki.org

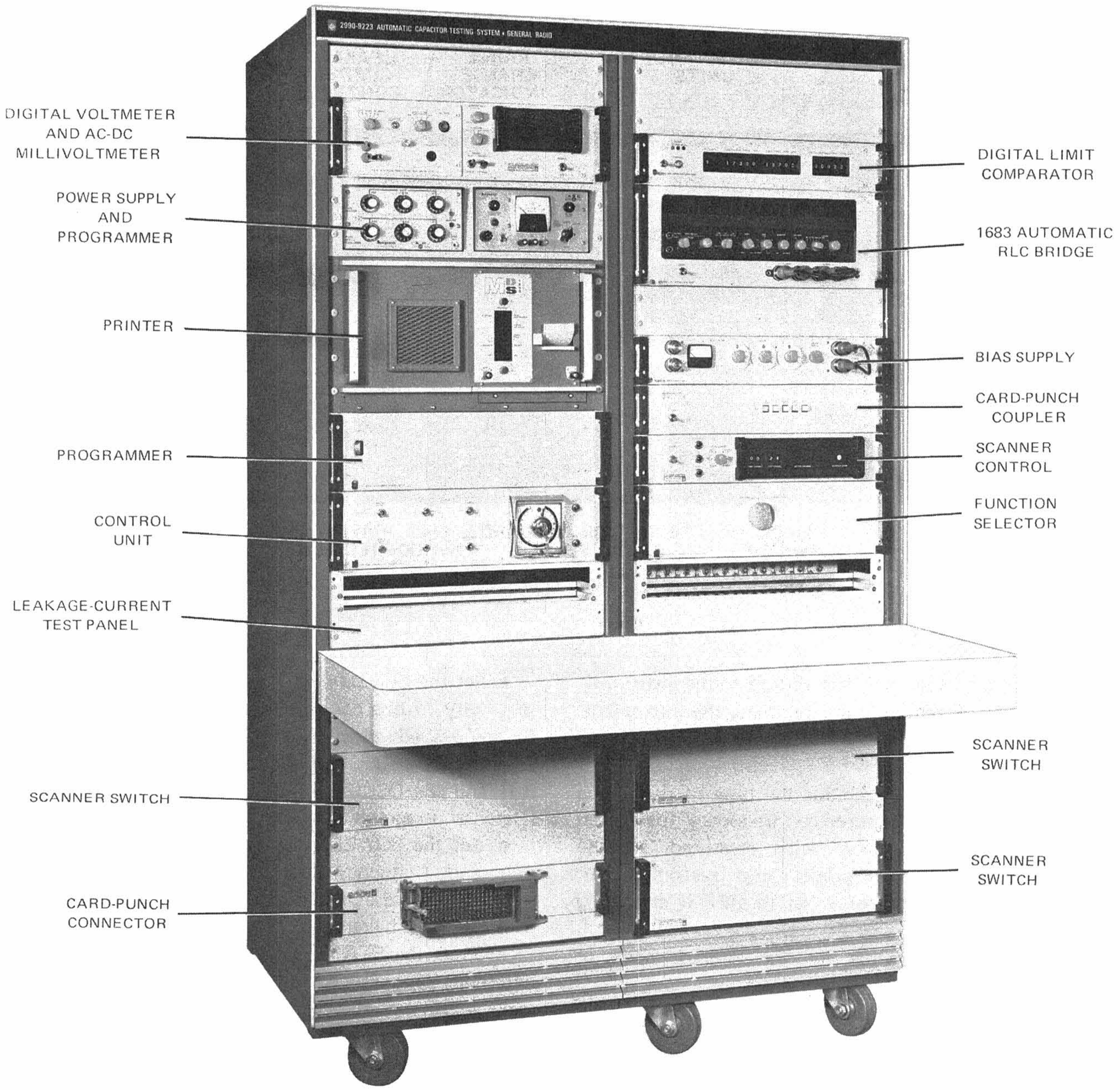

Typical General Radio testing system using the 1683 RLC Bridge.

File Courtesy of GRWiki.org

Introduction–Section 1

1.1 PURPOSE 1-1
1.2 GENERAL FUNCTIONAL DESCRIPTION 1-1
1.3 GENERAL PHYSICAL DESCRIPTION 1-1
1.4 CONTROLS, DISPLAYS, AND CONNECTORS 1-2
1.5 ACCESSORIES SUPPLIED 1-6
1.6 ACCESSORIES AVAILABLE 1-6
1.7 SYSTEMS 1-6
1.8 AVAILABLE PATCH CORDS AND ADAPTORS 1-6
1.9 1683-P1 TEST FIXTURE 1-12

1.1 PURPOSE.

The 1683 Automatic RLC Bridge is a fully automatic, all solid-state general-purpose bridge that measures resistance, inductance, and capacitance at two frequencies, 120 Hz and 1 kHz. The 1683 can be controlled for slow to fast operations, measuring up to 20 components a second and giving answers with five-digit resolution. Operation can be manual, automatic, or under computer control. Remote programmability is available for all functions except bias and voltage level.

For capacitance measurements, concurrent and direct-reading values of loss expressed as dissipation factor or equivalent series resistance (optional) and a go, no-go indication of leakage current are possible. Simple resistance and inductance with loss as a series element can also be measured. Capacitors can be measured with internal bias voltages of 0 to 3 V or with external bias voltages up to 600 V. Thus, with one device and at one time, nearly any capacitive device, including large-value electrolytics (up to 0.2 F), can be conditioned and measured.

With options the 1683 is fully programmable and contains a provision for inputs and outputs for such enhancements as data printing, card punching, computer control, and scanner operation, all of which can be supplied by General Radio separately or as a system. All programming functions are initiated with closures to ground and are compatible with standard transistor-transistor logic (TTL or T^2L). Output levels can be standard TTL or 15 V behind 12 kΩ.

The nature of the bridge enables low impedances to be accurately measured, with effects of lead impedances minimized by the four-terminal connection to the unknown. High impedances can also be measured very accurately because stray capacitances are either connected across the oscillator test signal source or a low-impedance current divider, and as such, are guarded by the low impedance to ground. A fifth terminal, a ground terminal, provides safeguards with high impedances whose measurements might otherwise be affected by stray capacitance. The 5-terminal connection allows the operator to more easily and accurately measure the part under test.

Thus, remote measurements are possible. This is especially desirable when the unknown is situated in a temperature chamber, production line or in some way removed from the operator. Two- and three-terminal measurements can also be made.

In addition to manual operation, the 1683 is ideally suited for computer-controlled systems, where all measurements and data retrieval are performed under a program written expressly for the particular testing procedure required. Refer to paragraph 1.7.

1.2 GENERAL FUNCTIONAL DESCRIPTION.

Refer to Section 4 for a general and detailed functional description.

1.3 GENERAL PHYSICAL DESCRIPTION.

The 1683 is available in two models, a relay-rack-mount configuration and a bench-mount configuration. The rack-mount unit is assembled in a metal cabinet and, with a

File Courtesy of GRWiki.org

minimum amount of hardware, is ready for mounting in an EIA standard 19-inch relay rack. The bench-mount unit can be set in a tilted position on a bench, for easy viewing of the front panel, by releasing the bottom panel of the cabinet and pulling down the bail underneath the instrument.

The unit has its own power supply, including a 0 - 3-V internal bias supply for capacitors under test. The unit can be operated from 50-60-Hz line voltages of 100-125 V and 200-250 V, selectable at the rear panel. Proper fuses for these voltages (1.25 A for 100-125 V and 0.6 A for 200-250 V) are fitted in fuse holders on the rear panel. In addition, alternate front-panel terminal connections are on the rear panel for use, if desired, when rack mounting or for other uses. The physical characteristics of the unit are described in the specifications at the front of the manual. Complete dimensions for the bench-and-rack-mount units are given in Section 2.

All the circuits of the 1683 are on 23 circuit boards (if all the options are included), and each board contains the circuitry for a specific function; for example, the counter associated with each of the two front-panel displays is mounted on an individual board; bridge divider boards are separate boards, etc.

Table 4-1 lists all the boards in the unit. The boards are designated by a letter, as shown in the table. With the exception of the "mother board", which is the bottom etched intra-connecting board, all the circuit boards are mounted vertically, plugged into sockets on the mother board, and are identified by their designation letter, which is engraved on latches that hold the board in the socket.

When the chassis is removed from the cabinet and turned on its side, all the input- and output-signal connections of the boards are available at terminals on the bottom of the mother board. The board is grid-marked, so that the terminals can be associated with the input and output terminals of the etched circuit boards.

Most of the circuit board test points and adjustments are available at the top of the boards for easy access. With circuit board extenders (three extenders are available as accessories), all the boards, with the exception of the display (H) and control (Z) boards, can be extended from their sockets for testing. (There are only a few adjustments required after maintenance or for adjusting the instrument at extended periods.) All the standards are mounted on the mother board. Refer to the photographs in Section 5 that show the locations of internal parts.

Provisions are made for automatically testing the operation of the instrument and isolating possible malfunctions. The front-panel mode control has test positions for exercising instrument circuitry. Certain circuit boards have lamps mounted on them for the monitoring of major circuit functions. These lamps are mounted for easy viewing.

Test cables used with the instrument should be twisted to preserve accuracy. The accuracy of the instrument is specified to include the test fixtures.

1.4 CONTROLS, DISPLAYS, AND CONNECTORS.

Figure 1-1 shows the 1683 front panel. Table 1-1 identifies and contains a description of the front-panel controls, displays and connectors.

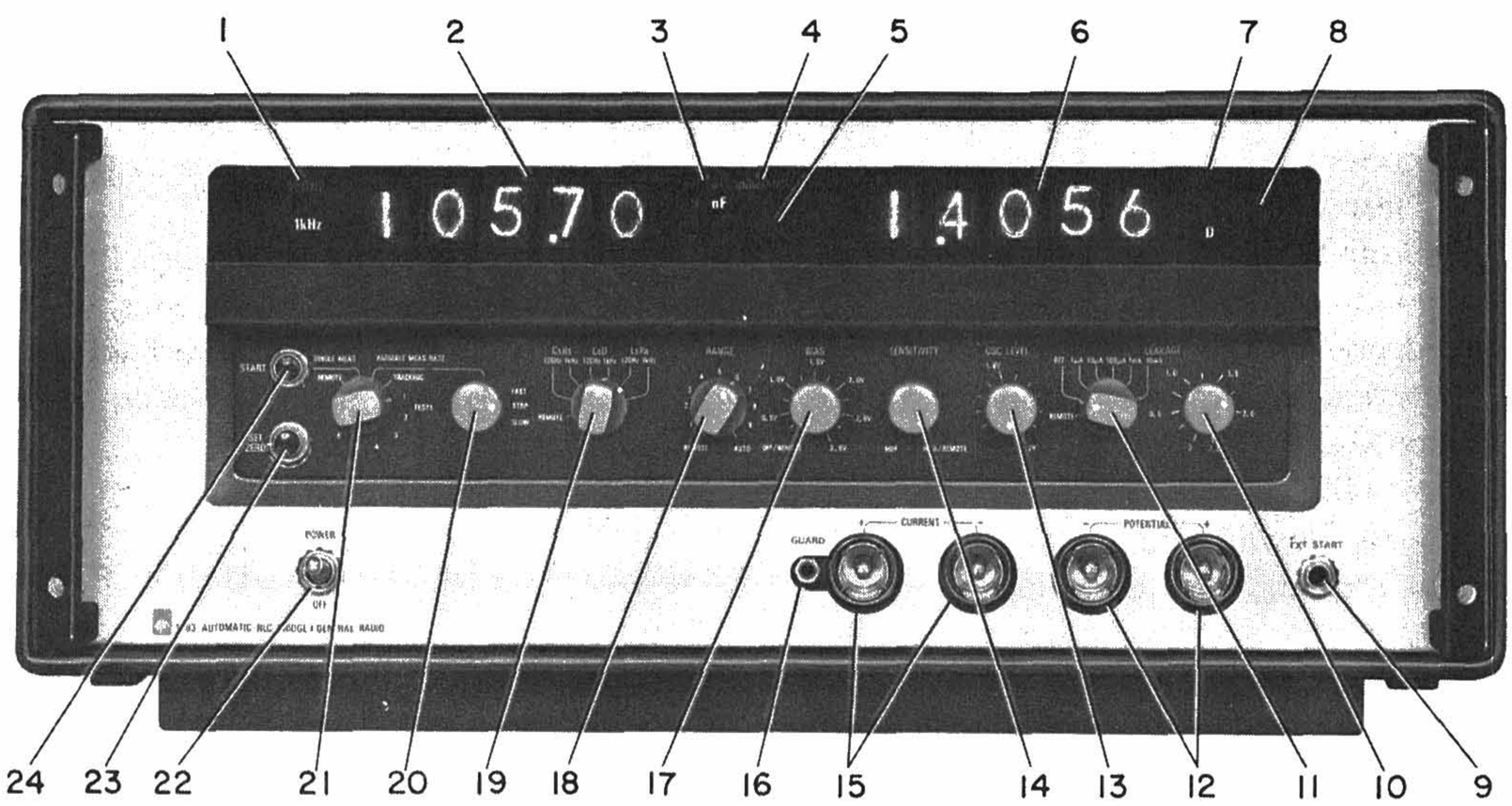

Figure 1-1. Front-panel view.

1-2 INTRODUCTION

File Courtesy of GRWiki.org

Table 1-1
FRONT-PANEL CONTROLS, CONNECTORS, INDICATORS, AND DISPLAYS

Fig. 1-1 Ref.	Name	Type	Function
1	1 kHz, 120 Hz	Lamp display	Applicable display indicates measurement frequency.
2	Reactance display	5-numeral readout tube display	Gives visual indication of capacitance or inductance measurement to five places.
3	nH-H, pF-F	Lamp display	Shows unit and range of measurement.
4	UNBALANCED	Lamp display	Lights when bridge is unbalanced by over eight counts.
5	RANGE	Lamp display	Lights when range change may be required. In the automatic-range mode, the lamp extinguishes when the range changes. In the manual mode, it extinguishes when the range is manually changed. When either 5-numeral display reads 00000, the RANGE lamps may light. However a range change occurs when both displays read 00XXX.
6	Resistance and dissipation factor display	5-numeral readout-tube display	Provides visual indication of resistance or dissipation factor.
7	mΩ, Ω, kΩ, D	Lamp display	Shows resistance and dissipation-factor units and range of resistance measurements.
8	GO, NO-GO	Lamp displays	Indicates on a GO, NO-GO basis if leakage current is acceptable by lighting the GO indicator.
9	EXT START	Telephone jack	Connection for a closure-to-ground-induced "start balance" operation. The 1683-P1 Test Fixture or similar fixture connects to this jack.
10	LEAKAGE (level)	Continuously adjustable rotary control	Selects the measurement limit for leakage current. The dial is calibrated so that there is a one-to-one ratio between the setting and leakage current on each of the LEAKAGE ranges; e.g., 1.0 equals 1 μA, 10 μA, etc; 2.5 equals 2.5 μA, 25 μA, etc. Unmarked dial graduations are the midranges. The control is used in conjunction with the VARIABLE MEAS RATE control, which selects the maximum time allowed for leakage current to reach its limit. The GO indicator lights if the leakage current falls below the limit selected within the time selected.
11	LEAKAGE (range)	7-position rotary switch NOTE The REMOTE position on all switches allows the functions to be controlled or established externally, through the rear-panel AUXILIARY socket	Selects seven ranges of leakage current (Table 3-2) The REMOTE position turns off the leakage function or allows the ranges to be programmed externally through the AUXILIARY socket on the rear panel.

File Courtesy of GRWiki.org

Table 1-1 (Cont)
FRONT-PANEL CONTROLS, CONNECTORS, INDICATORS, AND DISPLAYS

Fig. 1-1 Ref.	Name	Type	Function
12	POTENTIAL (–+)	GR Type 874 connector	Two of the four-terminal measurement connections (high- and low-side voltage).
13	OSC LEVEL	Continuously adjustable rotary control	Adjusts the oscillator test signal from a minimum to 2.2 V rms, open circuit.
14	SENSITIVITY	Continuously adjustable 2-position rotary control	Adjusts the instrument sensitivity from a minimum to a maximum of one count when set to the MAX position. The REMOTE position allows the sensitivity to be established externally by a programmable resistance.
15	CURRENT (+–)	GR Type 874 connector	Two of the four-terminal measurement connections (high- and low-side current).
16	GUARD	Banana jack	Ground terminal that provides a safeguard to preserve the bridge accuracy when measuring high impedances (range 6 or above) whose measurement might otherwise be affected by stray capacitance.
17	BIAS	Continuously adjustable rotary control	Provides a bias voltage from 0 to 3 V for the *capacitor* under test. The OFF/REMOTE position allows an external bias voltage of up to 600 V to be applied to the rear-panel BIAS connector and, therefore, to the capacitor under test.
18	RANGE	11-position rotary switch	Establishes nine fixed bridge ranges (1-9; refer to Table 3-1) for the function being measured. In the AUTO position, allows the bridge to range automatically through these ranges. In the REMOTE position, fixed ranges can be established externally by grounding the appropriate pin connection on the AUXILIARY socket.
19	CsRs, CsD, LsRs (Function)	7-position rotary switch	Selects the function to be measured and the measurement frequency. Capacitance with equivalent series resistance (CsRs) is an optional function. LsRs is either simple resistance or inductance with loss expressed as a series element. CsD is capacitance with dissipation factor. If leakage current is being measured, it precedes the capacitance measurement. The REMOTE position allows these functions to be programmed externally.

File Courtesy of GRWiki.org

Table 1-1 (Cont)
FRONT-PANEL CONTROLS, CONNECTORS, INDICATORS, AND DISPLAYS

Fig. 1-1 Ref.	Name	Type	Function
20, 21	Mode	10-position rotary switch	
	SINGLE MEAS		When set to this position, allows a single measurement to be made when the START pushbutton is pressed or a start signal is introduced at the EXT START connector.
	VARIABLE MEAS RATE		When set to this position, the instrument operates automatically, making repetitive measurements. With the FAST-SLOW control, allows leakage measurements to be varied from 70 ms (FAST) to 10 s (SLOW). For all other measurements, allows the time between the start of a balance operation to be varied from approximately 20 ms to 1 s. Also allows the measurement rate to be varied in the tracking mode and test mode. the STOP position allows the measurement count to be held and/or prevents a further balance.
	TRACKING		This position allows the instrument to monitor changes that occur over a period of time (usually in drift tests).
	REMOTE		Allows remote program control of instrument (para. 3.11).
	TEST 1		Causes reactance counter and display to count forward, using a test clock rate to check the display and associated counter. The RANGE control can be used in conjunction with this mode (TEST 1-4) to count through all ranges.
	TEST 2		Same as TEST 1 except reactance counter and display count reverse.
	TEST 3		Same as TEST 1 except resistance counter and display count forward.
	TEST 4		Same as TEST 1 except resistance count and display count reverse.
	TEST 5 & 6		Cause bridge to balance at a rate of from 500 counts per second to 1 count per second, determined by the setting of the VARIABLE MEAS RATE control.
22	Power	Toggle switch, DPST	When set to POWER, applies power to the instrument.
23	SET ZERO	Pushbutton switch	When pressed, sets all numerical displays to zero.
24	START	Pushbutton switch	When pressed, starts a leakage-current measurement and/or balance operation.

File Courtesy of GRWiki.org

Figure 1-2 shows the rear panel, and Table 1-2 identifies and contains a description of the rear-panel controls, fuses, and connectors. It should be noted that all display information is available at the rear-panel data-output connection (if provided) for recording by peripheral equipment.

1.5 ACCESSORIES SUPPLIED.

A power cord (P/N 4200-9625) is supplied with the instrument.

1.6 ACCESSORIES AVAILABLE.

There are two types of accessories available: (1) the type that will allow the instrument to perform additional functions, allow programming of the instrument and data outputs, and aid in testing or calibration; and (2) those that will allow such enhancements as data printing, card punching, computer control, scanner operation, and also operational checks, calibration and testing. Table 1-3 lists the first type, and Table 1-4 lists the second type. The items listed in Table 1-4 for the enhancement of operations can be supplied separately or as a system.

1.7 SYSTEMS.

The greatest capability of the 1683 is found in a computer-controlled system where all measurements and data retrieval are performed under command of a program written expressly for the particular testing procedure required. The computer can control such ancillary equipment as scanners, comparators, component sorters, programmable power supplies, leakage testers, card punch couplers and machines, tape readers, digital thermometers and other equipment, as well as the bridge.

There are many types of systems, with or without computers, and combinations of equipment in which the 1683 will increase processing speed and measurement capabilities. All the devices listed in Table 1-4 will operate in combination with each other as well as the 1683. General Radio can supply complete systems or combinations of equipment to meet almost any individual requirement and includes only the equipment necessary to perform the required task. Systems, or combinations of equipment, can or are completely assembled and checked as a unit. Complete software is also available.

Figure 1-3 shows a block diagram of a typical system available from General Radio.

1.8 AVAILABLE PATCH CORDS AND ADAPTORS.

The rear-panel ±BIAS connection is a standard 3/4-in.-spaced pair of banana jacks. The STRAY C CAPACITANCE connector is a BNC jack. A wide variety of GR patch cords is available as well as a comprehensive selection of adaptors to convert the terminals for use with most commercial and military coaxial connectors.

For the user who wishes to mate the bridge to components fitted with coaxial connectors of other leading coaxial series, GR874® adaptors are available to convert the ±POTENTIAL and ±CURRENT connectors to the desired type of plug or jack. Refer to the Appendix at the rear of this manual for the GR adaptors and other coaxial components that are available.

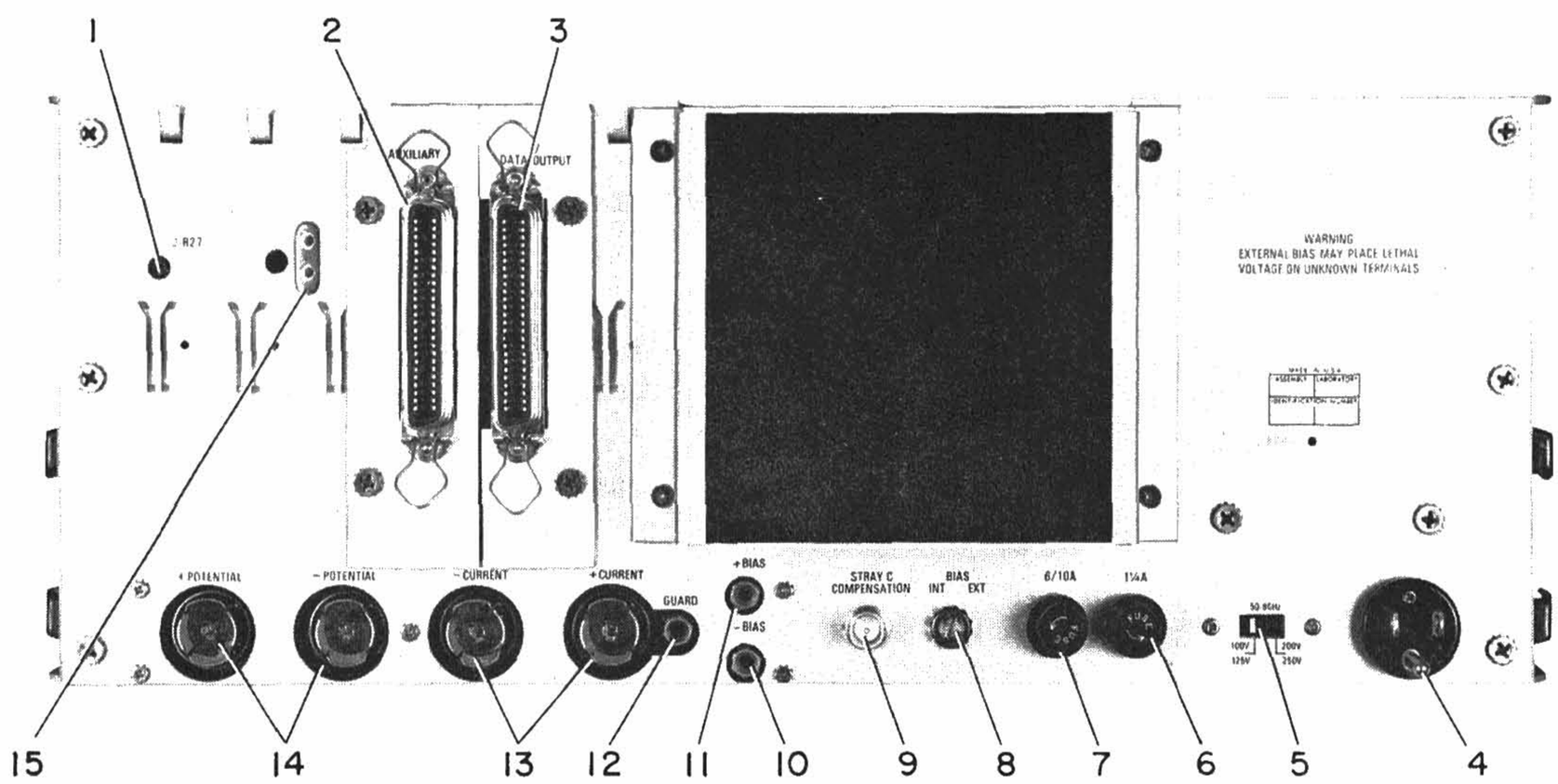

Figure 1-2. Rear panel view.

1-6 INTRODUCTION

File Courtesy of GRWiki.org

Table 1-2
REAR-PANEL CONTROLS AND CONNECTORS

Fig. 1-2 Ref.	Name	Type	Function
1	J-R27	Screwdriver adjustment	Adjustment for cancelling up to 2 pF of stray capacitance across the unknown terminals.
2	AUXILIARY (Data-Input)	Socket, 50-pin; accepts Amphenol or Cinch 57-30500 plug.	Receptacle for external remote programming of all control functions.
3	DATA-OUTPUT	Socket, 50-pin; accepts Amphenol or Cinch 57-30500 plug.	Receptacle for supplying measurement data for recording by external equipment and for handling various input and output control signals for system use.
4	Power connector	3-wire power-plug receptacle.	Connection for 100- to 125-V or 200- to 250-V, 50- to 60-Hz line voltage.
5	100-125, 200-250, 50-60 Hz.	2-position slide switch.	When set to 100-125, the instrument will operate on 100-125-V line voltage. When set to 200-250, the instrument will operate on 200-250-V line voltage.
6	1¼ A	Extraction-post fuse holder.	Holds 1.25-A Slo-Blo fuse for 100-125-V line (Bussman Mfg. AGC 1.25 A or equivalent).
7	6/10 A	Extraction-post fuse holder.	Holds 0.6-A Slo-Blo fuse for 200-250-V line (Bussman Mfg. MDL 0.6 A or equivalent).
8	BIAS	2-position rotary switch (screwdriver turn)	When set to INT, 1683 provides bias of up to 3 V. When set to EXT, allows an external bias voltage of up to +600 V to be applied to capacitors under measurement.
9	STRAY C COMPENSATION	BNC jack	When a low-loss adjustable capacitor is connected between the connector and either the minus (–) POTENTIAL or minus (–) CURRENT terminal, allows more than 2 pF of stray capacitance across the test fixture to be cancelled. Up to 2 pF can be cancelled with adjustment J-R27.
10 & 11	+BIAS, –BIAS	¾-in.-spaced banana jack	High- and low-side connections for an external bias supply of up to +600 V. This voltage, when used, is available at the CURRENT (+) terminal when the rear-panel BIAS control is set to EXT. The –BIAS connector must be 0 V.

File Courtesy of GRWiki.org

Table 1-2 (Cont)
REAR-PANEL CONTROLS AND CONNECTORS

Fig. 1-2 Ref.	Name	Type	Function
12	GUARD	Banana jack	Alternate ground measurement-connection for a rack-mount unit or when a rear input connection is desired.
13 & 14	CURRENT (+–) POTENTIAL (+–)	GR 874 connectors	Alternate measurement terminals.
15	External leakage current	3/4-in.-spaced banana jack	Connection for measuring external leakage current. Bottom terminal is ground connection.

Table 1-3
INSTRUMENT ACCESSORIES AVAILABLE

Name	GR Type or Part No.	Function
C-Divider Board	P/N 1683-4718	Allows the measurement of equivalent series resistance for capacitance measurements.
Leakage Board L	P/N 1683-4724	Allows the measurement of leakage current independently or with a capacitance measurement.
Data Output Board (high-level)	P/N 1683-4703	Provides outputs for all measurement data (11 digits) for recording and inputs and outputs for system use. Digits are 1-2-4-8 weighted BCD with a 15-V swing (logical "0" ≈ ground with 10-mA sink capability; logical "1" ≈ +15 V behind 12 kΩ). IC's on circuit board are interchangeable for low-level capability.
Data Output Board (low-level)	P/N 1683-4704	Same as high-level board above except signals are compatible with standard TTL levels (logical "0" ≈ ground with 10-mA sink capability; logical "1" ≥3.5 V). IC's on circuit board are interchangeable for high-level capability.
Auxiliary Board (Data-input Board)	P/N 1683-4709	Allows remote programming of all control functions except line voltage control. Functions are controlled by closures to ground or standard TTL levels.
Etched-Board Connector (extender)	P/N 4215-2703 (95 pins)	Allows Testing Y, B, C, D and K boards. (Refer to Table 4-1.)
Etched-Board Connector (extender)	P/N 4215-2701 (58 pins)	Allows Testing S, E, I and P boards (medium-size boards).
Etched-Board Connector (extender)	P/N 4215-2702 (38 pins)	Allows Testing J, T, L, N, Q and V boards (smaller boards).
Cable Assembly	P/N 1683-0230	Test cable extension. Allows Testing of parts more than the four feet from the instrument. Length to be specified by user.

File Courtesy of GRWiki.org

Table 1-4
RELATED ACCESSORIES AVAILABLE

Name	Type or Part No.	Function
Component Test Fixture	1683-P1	Test fixture for manually measuring axial-lead components. The fixture has a built-in switch to start the balance operation. Use of the fixture does not change the accuracy of the bridge specifications.
Multiple Limit Comparator	Type 1784	Designed for use with the 1685 Digital Impedance Meter and 1683 Automatic RLC Bridge. Makes comparisons for up to 4 sets of limits, each containing a high and low value. Lamps (and electrical contact closures for external use) are furnished for high, low, and pass indicators for each set of limits. Limits can be set for priority sorting, from first set of limits to fourth set. Indicator lamps also furnished for priority sorting, total limit failures, and loss-limit failures. Unit is also stackable, with all data available as output via a 50-pin connector.
Data Printer	Type 1785	Precise, compact, and economical means of recording measurement data. Has up to 21-column capacity with a printing rate of up to three lines per second, minimum. A two-color ribbon can be controlled by the 1683 to print red or black on roll or fan-fold paper.

File Courtesy of GRWiki.org

Table 1-4 (Cont)
RELATED ACCESSORIES AVAILABLE

Name	Type or Part No.	Function
Digital Limit Comparator	Type 1781,1783	Allows the impedance difference to be compared to a set of upper and lower limits for GO, NO-GO testing. The results are provided visually for use by a manual operator and electrically for use by automatic equipment, such as a sorter.
Capacitance Bridge	GR Type 1615, .01% basic accuracy.	Measure standards and connections to be used in accuracy checks. Refer to paragraph 3.13.
Standard Capacitor	Type 1615-P1 (10,000 pF)	Instrument check, calibration, and test.
Reference Standard Capacitor	Type 1404-A (1000 pF), 1404-B (100 pF), 1404-C (10 pF)	Instrument check, calibration, and test.
Standard Capacitors	Type 1409-9712 (.01 μF) 1409-9706 (.001 μF) 1409-9725 (1.0 μF) 1424-9701 (10 μF) 1417-9700 (10 mF) Accuracy ±.02% nominal capacitance	Instrument check and calibration.
Variable Capacitor	Type 1422 series. Accuracy depending on type used. Refer to paragraphs 3.16 and 5.11.	For cancelling out stray capacitance above 2 pF, instrument check, calibration and testing.

File Courtesy of GRWiki.org

Table 1-4 (Cont)
RELATED ACCESSORIES AVAILABLE

Name	Type or Part No.	Function
Standard Resistors	Type 1440-9601 (1 Ω) -9611 (10 Ω) -9621 (100 Ω) -9631 (1 kΩ) -9641 (10 kΩ) -9651 (100 kΩ) -9661 (1 MΩ) Also, 0.1 Ω and .01 Ω, as well as other special values, available on request.	Extremely stable resistance standards for checking or calibrating the bridge with accuracy of ±.01% for all units except 1 Ω, which is .02%. Clip leads must be used. These may introduce some stray capacitance.
Decade Resistor	Type 1433-W, 0.02% accuracy, 11,111.1 Ω total (required for one check; see Table 3-3). Type 1433-J, 0.2%, 11,110 Ω total. (See Table 3-3 and paragraph 5.11.)	Instrument check.
Standard Inductors	Type 1482-T (10 H) 1482-P (1 H) 1482-L (100 mH) 1482-H (10 mH) 1482-E (1 mH) Accuracy ±0.1% nominal inductance	Instrument check and calibration.
Tees, coaxial	874-TL Tee, locking	Connections for three-terminal operation (2 tees required, ranges 6 through 9, Table 3-1), capacitance standards, and for variable capacitor to cancel stray capacitance above 2 pF.
Patch Cords and Adaptors	Type 274, 776, 874 and/or 274	Connections for external bias supply and adjustable capacitor for stray capacitance cancellation, or as desired. Refer to the applicable tables in Section 6.

File Courtesy of GRWiki.org

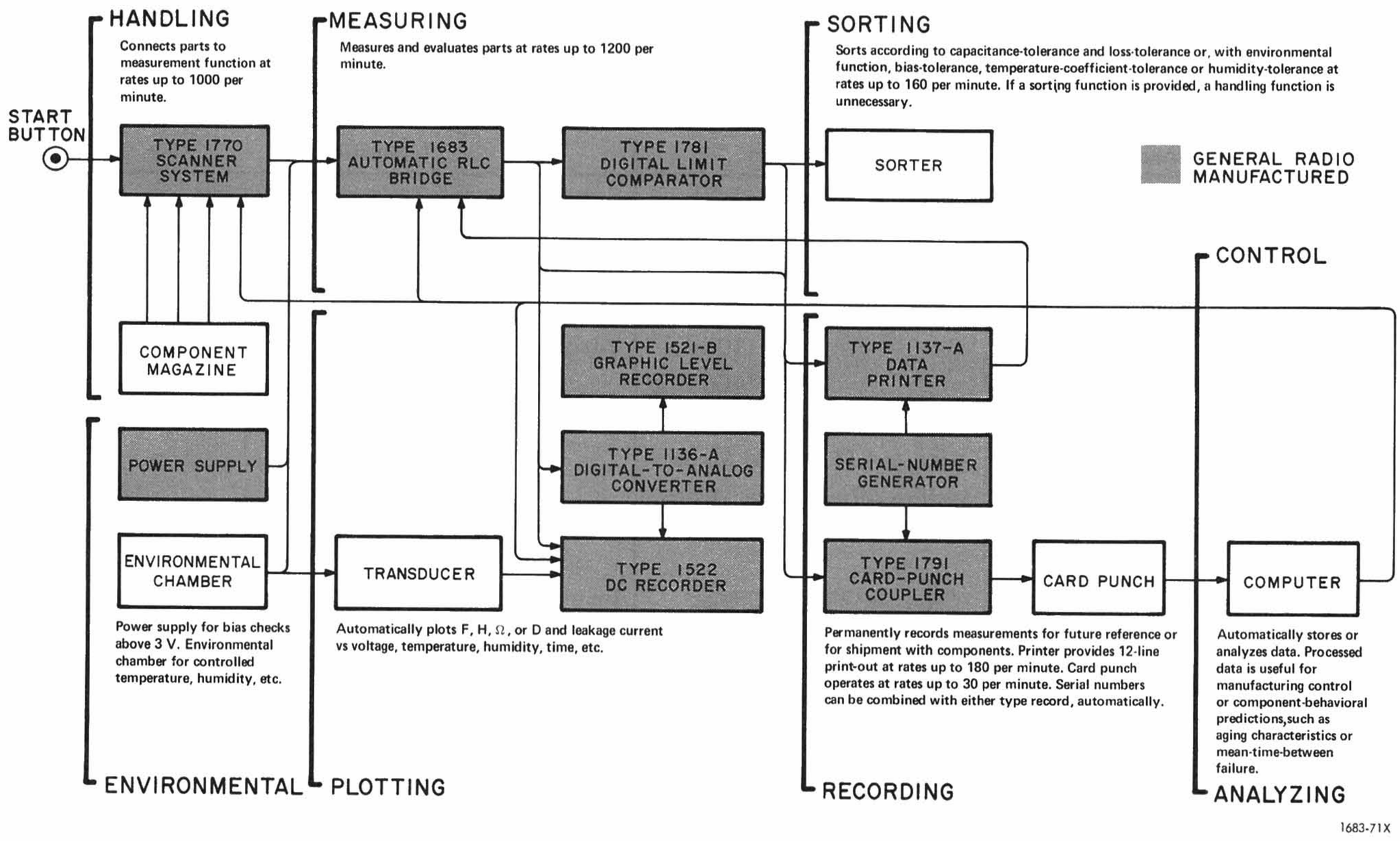

Figure 1-3. Typical General Radio system using the 1683.

1.9 1683-P1 TEST FIXTURE.

This fixture, available as an accessory, permits the rapid manual measurement of components. Figure 1-4 shows the fixture. When connected to the 1683 EXT START connector and the top to the fixture is pressed down, a 1683 balance operation will start. Any stray capacitance across the fixture can be cancelled with the 1683 rear-panel STRAY C CAPACITANCE adjustment. Figure 6-30 shows a schematic of the fixture.

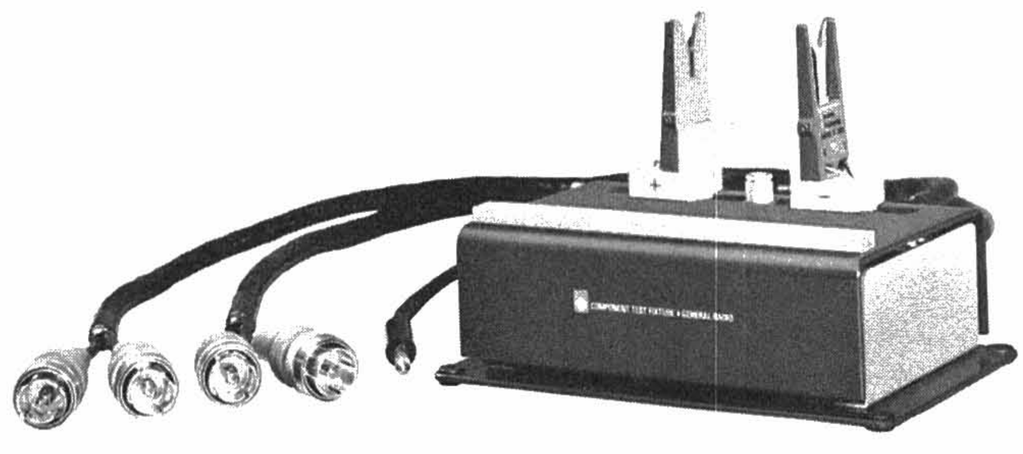

Figure 1-4. 1683-P1 Test Fixture.

File Courtesy of GRWiki.org

Installation—Section 2

2.1 INSTRUMENT LOCATION 2-1
2.2 DIMENSIONS 2-1
2.3 ELECTRICAL CONNECTIONS 2-2
2.4 EXTERNAL-DATA CONNECTIONS 2-2
2.5 BENCH-MODEL MOUNTING 2-3
2.6 RACK-MODEL MOUNTING 2-5
2.7 LINE-VOLTAGE REGULATION 2-6

2.1 INSTRUMENT LOCATION.

The 1683 Bridge can be operated in bench- and rack-mount configurations. Position the instrument so that vent holes on the sides are unrestricted. Although unrestricted airflow is desirable, no damage will result to the instrument if the air vents are obstructed.

Also, keep connections to the unknown being measured away from electromagnetic fields that may interfere with proper balancing.

2.2 DIMENSIONS.

Figure 2-1 shows the overall dimensions of the 1683 in bench- and rack-mount configurations.

2.3 ELECTRICAL CONNECTIONS.

The 1683 operates on 50- to 60-Hz line voltages of either 100 to 125 V or 200 to 250 V, depending on the setting of the line-voltage switch on the rear panel.

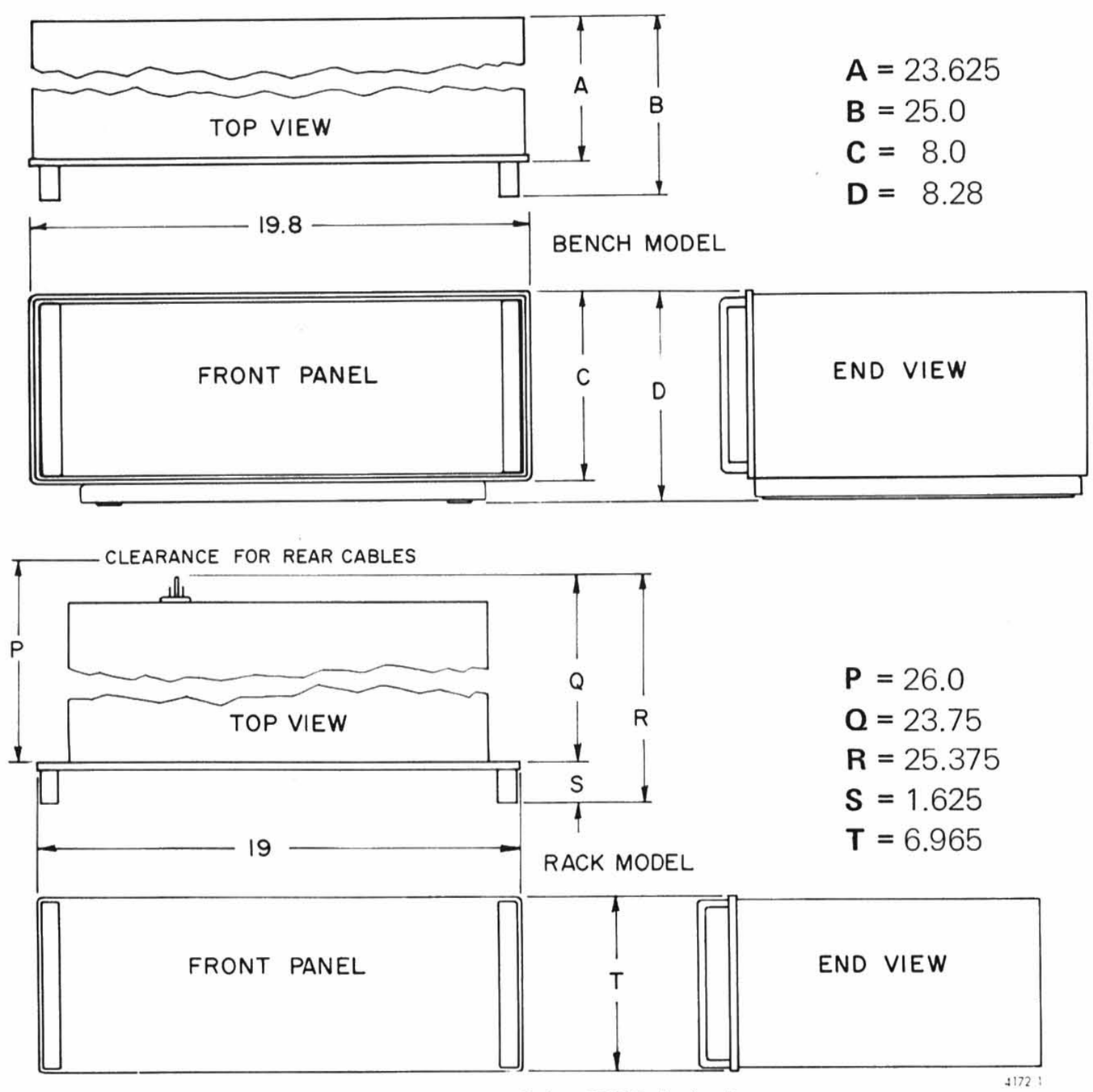

Figure 2-1. Dimensions of the 1683, in inches.

File Courtesy of GRWiki.org

Set the line-voltage switch for the appropriate line-voltage provided, using a narrow-blade screwdriver, and connect the 3-wire power cord to the line and 3-terminal male connector on the rear panel. Two fuses are in extraction-post fuse holders on the rear panel. The 1 1/4-A fuse is for the 100- to 150-V line; the 6/10-A fuse is for the 200- to 250-V line. The fuses are Slo-Blo fuses.

The bridge oscillator is synchronized with the 60-Hz line voltage to eliminate beating effects. If using 50-Hz line voltage, disconnect the sync connection at anchor terminal 8 (AT8) on the mother board. (Refer to Figure 5-1 for the location.) If this is not done, a beating effect may be introduced by the line frequency.

The instrument is fitted with a new-design power-connector that is in conformance with the International Electromechanical Commission publication 320. The 3 flat contacts are surrounded by a cylindrical plastic shroud that eliminates the possibility of electrical shock whenever the power cord is being unplugged from the instrument. In addition, the center ground pin is longer, which means that it mates first and disconnects last, ensuring greater user protection from electrical shock.

The panel connector is a standard 3-pin grounding-type, the design of which has been accepted world wide for electronic instrumentation, and is rated fro 250 V at 6A. It also meets requirements of Underwriter's Laboratories in the U.S. and the Canadian Standards Association. The receptacle accepts power cords fitted with the Belden type SPH-386 connector. Its GR part number is 4240-0210.

The associated power cord for use with the new receptacle is GR part no. 4200-9625. It is a 7-ft, 3-wire, 18-gauge unit with connector bodies molded integrally with the jacket. The connector at the power-line end is a stackable hammerhead design that conforms to the "Standard for Grounding Type Attachment Plug Caps and Receptacles," ANSI C73.11-1963.

2.4 EXTERNAL-DATA CONNECTIONS.

2.4.1 General.

Data inputs and outputs are provided at the rear panel (Figure 1-2). The following paragraphs identify the input and output signals and the pin connections. Both data connectors are 50-pin Amphenol type 57. No plugs and cables are provided for these connections. The corresponding plug (Cinch or Amphenol P/N 57-30500) is recommended for use with socket.

2.4.2 Data Output (Print Data).

The DATA-OUTPUT socket on the rear panel provides 11 digits of measurement data (5 for reactance, 5 for resistance or dissipation factor, and 1 for range), various system control inputs and outputs, and ground and logic-voltage references. A 50-pin Amphenol Type 57 connector provides the connection. Figure 2-2 identifies the pin connections for the various signals and gives pertinent data. Table 2-1 identifies the signals and their function.

Refer to Table 4-13 in paragraph 4.4.14 if further information about these signals is required. The following

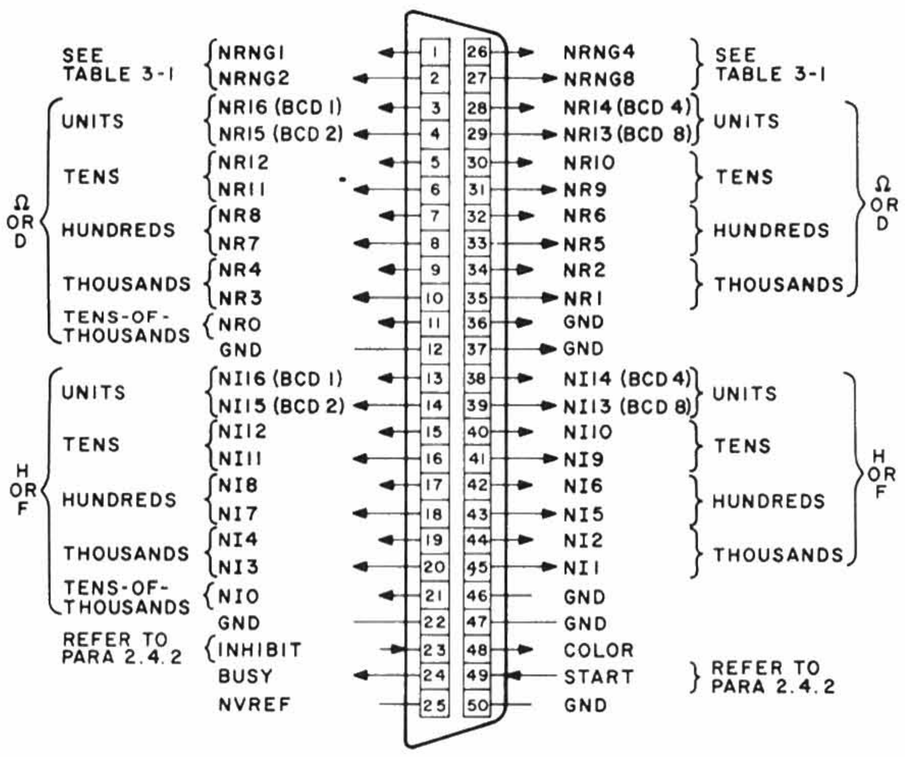

NOTE

If low-level board is installed, pin 23, INHIBIT, must be grounded for the bridge to operate.

Figure 2-2. DATA OUTPUT socket pin connections.

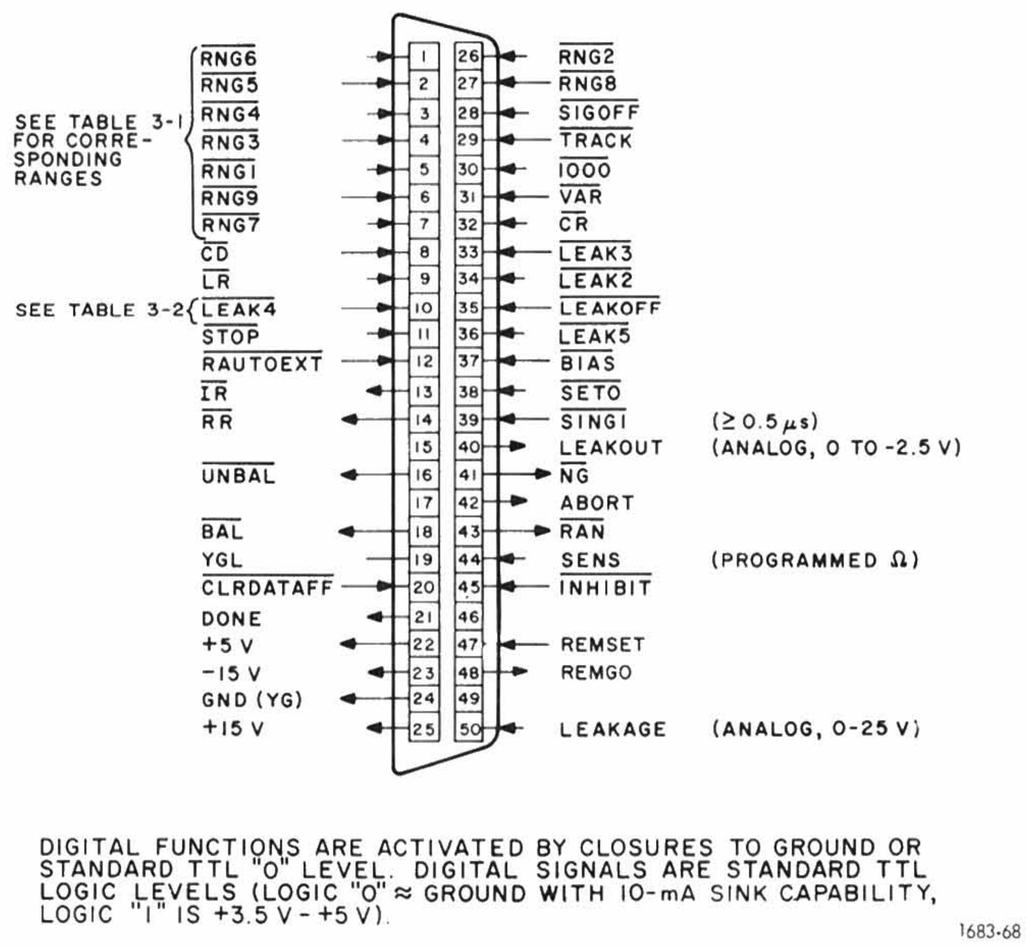

Figure 2-3. AUXILIARY socket pin connections.

2-2 INSTALLATION

File Courtesy of GRWiki.org

Table 2-1
MEASUREMENT DATA

Outputs	
Signals	**Function**
NRNG1, 2, 4, 8	Instrument range (1-9) in 1-2-4-8 BCD form.
NR0-NR16	Resistance or dissipation factor data in BCD form for five digits. NR13-16 (8-4-2-1) is the lowest digit. NRO is the highest ("Spillover", tens-of-thousands).
NIO-NI16	Capacitance or inductance data in the same form as above.
GND (all)	Ground reference.
COLOR	Change print color, bridge failed to balance.
BUSY	Start print, balance completed.
NVREF	Logical "1" (+5 V or +15 V) reference voltage (must not draw more than 50 mA).
Inputs	
START	Start balance operation.
INHIBIT	Inhibit stray start signals from occuring and ensure counters do not count while data is being recorded, or inhibit counters. Must be removed at start of balance operation for bridge to balance.

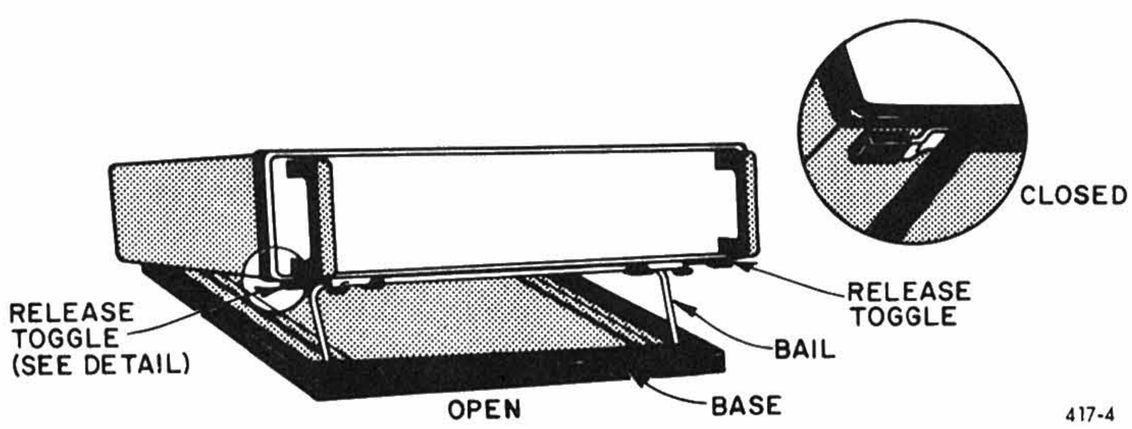

Figure 2-4. The bail can tilt the instrument for easy viewing of the front-panel indicators.

paragraphs give details on the START and INHIBIT signals.

START Signal. Unless the purchaser specifies otherwise, the data-out board is wired to accept a ±50-V maximum, ac- or dc-coupled START pulse that will start the instrument at the +5-V level of the positive-going transition of the signal. Ac-coupled signals must be greater the 8 V, peak. Both types of signals must have a duration of ***not less*** than 20 μs.

The user can obtain triggering levels of +5 V, +1.5 V or -5 V on the positive-going transition and +5 V, +1.5 V, or -5 V on the negative-going transition by resoldering a few anchor terminal connections on the board. Refer to the schematic diagram, Figure 6-17, for instructions.

INHIBIT Signal. The INHIBIT signal input is compatible with the type of board purchased for the instrument; that is, high-level or low-level data board. For high-level data, R13, a 1/4-W, 15-kΩ resistor is supplied with the board; there is no R12 on the board. For low-level data, R13 is removed and R12, the same value resistor as R13, is included. High-level or low-level INHIBIT signals can be used by interchanging R12 and R13.

Interchanging Data Logic Levels. The data-output board is normally provided for either high-level data or low-level data inputs and outputs, as specified by the purchaser. However, IC inverters are mounted in sockets and can be interchanged for high or low levels. Slight wiring changes are also required. Refer to Figure 6-17 for instructions if it is desired to change levels.

2.4.3 Data Input (Programming Signals).

The rear-panel AUXILIARY socket provides terminals for external remote programming for all control functions except line voltage. All digital functions are controlled by closures to ground or a standard TTL zero-volt "0" level. Figure 2-3 identifies the pin connections for the various signals. Analog-type signals (with the exception of power supply reference voltages) are identified in the figure. Table 2-2 lists a description of each signal. Refer to Tables 4-11 and 4-12 in paragraph 4.4.13 for further information, if necessary.

2.5 BENCH-MODEL MOUNTING.

2.5.1 Tilting.

The bench model is completely assembled in a metal cabinet, ready for bench use. A convenient bail on the bottom front edge of the instrument can be pulled down to raise the front for easy viewing of the front-panel indicators. (See Figure 2-4.)

To tilt the instrument, proceed as follows:

a. Place the right thumb on the right-hand release toggle and the left thumb on the left-hand release toggle under the front corners of the instrument.

b. Push both release toggles toward the rear as far as they will go.

File Courtesy of GRWiki.org

Table 2-2
PROGRAMMING SIGNALS

Inputs		Inputs	
Signals	**Function**	**Signals**	**Function**
$\overline{\text{RNG1}}$-$\overline{\text{RNG9}}$	Establish instrument measurement range from 1 to 9. (See Table 3-1.)	$\overline{\text{BIAS}}$	Disable internal bias source.
		$\overline{\text{SET0}}$	Set the readout displays to all zeros
$\overline{\text{SIGOFF}}$	Disable test oscillator when performing leakage-current measurement.	$\overline{\text{SING1}}$	Start measurement (pulse width must be greater than 0.5 μs but less than 50 ms.)
$\overline{\text{TRACK}}$	Hold main gates (E board) enabled, allowing displays to operate even if bridge is balanced (for stability measurements, etc.)	$\overline{\text{INHIBIT}}$	Inhibit start pulse and start-pulse (PVMR) generator.
		REMSET	For an external leakage current measurement. Provides a "1"-to- " REMGO signal if a "go" condition exists. Refer to para.3.19 for detai
$\overline{\text{CD}}$	Measure CsD.		
$\overline{\text{LR}}$	Measure LsRs.	LEAKAGE	Leakage reference signal in lieu of front-panel control. Zero-25 V, co responding to ratio V/10 for LEAK. level control setting. Refer to para. for further details if necessary.
$\overline{\text{CR}}$	Measure CsRs.		
$\overline{\text{LEAK2}}$-$\overline{\text{LEAK4}}$	Establish leakage ranges 10 μA to 10 mA. (See Table 3-2.)		
$\overline{\text{LEAKOFF}}$	Prevents leakage-current measurement from occuring if instrument is set for leakage-current measurement.		
$\overline{\text{STOP}}$	Inhibit counters and readout displays.		
$\overline{\text{RAUTOEXT}}$	Change range automatically (1683 in remote mode).		
YGL	Ground reference for monitoring LEAKOUT and for use with SENS input.		
SENS	Establish instrument sensitivity with programmable resistor connected between YGL and SENS. (See para. 3.11.)		
$\overline{\text{CLRDATAFF}}$	Clear 'DONE' signal. (See "Outputs.")		
$\overline{\text{1000}}$	Perform measurement with 1-kHz frequency.		
$\overline{\text{VAR}}$	Enable variable measurement rate mode (Items 20 & 21, Table 1-1).		
		Outputs	
		IR	Reverse reactance counter and display.
		RR	Reverse resistance and dissipation factor counter and display.
		UNBAL	Error is greater than eight counts.
		BAL	Bridge balanced (for indicator).
		DONE	Balance operation completed (send SING1 command).
		+5 V, −5 V, +15 V	Reference voltages (***Must not*** draw more than 50 mA).
		GND (YG)	Reference ground.
		LEAKOUT	Monitoring point for leakage voltage proportional to leakage current, 0-2.5 V, corresponding to full scale.
		NG	Indicates leakage-current acceptable
		ABORT	Indicates bridge has not balanced after a 3-s delay beyond last range change.
		RAN	
		REMGO	goes to "0" during a measurement of externally applied leakage curren if the established limit is acceptable

File Courtesy of GRWiki.org

c. Using the rear of the base as a pivot, lift the front of the instrument, permitting the bail to drop down on the base.

d. With one hand, hold the instrument in the tilted position; with the other, pull the bail forward as far as it will go and carefully lower the instrument. The bail is now locked in place and the instrument will remain in the tilted position.

Reverse this procedure to eliminate the tilt. Be sure the toggles are pushed back, toward the rear of the instrument. Then lower the front carefully onto the base. Lock the base to the bottom of the instrument by sliding the toggles forward.

2.5.2 Cabinet Removal.

To remove a bench-model instrument from its cabinet, remove the four panel screws (A, Figure 2-5). P/N 7270-6310, two on each side of the front panel. These are No. 10-32, 9/16-in. screws, with nylon washers. To loosen them, insert a Phillips-head screwdriver through the holes in the handles, as shown in the figure; pull the instrument forward, out of the cabinet.

2.5.3 Conversion to Relay-rack Mount.

To convert a bench model for relay-rack use, order from GR one Rackable Cabinet Assembly, P/N 4174-3744, and proceed as follows:

a. Disconnect all cables from the rear of the instrument, remove the four panel screws (A, Figure 2-5), and pull the instrument forward, out of the cabinet (refer to paragraph 2.5.2).

b. From the rear, remove the four screws (B) holding the rear cover (P/N 4171-8804) to the bench cabinet and remove the cover.

c. Proceed with the relay-rack installation, as given in paragraph 2.6.1.

2.6 RACK-MODEL MOUNTING.

2.6.1 Installation.

Relay-rack models of the 1683 are supplied with Rackable Cabinet Assembly, P/N 4174-3744, and Hardware Set, P/N 4174-2007. Table 2-3 lists the items in the set.

To install a rack-model instrument in an EIA standard RS-310 19-in. relay rack (see Figure 2-6), with universal mounting-hole spacing, proceed as follows:

a. Remove 4 dress-panel screws (A) and slide the instrument out of the cabinet; discard the nuts and washers. When free motion along the tracks is stopped, tilt the front of the instrument up slightly. Continue withdrawal, past the stops, pulling the instrument horizontally until it is free.

b. If the instrument has a rear cover, remove the 4 screws holding the rear cover to the rack cabinet and remove the cover.

c. Insert the rack cabinet wherever desired in the rack — be sure it's level — and fasten it with 4 screws (C) to the front rails.

d. If the rack contains a rear support rail, use brackets (D) to support the cabinet with the rear rails; open-slotted screws holes allow positioning.

e. Use the set of slots in the sides of the cabinet that allow alignment of the open-slotted holes in the brackets with threaded holes in the rail. The long flange should extend to the rear.

f. Insert screws (E) from inside the cabinet, through the slotted holes and drive them into the holes in the long flange of the bracket. Each side takes 2.

NOTE

Start the screws in the appropriate holes off the rack, to make the threading easier.

g. Pass screws (B) through brackets and screw 2 into each rear rail. (Details may be varied to suit particular situations.)

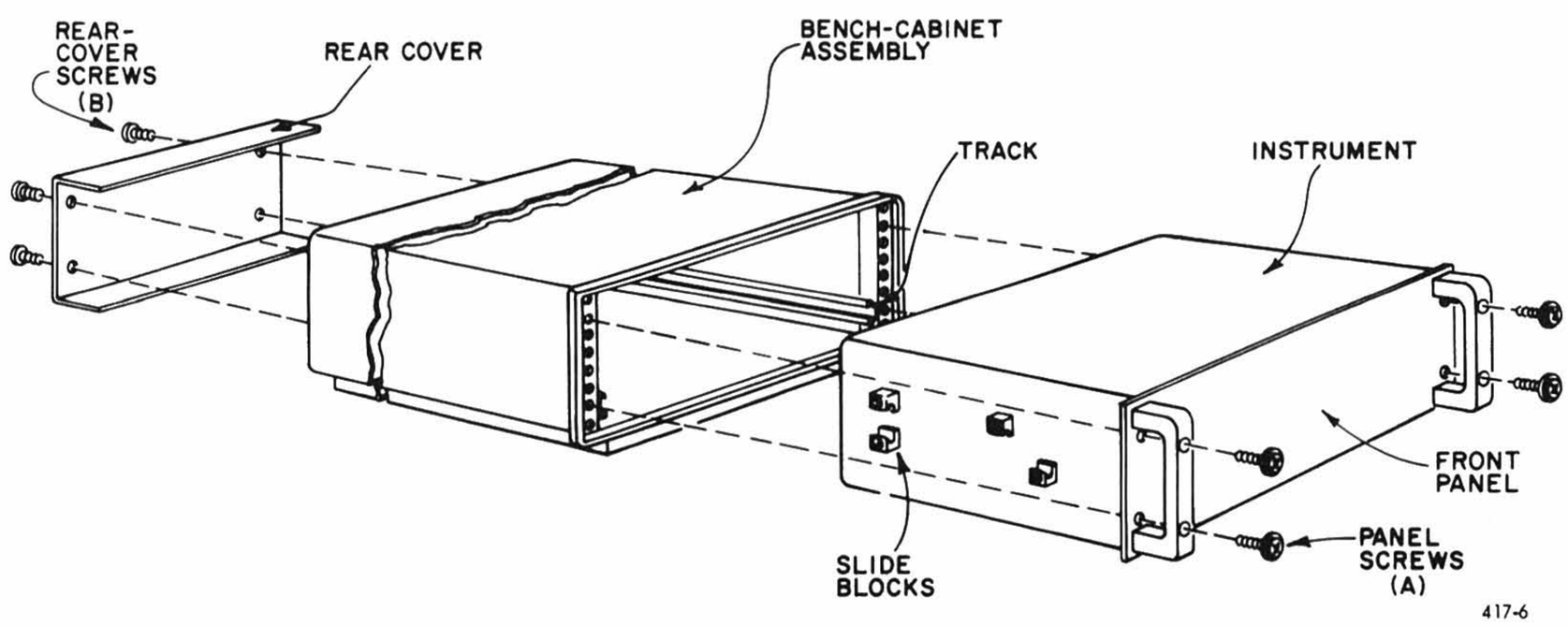

Figure 2-5. The bench model is easily removed from its cabinet.

File Courtesy of GRWiki.org

Table 2-3

RACK HARDWARE 4174-2007

Fig. 2-6 Ref.	Quantity	Item
D	2	L brackets with open-slotted holes.
E	4	Screws, 8-32, 3/16 in., thread forming.
C,B	8	Screws, 10-32, 1/2-in., thread forming.

h. To install the instrument, first set its rear edge in the cabinet front opening. Slide the instrument back, making sure that the rear and the upper front slide blocks engage the tracks. (Stops prevent further insertion.)

i. Pull the instrument forward ***with*** the tracks, keeping a hand on each side (fingers underneath). Slide the instrument ***back*** about ½-in. along both tracks, past the stops, by pressing down on the tracks (with thumbs) while tilting the front of the instrument up slightly.

j. Push the instrument back into the rack, checking for smooth operation of the tracks and slide blocks.

NOTE

The instrument is now readily accessible for behind-the-panel adjustments. It slides in and out freely on extending tracks.

k. Fasten the instrument in place, using 4 dress-panel screws (A). (Insert the screwdriver through holes in the handles.)

l. If applicable, replace the rear cover; use the 4 rear-cover screws.

2.6.2 Conversion to Bench Mount.

a. Disconnect all cables.

b. Remove the rear cover screws and remove the rear cover, if a cover is furnished with the instrument.

c. Remove the four panel screws (A, Figure 2-6) – two on each side of the panel. To loosen them, insert a Phillips-head screwdriver through the holes in the handles. (See Figure 2-6.)

d. Pull the instrument forward on the tracks and raise the front of it slightly; it will then slide free of the tracks.

e. Slide the instrument into the bench cabinet and lock it in place with the four front-panel screws, A.

f. If applicable, attach the rear cover to the back of the cabinet; use the four rear-cover screws.

2.7 LINE-VOLTAGE REGULATION.

The accuracy of measurements accomplished with precision electronic test equipment operated from ac line sources can often be seriously degraded by fluctuations in primary input power. Line-voltage variations of ±15% are commonly encountered, even in laboratory environments. Although most modern electronic instruments incorporate some degree of regulation, possible power-source problems should be considered for every instrumentation setup. The use of line-voltage regulators between power lines and the test equipment is recommended as the only sure way to rule out the effects on measurement data of variations in line voltage.

The General Radio Type 1591 Variac® Automatic Voltage Regulator is a compact and inexpensive equipment capable of holding ac line voltage within 0.2% accuracy for input ranges of ±13%. It will assure, for example, that an instrument rated for 100-125 (or 200-250) V can be operated reliably in spite of varying input voltages in the range 85-135 (or 170-270) V. The 1 kVA capacity of the 1591 will handle a rack full of solid-state instrumentation with no distortion of the input waveform. This rugged electromechanical regulator comes in bench or rack-mount versions, each with sockets for standard 2- or 3-wire instrument power cords.

Further details can be found in your GR catalog or in the *GR Experimenter* for October, 1967.

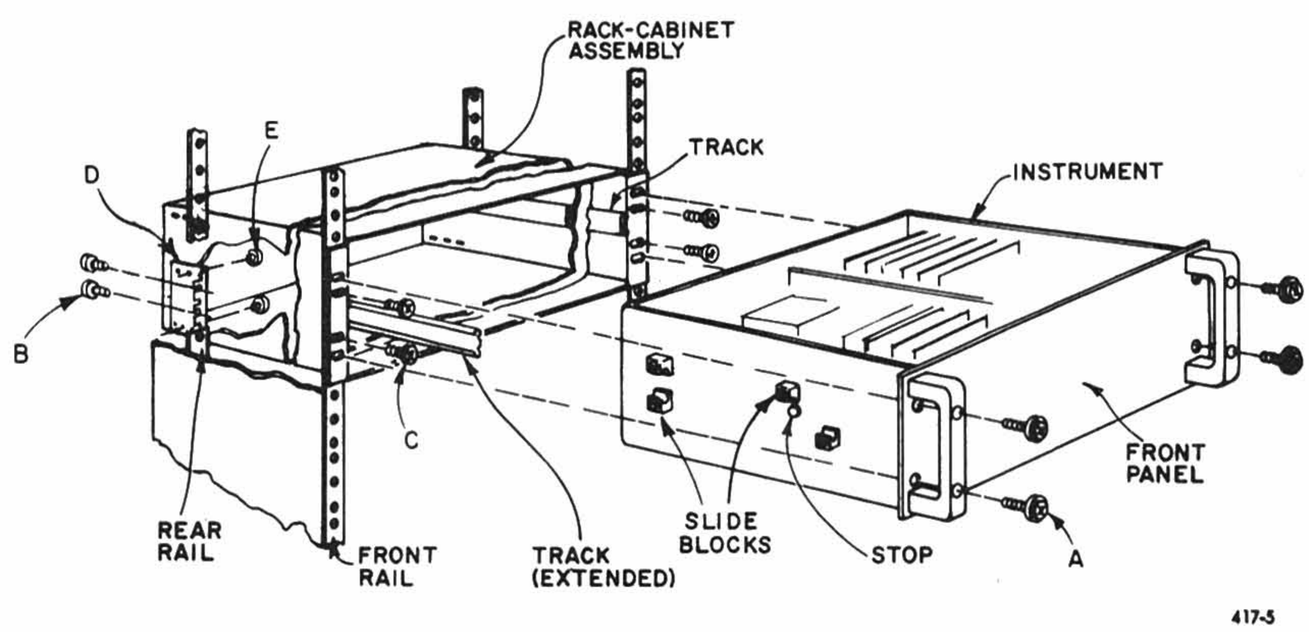

Figure 2-6. Method of mounting the relay-rack model.

2-6 INSTALLATION

File Courtesy of GRWiki.org

Operation–Section 3

3.1 CONNECTIONS 3-1
3.2 LINE VOLTAGE 3-2
3.3 RANGE SELECTION 3-2
3.4 RANGING TIME 3-4
3.5 MODE SELECTION 3-4
3.6 OSCILLATOR LEVEL (VOLTAGE ACROSS UNKNOWN) 3-4
3.7 SENSITIVITY CONTROL 3-6
3.8 BIASING THE UNKNOWN 3-6
3.9 LEAKAGE–CURRENT MEASUREMENT 3-6
3.10 MEASUREMENTS 3-7
3.11 REMOTE OPERATION 3-7
3.12 TURN–ON 3-8
3.13 OPERATIONAL CHECK 3-8
3.14 COMMON–MODE ERROR 3-8
3.15 CAPACITANCE TO GROUND 3-11
3.16 STRAY CAPACITANCE ADJUSTMENT 3-11
3.17 Q–FACTOR CONVERSION CHART 3-11
3.18 ACCURACY CHARTS 3-12
3.19 MEASURING EXTERNAL LEAKAGE CURRENT. 3-15

WARNING

To minimize electrical shock hazard, limit bias to 30 volts, maximum. For certain applications, under proper conditions, up to 600 volts can be used.

When bias voltages greater than 30 volts are used, exercise extreme care. Full bias voltage appears on front- and rear-panel connectors, at the ends of cables or fixtures attached to the terminals, and on the leads of the capacitor under test, when the rear panel BIAS control is set to EXT.

Capacitors remain charged after measurement. The operator must follow safe procedures to assure proper discharge of capacitors after measurement.

Do not leave the bridge unattended with external bias applied.

3.1 CONNECTIONS.

Make all connections before turning on the instrument. Connections for power, for externally programming the 1683, and for data outputs are described in Section 2.

Five-, four- and three-terminal connections can be made to the unknown. The following conditions determine the type of connection, and Figures 3-1 to 3-3 show typical connections for each condition. The cable is 4 feet long, and the accuracy of the bridge is specified to the ends of the cable (or test fixture). Refer to paragraph 3.14 if using different lengths of cable.

Use a five-terminal coaxial connection when measuring impedances in the middle or lower middle ranges (ranges 3 to 6; refer to Table 3-1) whose impedances might be affected by lead impedances and stray capacitance. Shielded or coaxial cables for impedances above the lower ranges (1 to 4) should be used to minimize errors due to stray capacitance, or to noise or other interference.

Use a three-terminal coaxial connection when measuring high impedances (ranges 6 through 9, Table 3-1) whose measurement might be affected by stray capacitance and not primarily by lead impedances. Figure 3-2 shows a typical connection. The ground connection shown can be the 1683 GUARD connection. Use two GR Type 874 Tees for the connection.

For measuring low impedances (ranges 1 through 4) where lead impedances will affect the measurement, the connection should be four-terminal. Low-loss wire can be used, but it must be twisted to prevent mutual inductance

File Courtesy of GRWiki.org

effects. The GUARD connection can be used if stray capacitance is suspected. Figure 3-3 shows a typical connection.

The use of separate potential and current terminals (four terminals) eliminates the error due to series impedance of the cables and maintains accuracy. The above connections are suggested, but the actual type of connection may depend on conditions determined by the user.

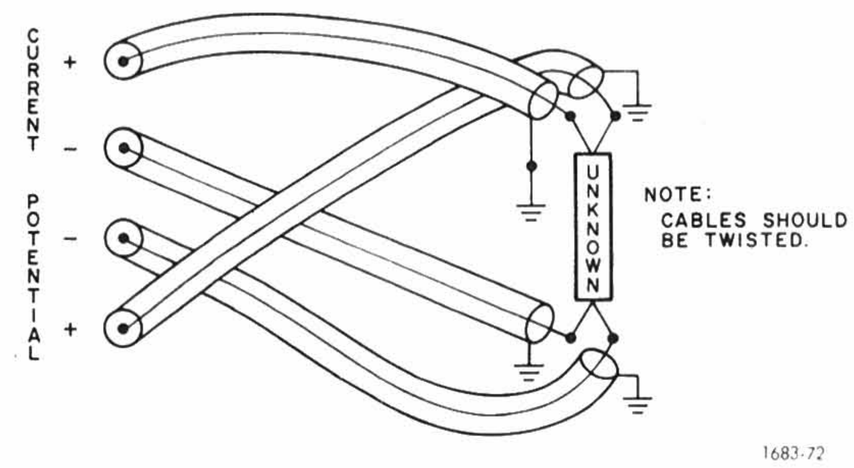

Figure 3-1. Five-terminal connection.

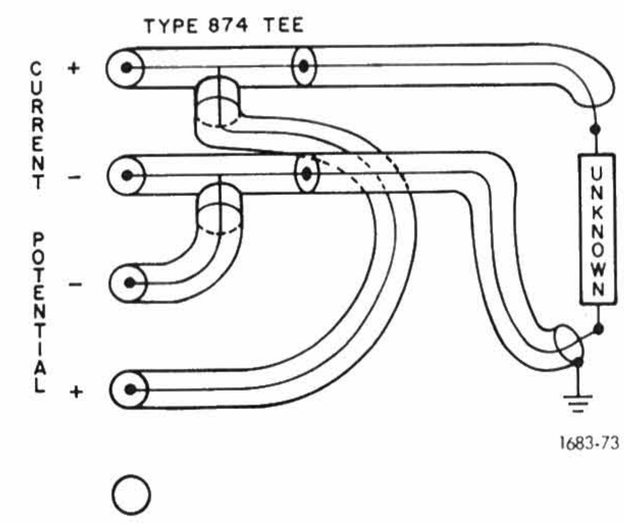

Figure 3-2. Three-terminal connection.

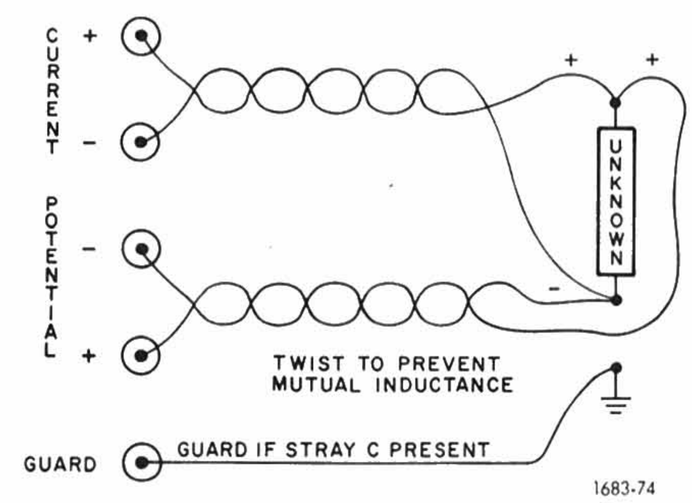

Figure 3-3. Four-terminal low-impedance connection.

3.2 LINE VOLTAGE.

The bridge oscillator is synchronized with the line voltage for 60-Hz line operation, to eliminate beating effects. If 50-Hz line voltage is used, the oscillator will try to run at 100 Hz and will introduce a beating effect. Therefore, when using a 50-Hz line voltage, disconnect the oscillator sync connection at anchor terminal 8 (AT8) on the mother board. Refer to Figure 5-1 for the location.

3.3 RANGE SELECTION

The range can be selected or changed even if the instrument is turned on, although it is better to select the range before turn-on. If the RANGE indicator lights during operation in a fixed (hold) range, this indicates a range change may be required.

Use the front-panel RANGE control (or remote equipment) to select the measurement range. Ranges 1-9 are fixed. The AUTO position will allow the instrument to range automatically through ranges 1-9. Table 3-1 lists the corresponding control ranges (maximum count) for CsD, CsRs and LsRs for each measurement frequency, 120 Hz and 1 kHz, and the accuracy associated with each range. Refer to the correction charts in paragraph 3.17, if necessary, for accuracy plots of the function being measured for the two measurement frequencies.

The bridge will measure most capacitive devices; the maximum capacitance that can be balanced is 0.2 F, the largest resistance 2 MΩ.

The maximum reading on each range is 19999, with the decimal point in the appropriate place (as shown in Table 3-1) for the range; each range starts at 00000 with the decimal point as shown in Table 3-1. The range selected should be determined by the larger of the two values; e.g., at 120 Hz, if Ls = 1 H (range 7) and Rs equals 25 kΩ (range 8), then range 8 should be selected. For capacitance, the capacitor value determines the range. The bridge will not balance if capacitors are "lossy" (D greater than 2).

Figures 3-10 to 3-13 also show the range limits. These charts plot the accuracy and, therefore, resolution obtainable for the measurement of an unknown(s) on one or more ranges. Tables 3-3 and 3-4, accuracy checks for each range, show in tabular form the specified accuracy in resolution (number of counts) for the ranges.

3.4 RANGING TIME.

At 1 kHz, the maximum time it will take to balance on one range is 0.1 s; at 120 Hz, 1.0 s. At each frequency 25 ms is required for a change of range. For example, to range through three ranges at 1 kHz requires two range changes (50 ms) and 0.2 s (maximum time) for a total of 0.25 s.

3.5 MODE SELECTION.

3.5.1 General.

The instrument can be operated for single measurement, a variable measurement rate, tracking, tests, or remote

File Courtesy of GRWiki.org

Table 3-1
INSTRUMENT RANGES

Range	CsRs		CsD		LsRs	
	120 Hz	1 kHz	120 Hz	1 kHz	120 Hz	1 kHz
1	199.99 mF 19.999 mΩ	19.999 mF 19.999 mΩ	199.99 mF 1.9999 D	19.999 mF 1.9999 D	19.999 μH 19.999 mΩ	1999.9 nH 19.999 mΩ
2	19.999 mF 199.99 mΩ	1999.9 μF 199.99 mΩ	19.999 mF 1.9999 D	1999.9 μF 1.9999 D	199.99 μH 199.99 mΩ	19.999 μH 199.99 mΩ
3	1999.9 μF 1999.9 mΩ	199.99 μF 1999.9 mΩ	1999.9 μF 1.9999 D	199.99 μF 1.9999 D	1999.9 μH 1999.9 mΩ	199.99 μH 1999.9 mΩ
4	199.99 μF 19.999 Ω	19.999 μF 19.999 Ω	199.99 μF 1.9999 D	19.999 μF 1.9999 D	19.999 mH 19.999 Ω	1999.9 μH 19.999 Ω
5	19.999 μF 199.99 Ω	1999.9 nF 199.99 Ω	19.999 μF 1.9999 D	1999.9 nF 1.9999 D	199.99 mH 199.99 Ω	19.999 mH 199.99 Ω
6	1999.9 nF 1999.9 Ω	199.99 nF 1999.9 Ω	1999.9 nF 1.9999 D	199.99 nF 1.9999 D	1999.9 mH 1999.9 Ω	199.99 mH 1999.9 Ω
7	199.99 nF 19.999 kΩ	19.999 nF 19.999 kΩ	199.99 nF 1.9999 D	19.999 nF 1.9999 D	19.999 H 19.999 kΩ	1999.9 mH 19.999 kΩ
8	19.999 nF 199.99 kΩ	1999.9 pF 199.99 kΩ	19.999 nF 1.9999 D	1999.9 pF 1.9999 D	199.99 H 199.99 kΩ	19.999 H 199.99 kΩ
9	1999.9 pF 1999.9 kΩ	199.99 pF 1999.9 kΩ	1999.9 pF 1.9999 D	199.99 pF 1.9999 D	1999.9 H 1999.9 kΩ	199.99 H 1999.9 kΩ

operation, by setting the front-panel mode switch to the appropriate position.

3.5.2 Single Measurement.

Set the mode control to SINGLE MEAS. When the START pushbutton switch is pressed, or a closure-to-ground for at least 0.5 μs is introduced at the EXT START connector (usually from a test fixture) or appropriate pin connection on the sockets on the rear panel, a single balance operation and leakage-current measurement (if leakage is being measured) will occur; the leakage measurement precedes the capacitive measurement.

3.5.3 Variable Measurement Rate.

Set the mode control to VARIABLE MEAS RATE and the FAST-SLOW-STOP control to control the time between measurements. This control can be turned on and adjusted after the instrument is started, if desired. The time between measurements can be adjusted from 20 ms (FAST) to 1 s (SLOW). If leakage current is being measured (determined by the leakage controls), the leakage measurement precedes a balance operation. The leakage measurement can be varied from 70 ms (FAST) to 10 s (SLOW). The balance operation will be varied accordingly. The STOP position will stop the count and inhibit further balances. The control also varies the test mode display count-rate.

Use the variable measurement rate mode, with the rate set accordingly when monitoring changes to parts under test for a period of time (such as stability or drift tests).

3.5.4 Tracking.

This mode can be used to monitor changes to a part under test over a period of time. A balance does not occur. The measurement rate can be varied by the VARIABLE MEAS. RATE control. It is recommended, however, that the variable measurement rate mode of operation, with the rate set accordingly, be used for monitoring or recording changes to parts under test over a period of time, because the bridge will balance in this mode. The tracking mode is usually for use when only very small changes in value occur.

3.5.5 Test Mode.

This mode allows a check of the counters and displays using the variable-measurement-rate generator on the program board (P, Figure 4-2) as the counter clock source. This can also be used to isolate malfunctions up to the reference circuit clock (SVCO), which normally drives the counters. Normally, this mode serves as a quick operational check of the counters and displays.

No part has to be under test for the displays to count in the test mode; they will count fully up or down in the range selected, or through all ranges if the RANGE control is set to AUTO, ensuring that the direction control circuitry or the P board (Figure 4-2); counters; displays; and, if in the automatic mode, range counter (E board) and range matrix circuitry (Z board) are operating properly. (Refer to Section 6.) Table 2-1 lists the function of each TEST position.

File Courtesy of GRWiki.org

If a balance operation fails under normal operation, use this mode to check the operation of circuits mentioned above. If a balance is obtained in the TEST mode 5 or 6 with a standard, then the failure to balance may be ralated to the SVCO clock. If the bridge will not balance, then the unit must be malfunctioning. Refer to paragraph 5.12 if this occurs.

3.6 OSCILLATOR LEVEL (VOLTAGE ON UNKNOWN)

The oscillator is a 2.2-V, rms, voltage source with a 1-Ω source impedance.

Set the OSCILLATOR LEVEL to the ac level desired. In ranges 1 and 2 keep the voltage as high (2.2 V) as possible to prevent slower balance times from occurring due to sensitivity at the lower ranges. Also, if the voltage on the unknown is decreased from the maximum (2.2 V), bridge sensitivity may decrease, so that bridge resolution may be greater than ±1 count.

When measuring nonlinear devices, such as inductors or capacitors, use a low voltage and/or decrease the SENSITIVITY level to prevent changes in value. This minimizes the nonlinear effects and allows the bridge to balance. For tantalum or polarized capacitors, the bias may be necessary to prevent reversal of polarity caused by the ac signal.

Since the oscillator signal source has an output impedance of 1 Ω, the voltage on the unknown will be a function of the unknown impedance in the lower ranges (1-3). Figures 3-4 to 3-7 show the change in voltage on the capacitive or resistive unknowns, with the OSC LEVEL control set to 1 V, open circuit.

Adjust the OSCILLATOR LEVEL accordingly, if necessary. Multiply the voltage value shown on the charts to the setting of the OSCILLATOR LEVEL control to obtain the voltage on the part.

3.7 SENSITIVITY

Adjust the SENSITIVITY control for the desired sensitivity. Refer to Table 1-1 for more information on this control, if necessary. Also, refer to paragraph 3-6 for information concerning the measurement of nonlinear devices.

In nonlinear devices, harmonic distortion may be created. Also, in some cases the bridge may not balance because the error signal cannot be completely nulled, due

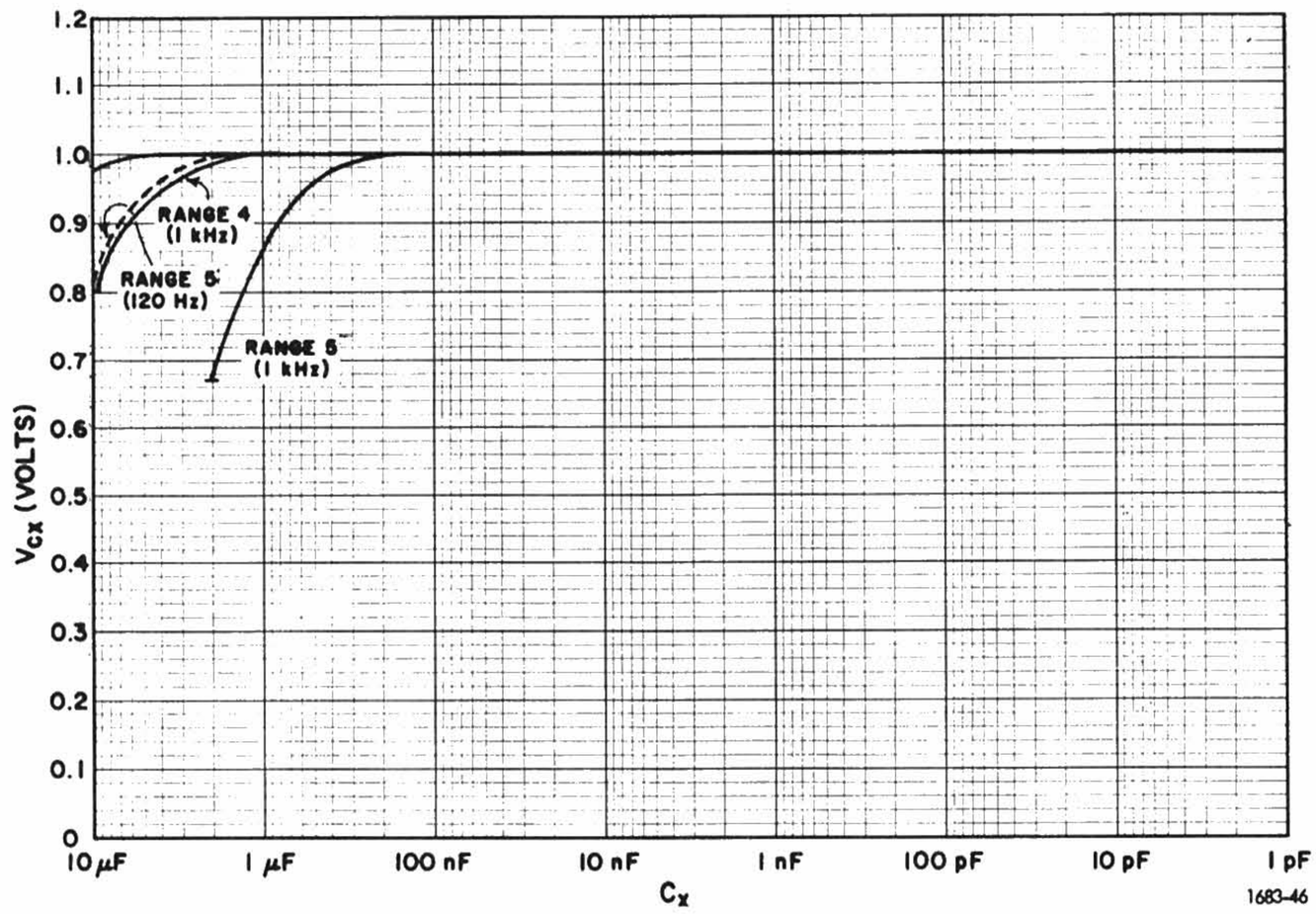

Figure 3-4. OSC LEVEL voltage across various values of unknown C_X.

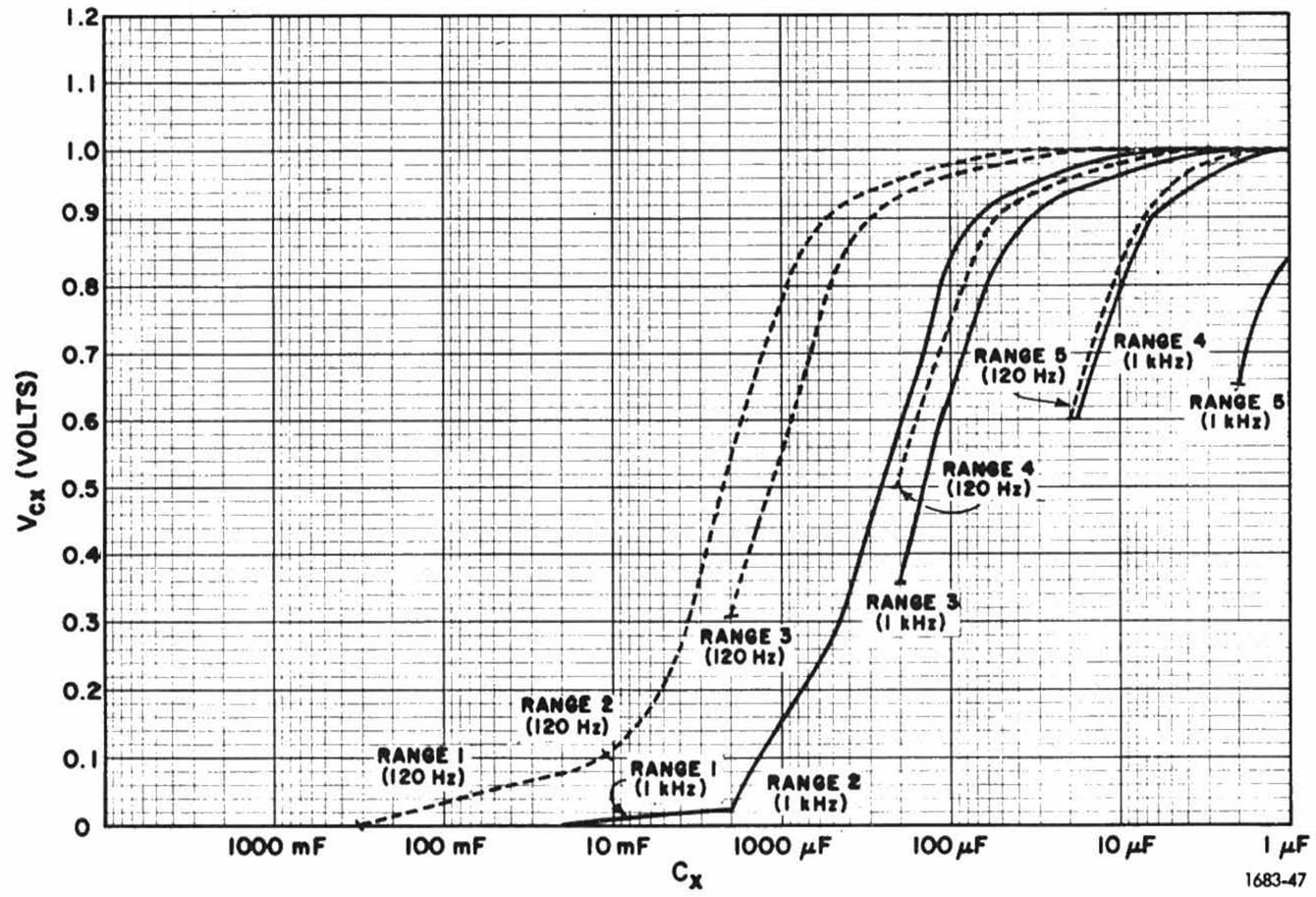

Figure 3-5. OSC LEVEL voltage across various values of unknown C_X.

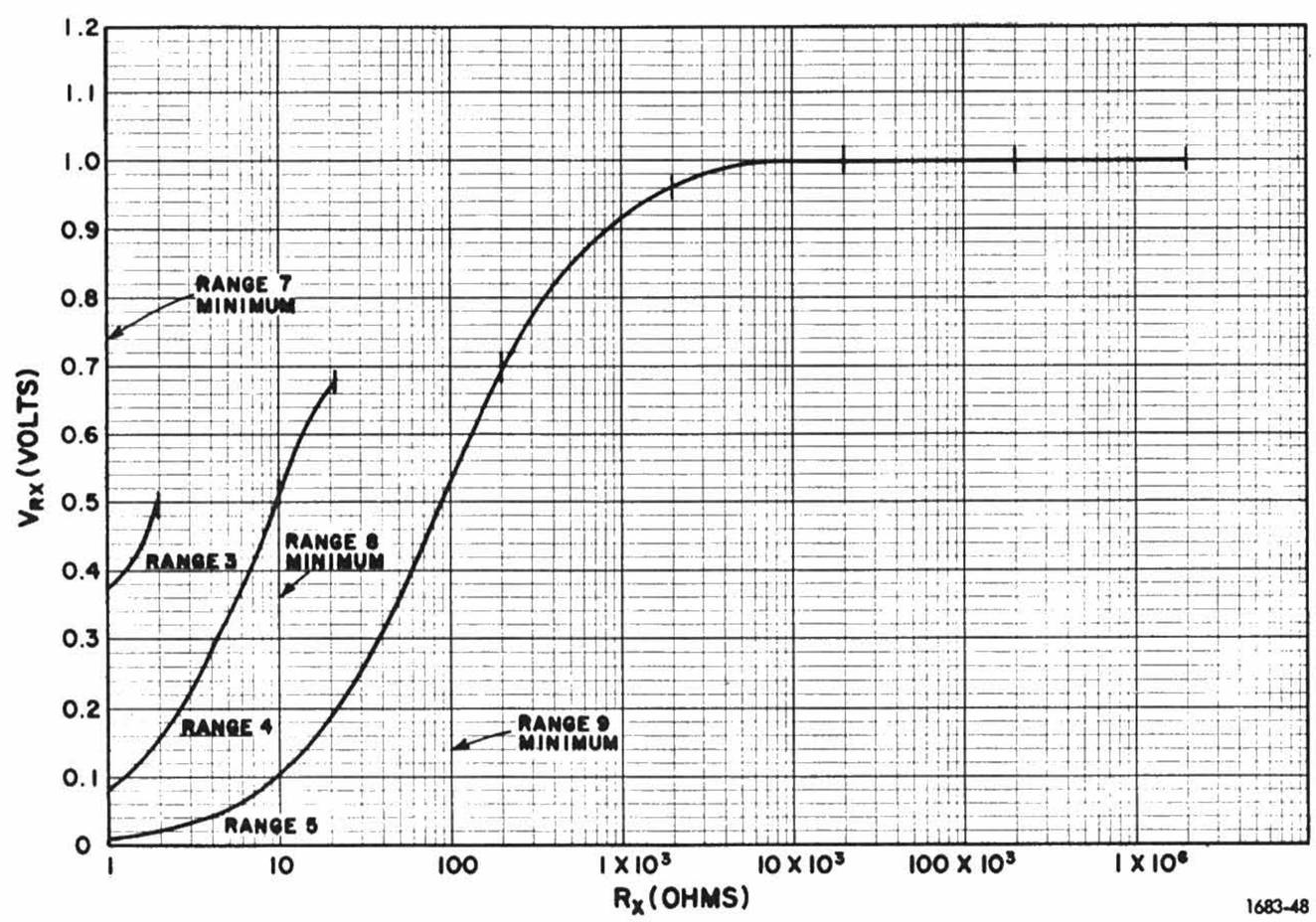

Figure 3-6. OSC LEVEL voltage across various values of unknown R_X.

File Courtesy of GRWiki.org

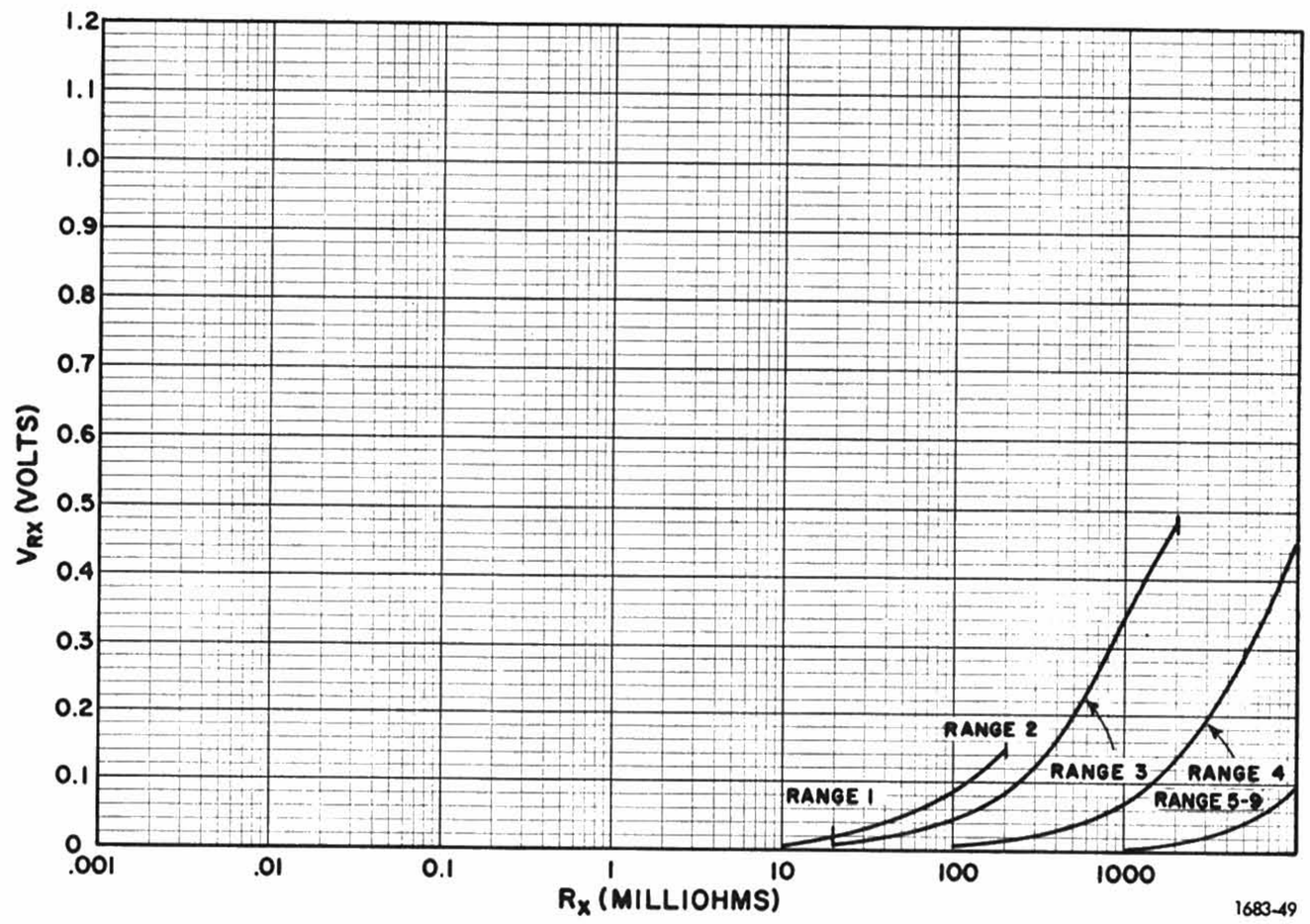

Figure 3-7. OSC LEVEL voltage across various values of unknown R_X.

to noise or signal pickup on the error signal. Twisted leads are used to avoid or minimize this problem. However, if the bridge fails to balance because of this situation, the trouble can be overcome in most cases by reducing the sensitivity. This reduces resolution, which is usually not meaningful for nonlinear components. That is, instead of being ±1 count, it will be +*N* counts, depending on the setting of the control.

For remote programming of the sensitivity level, refer to paragraph 3-11.

3.8 BIASING THE UNKNOWN.

Set the BIAS control for the desired biasing voltage for capacitors; make sure the control is set to OFF when measuring inductors.

WARNING

Observe the warning specified on page 3-1 when using a higher external bias voltage or when handling charged capacitors; the bridge does not discharge charged capacitors.

For a higher bias voltage (up to +600 V), connect a power supply (preferably low-dc current) to the rear-panel BIAS connectors and set the rear-panel BIAS control to EXT; use a screwdriver. The –BIAS connection must be at 0 V.

3.9 LEAKAGE–CURRENT MEASUREMENT.

The leakage-current measurement precedes a balance operation and can be made in the CsRs or CsD mode.

Set the leakage range control to the desired current range. Table 3-2 lists the ranges.

Accuracy is 2% except on the 1-μA range, where accuracy is less for lower currents. The continuously adjustable 0-2.5 control adjusts the current over the selected range. From 0.1 to 2.5 the setting corresponds to a multiple of the current range.

If the leakage current is acceptable within the time period selected, the GO indicator will light as soon (after 80 ms) as the current reaches the established limit, and a balance operation will start right after the GO indication. If a GO indication does not occur, the balance operation will start after the established time period.

The leakage function can be controlled externally. Refer to paragraphs 2.4, 4.4.13 and 4.4.6 for details.

A voltage proportional to the current (0 to -2.5 V) can be monitored with an oscilloscope at pin 40 of the rear-panel AUXILIARY socket. The start of the leakage measurement can be monitored at a test point on the N board. Thus the signal can be measured with a meter, or the

Table 3-2
LEAKAGE RANGES

Switch Position	Range
1 μA	0.1 - 2.5 μA
10 μA	1.0 - 25 μA
100 μA	10 - 250 μA
1 mA	0.1 - 2.5 mA
10 mA	1.0 - 25 mA

File Courtesy of GRWiki.org

time period can be accurately monitored, with the oscilloscope synchronized with the start-leakage-current signal ($\overline{\text{PLEAKOFF}}$).

3.10 MEASUREMENTS.

3.10.1 Capacitance and ESR (CsRs).

Set the function control to CsRs. If the optional C-divider board is installed in the instrument, ESR will be displayed concurrently with the capacitance reading.

There is lower sensitivity on the ESR and dissipation-factor reading, when measuring capacitance that is less than full scale. ESR sensitivity is defined as (capacitance reading divided by capacitance full scale)^2 times the capacitance sensitivity. The D sensitivity is defined as capacitance reading divided by capacitance (full scale) times the capacitance sensitivity. Figure 3-14 is an accuracy chart showing the number of counts of error of loss versus the number of counts, or reading, of capacitance.

A charged or short-circuited capacitor can be connected to the bridge without damaging the bridge.

WARNING

Observe the warning on page 3-1 when using external bias or when handling charged capacitors. The bridge does not discharge capacitors after measurement.

If an error is suspected on the two upper ranges (8 and 9) and an operational check (paragraph 3.13) was not performed before operation, it is likely that stray capacitance is present across the unknown. Refer to paragraph 3.13 to remedy this condition.

3.10.2 Capacitance and/or Dissipation Factor (CsD).

Set the function control to CsD. Voltage on the unknown is constant for capacitance up to 1 μF. (Refer to paragraph 3-6.) Charged or short-circuited capacitors can be put on the bridge without damaging it. When capacitors are charged, however, observe the warning specified above.

With a higher dissipation factor (above 1.0), the convergence may be slow. The bridge will not converge for a dissipation factor greater than 2.0.

3.10.3 High-Dissipation-Factor Capacitors.

When the capacitance display reads 00XXX (last three digits are any number), the bridge will uprange. It will downrange when the display reads 19999. If capacitance with a high dissipation factor is being measured and the capacitance display reads less than full scale, the balance time may take longer.

3.10.4 LsRs.

To measure inductance with series resistance, or to measure a resistor alone, set the function switch to LsRs. Make sure the BIAS control is turned to OFF when measuring inductors, except as noted in paragraph 3.6, when nonlinearity effects might be present. The bridge will

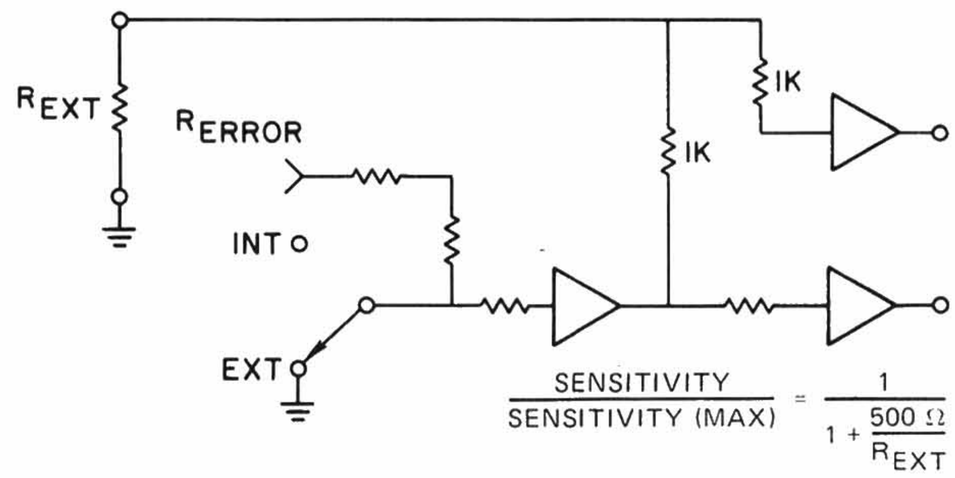

Figure 3-8. Sensitivity equivalent circuit.

uprange (if in AUTO range mode) when either display reads 19999 and is counting forward and range downward when both sides read 00XXX and are reversing.

On higher resistance ranges, shunt capacitance may prevent bridge from balancing. If this occurs, add in capacitance by adjusting J-R27 on the rear panel until the bridge balances.

Some inductance and/or resistance values may not balance if the oscillator level is too high. This condition is indicated by the RANGE lamp being illuminated on a seemingly correct range. If this occurs, lower the oscillator level. Also, the bridge may not balance for higher resistance values, due to the presence of stray capacitance. This is also indicated by the RANGE lamp being illuminated when the bridge stops attempting to balance. Refer to para. 3.16 if this occurs.

3.11 REMOTE OPERATION.

For remote programming and recording data, make the desired connections described in paragraph 2.4 to the rear-panel data connectors; data for recording is always available at the rear-panel DATA-OUTPUT socket (if provided), regardless of switch positions.

If remotely programming the 1683, set the applicable controls to the REMOTE position.

When recording data, the instrument should be set to the SINGLE MEAS mode (although this may not be necessary if sufficient time is allowed after a balance to allow the data to be recorded). Start pulses from an external source (usually a printer) can be applied to pin 49 of the DATA-OUTPUT socket to start a new balance after data is recorded, or a balance can be initiated at the front-panel after data is recorded.

The start of a balance can also be initiated with a start pulse introduced at pin 39 of the AUXILIARY socket, by remotely programming the start of a balance.

The sensitivity can also be programmed externally by a programmed resistor connected across pins 44 and 19 of the AUXILIARY socket. Figure 3-8 shows the equivalent circuit.

Use the formula in Figure 3-8 to obtain the desired sensitivity if remotely programming sensitivity. Maximum sensitivity, 1, requires an infinite or very large resistance. Approximately 500 Ω equals 0.5 sensitivity, etc.

File Courtesy of GRWiki.org

3.12 TURN-ON.

To manually turn on the 1683:

a. Set the POWER switch to POWER. The frequency, units, numerical and UNBALANCED indicators should light; the GO or NO GO indicator will be lit if leakage current is to be measured.

b. Press the START pushbutton switch or initiate operation with the device connected to the EXT START connector. (Refer to paragraph 3-11 if in remote operation.) If measuring leakage current, the NO GO indicator should be illuminated until the GO indicator lights, indicating an acceptable current. If the 1683 is in the SINGLE MEAS mode, press the START button or fixture again after a balance is obtained. If in the VARIABLE MEAS RATE mode, the instrument will automatically continue to balance at a rate determined by the FAST-STOP-SLOW control.

c. Adjust the VARIABLE MEAS RATE, BIAS, SENSITIVITY and OSC LEVEL controls as necessary; the LEAKAGE controls can also be adjusted during operation.

d. If in "hold range" operation and the RANGE indicator lights, this indicates the part under test may be of a value in another range; change the range if necessary or desired.

If in the automatic ranging mode, the numerical displays should sequence through the ranges (if necessary) until a balance is achieved. Also, see the note in Figure 2-2.

3.13 OPERATIONAL CHECK.

If it is desired to check the instrument before operation, use the mode switch TEST positions to exercise the displays and counters; refer to paragraph 1.3. If it is desired to check accuracy, proceed as follows. First check for stray capacitance:

a. Connect the coaxial cables as follows:

+ CURRENT to + POTENTIAL
– CURRENT to – POTENTIAL

b. Set the function control to CsD 1 kHz, RANGE switch to 9, mode switch to SINGLE MEAS, OSCILLATOR LEVEL to the maximum position and press the START switch.

c. Observe that the reactance display reads all zeros and the UNBALANCED lamp is off. If not, adjust the rear-panel adjustment J-R27 until the displays read all zeros and the UNBALANCED lamp is off. If stray capacitance above 2 pF is present, refer to paragraph 3.16. The RANGE lamp may be lit; this is normal.

d. Set the RANGE switch to 8 and connect a 1000-pF Reference Standard Capacitor (GR P/N 1404-9701) to the bridge (three-terminal connection).

e. Press the START switch and observe that the F display reads as indicated in Table 3-3. Perform the checks for the other ranges listed, as desired. The reading should be as listed. For 120-Hz checks, switch up one range (except 9, which is the same) and observe the same reading as the previous range. Below range 6, use the terminal connections described in paragraph 3.1 (five-terminal on ranges 3-6; four-terminal, twisted, low-loss wire on ranges 1-4 for the conditions described).

The accuracies listed in Table 3-3 and 3-4 ***do not*** include the accuracy of the standards, which must be added to the readings. The bridge readings must be within the count specified of the standards. Refer to Table 1-4 for the accuracy of GR standards. The actual value of any standard may differ from the nominal value because of the effects of temperature, aging and residual lead impedance; inductance; and stray capacitance of the leads and connections to the bridge. Therefore, it is advisable to measure the standards on a precision bridge such as the GR Type 1615 Capacitance Bridge (basic accuracy .01%), using the same setup and cabling as that intended for use with the 1683. Also include the settable accuracy of any variable capacitor used.

f. Set the function switch to LsRs.

g. Set the RANGE switch to the ranges listed in Table 3-4. At each range connect the indicated GR Type 1440 Standard Resistor, or equivalent, or a resistive standard and then a GR Type 1482 Standard Inductor, or equivalent. The readings are listed for a 120-Hz and 1-kHz frequency. The H readings are shown for 1 kHz. For H at 120 Hz, switch down one range and use the same inductive standard. The accuracy should be the same.

Refer to paragraph 5.11, if it is desired to check the ladder networks on the divider boards for the accuracy of the resistor ratios that determine the accuracy of the bridge. This check verifies sequentially every ratio and, therefore, the divider linearity, verifying the accuracy of every possible count. This check should only be necessary when trouble is suspected, or performed periodically.

3.14 COMMON MODE ERROR.

A slight error is introduced by the inability of the Y-board differential amplifier that is connected to the bridge terminals to subtract out or perfectly reject common mode signals (signals common to both of the amplifier's terminals). The following formulae can be used to determine the common mode error. When cables other than those supplied with the 1683 are used, the error introduced may reduce the specified bridge accuracy. This error is included in the specified bridge error. Substitute the values given in Tables 3-5 and 3-6 for the terms in the equations for the applicable bridge range.

In the formulae, $C_{MR} + jC_{MI}$ is the common mode gain of the amplifier. C_{MR} is the real part and C_{MI} the imaginary part.

The worst case common mode gain is

$$C_{MR} \leqslant \pm 10^{-4}$$

$$C_{MI} \leqslant \pm 10^{-4}$$

File Courtesy of GRWiki.org

Table 3-3
CAPACITANCE, DISSIPATION FACTOR, AND ESR ACCURACY CHECK

Range 1 kHz	Range 120 Hz	Value of Capacitor (Unknown) with Recommended GR Standard (Catalog No.)	F Display Reading*	D Display Reading*
			F-display reading can be ±1 count of Reading **	
● 8	9	1000 pF, 1404-9701	1000.0 pF ±10 counts If this reading is not obtained, perform the following adjustment(s). For 1 kHz, adjust C12, C13, and C14 (either one, two or all three) on the mother board, to obtain a reading as close to 1000.0 pF as possible (C12 and C13 adjusted by substituting similar but different value capacitors). For an incorrect reading at 120 Hz, adjust either C10 or C11 or both (by substituting similar but different value capacitors).	≤0.0003
		Set the function switch to CsRs. (To be performed only if option 4, ESR, is included in instrument)		
8	–	1000 pF, 1404-9701	1000.0 pF ±10 counts	≤000.03 (Ω display)
		Set the switch back to CsD.		
● 9	–	100 pF, 1404-9702	100.00 pF ±10 counts	≤0.0003
● 7	8	.01 μF, 1409-9712	10.000 nF ±10 counts	≤0.0003
6	7	0.1 μF, 1409-9706	100.00 nF ±10 counts	≤0.0003
● 5	6	1.0 μF, 1409-9725	1000.0 nF ±10 counts	≤0.0003
4	5	10 μF, 1424-9701	10.000 μF ±10 counts	≤0.0003
● –	4	100 μF, 1417-9700	100.00 μF ±10 counts	———
–	3	1000 μF	1000.0 μF ±10 counts	———
			F-display readings can be ±10 counts of Reading	
–	2†	10 mF	10.000 mF ±100 counts	<0.1000
			F-display reading can be ±100 counts of Reading	
–	1†	100 mF	100.00 mF ±500 counts	<0.1000
		Capacitor and Resistor Connect the decade in series with the capacitor; check residual D.	F-display reading can be ±1 count of Reading ** Set the decade to all zeros first and measure capacitance. Note the capacitance and D reading	Accuracy of D shown can be ±0.001, Rs ±10 counts.
● 7	–	.01 μF, 1.592 kΩ (Type 1433-J)	10.000 nF ±10 counts	ΔD 0.1000 D ±10 counts†
		Set the function switch to CsRs.	10.000 nF ±10 counts	ΔR 01.592 kΩ ±16 counts‡
● –	7	0.1 μF, 1.3263 kΩ (Type 1433-W)	100.00 nF ±10 counts	ΔR 01.326 kΩ ±13 counts‡
		Set the function switch to CsD.	100.00 nF ±10 counts	ΔD 0.1000 D ±10 counts†

* Accuracies listed *do not* include the accuracy of the standards. Refer to Table 1-4 for the accuracy of GR standards, if used.
** For example, F-display reading can be ±1 count of reading means 1000.0 pF ±10 counts can be 11 counts from actual value.
† On extreme low-impedance ranges, a nonlinear component under test may prevent the UNBALANCED lamp from extinguishing and subsequently prevent a balance. This can be eliminated by decreading the SENSITIVITY, with a subsequent loss in accuracy.
● Minimal recommended check points.

3-8 OPERATION

File Courtesy of GRWiki.org

Table 3-4
INDUCTANCE AND RESISTANCE ACCURACY CHECK

Range** 120 Hz	Value of Resistor (Unknown) with Recommended GR Standard (Catalog No.)	Ω Display Reading*	Value of Inductor (Unknown) with Recommended GR Standard (Type No.)	H Display Reading*
		Accuracy ±(0.1% + 1 count) Counts of Reading		Accuracy ±2 Counts of Reading
9	1440-9661, 1 MΩ	1000.0 kΩ ±10 counts	Suitable 100-H standard	100.00 H ±10 counts
8	1440-9651, 100 kΩ	100.00 kΩ ±10 counts	1482-T, 10 H	10.000 H ±10 counts
7	1440-9641, 10 kΩ	10.000 kΩ ±10 counts	1482-P, 1 H	1000.0 mH ±10 counts
● 6	1440-9631, 1 kΩ	1000.0 Ω ±10 counts	● 1482-L, 100 mH	100.00 mH ±10 counts
● 5	1440-9621, 100 Ω	100.00 Ω ±10 counts	● 1482-H, 10 mH	10.000 mH ±10 counts
● 4	1440-9611, 10 Ω	10.000 Ω ±10 counts	● 1482-E, 1 mH	1000.0 μH ±10 counts
● 3	1440-9601, 1Ω	1000.0 mΩ ±10 counts	1482-B, 100 μH	100.00 μH ±10 counts
		Accuracy ±(5% + 100 counts) Counts of Reading		Accuracy ±20 Counts of Reading
2†	Suitable 100-mΩ standard	100.00 mΩ ±100 counts	Suitable 10-μH standard	10.000 μH ±100 counts
1†	Suitable 10-mΩ standard	10.000 mΩ ±500 counts	Suitable 1-μH standard	1000.0 nH ±500 counts

* Accuracies listed *do not* include the accuracy of the standards. Refer to Table 1-4 for the accuracy of GR standards, if used.
**** On ranges 8 and 9 cancel out any stray capacitance that is present. Refer to para. 3.16 for the adjustment procedure.**
† On extreme low-impedance ranges, a nonlinear component under test may prevent the UNBALANCED lamp from extinguishing and subsequently prevent a balance, this can be eliminated by decreasing the SENSITIVITY, with a subsequent loss of accuracy.
● Minimal recommended check points.

Table 3-5
RESISTANCE AND INDUCTANCE VALUES FOR COMMON-MODE ERROR

Range	R_{STD} (Ohms)	R_{RLY} (Ohms)	R_{LEADS} (Ohms; 4 ft., 10 mΩ/ft)	ΣR (Ohms)	L_{STD} (μH)	L_{RLY} (μH)	L_{LEADS} (μH; .075 μH/ft)	ΣL (μH)
9	100	0.10	0.04	100.14	0.2	0.2	0.3	0.7
8	100	0.10	0.04	100.14	0.2	0.2	0.3	0.7
7	100	0.10	0.04	100.14	0.2	0.2	0.3	0.7
6	100	0.05	0.04	100.09	0.2	0.1	0.3	0.6
5	100	0.05	0.04	100.09	0.2	0.1	0.3	0.6
4	10	0.05	0.04	100.09	0.1	0.1	0.3	0.5
3	1	0.05	0.04	1.09	0.1	0.1	0.3	0.5
2	0.10	0.01	0.04	0.15	0.01	0.1	0.3	0.41
1	0.01	0.01	0.04	0.06	0.01	0.1	0.3	0.41

File Courtesy of GRWiki.org

Table 3-6
VALUES OF ωL

Range	R (Ohms)	L (μH)	ωL 120 Hz (mΩ)	ωL 1 kHz (mΩ)
9	100.14	0.7	0.5	4.0
8	100.14	0.7	0.5	4.0
7	100.14	0.7	0.5	4.0
6	100.09	0.6	0.4	3.0
5	100.09	0.6	0.4	3.0
4	10.09	0.5	0.3	2.5
3	1.09	0.5	0.3	2.5
2	0.15	0.41	0.25	2.0
1	0.06	0.41	0.25	2.0

In the formulae, Σ_R equals the sum of the resistance of the standards (R_{STD}), resistance of the 4-foot coaxial cable (R_{LEADS}), and the Y-bridge board relay resistance (R_{RLY}), the resistance of any other leads used can be used for the R_{LEADS} term.

Σ_L equals the sum of the inductance of the standards (L_{STD}), inductance of the relay (L_{RLY}), and coaxial leads (L_{LEADS}). The common mode error can vary with frequency.

Tables 3-5 and 3-6 list the values of ΣR, ΣL, $\Sigma\omega L$ at 120 Hz, and $\Sigma\omega L$ at 1 kHz for each range. The formulae are:

For resistance and ESR

$$R_o = R_x + \overbrace{C_{MR}\ \Sigma R + C_{MI}\ \Sigma\omega L}^{\text{Error}}$$

For inductance

$$L_o = L_x + \overbrace{C_{MR}\ \Sigma L + \frac{C_{MI}\ \Sigma R}{\omega}}^{\text{Error}}$$

For capacitance

$$C_o = C_x\left[1 + \overbrace{C_{MI}\ \omega\ C_X\ \Sigma R + C_{MR}\ \omega\ C_x\ \Sigma\omega L}^{\text{Error}}\right]$$

For dissipation factor

$$D_o = D_x\left[1 + \omega C_x\left(C_{MI}\ \Sigma R + C_{MR}\ \Sigma\omega L\right)\left(1 + \frac{C_{MR}\ \Sigma R + C_{MI}\ \Sigma\omega L}{R_x}\right)\right]$$

3.15 CAPACITANCE TO GROUND.

Every 160 pF of stray capacitance to ground from the low terminals causes a .01% error in the quadrature term, so that when measuring capacitance, a dissipation factor error is produced, an inductance measurement produces a resistance error, or a resistance measurement produces an error for inductance.

3.16 STRAY CAPACITANCE ADJUSTMENT.

The procedure in paragraph 3.13 describes how to check for stray capacitance and to eliminate stray capacitance up to 2 pF. If the capacitance exceeds this, it can be eliminated with a variable capacitor connected between the rear-panel STRAY C COMPENSATION BNC jack and the –CURRENT terminal for a gross adjustment and by the rear-panel J-R27 adjustment for fine adjustment. Connect the variable capacitor between the above described terminals using a GR Type 874 Tee at the –CURRENT terminal. If the overall amount of stray capacitance is generally known, a capacitor within 2 pF of the value can be used and the remainder trimmed out using adjustment J-R29.

Set the function control to CsD, mode switch to VARIABLE MEAS RATE, RANGE switch to the measurement range, and press the START switch. Adjust the variable capacitor and J-R27 until the displays read all zeros and the UNBALANCED lamp is off. Measurements can now be made.

If always making measurements on one range and stray capacitance is present in the setup, the stray capacitance can be removed by replacing capacitor C17 on the mother board (see Figure 5-1 for the location) with a similar-type capacitor ceramic tubular or mica), having the amount of stray capacitance added to its original value. (Refer to the Parts List.)

3.17 Q FACTOR CONVERSION CHART.

Figure 3-9 is a conversion chart showing circuit Q factor relationship to the number of counts of Ω versus number of counts of H at a 1 kHz frequency. The Q at 120 Hz can be derived using the relationship

$$\frac{Q_{120\ \text{Hz}}}{Q_{1\ \text{kHz}}} = \frac{1.2}{1}$$

File Courtesy of GRWiki.org

3.18 ACCURACY CHARTS.

Figure 3-10 to 3-13 are accuracy charts for capacitance, inductance, dissipation factor and resistance measurements. The charts allow the user to determine on what range the best resolution can be obtained for a particular measurement or to determine what the measurement error will be. For example, in Figure 3-9 maximum resolution for a 1-μF capacitance is on range 5, where the error is less than 0.1%, or 10 counts or less resolution. Also, on range 4 for 1μF, the error is 0.1%, or 10 counts resolution. On range 3 the error is approximately 1% (100 counts resolution), and on range 2 approximately 10% error, or 1000 counts resolution.

Each graph also shows range limits (see Table 3-1) in addition to the measurement accuracy of an unknown measured on various ranges.

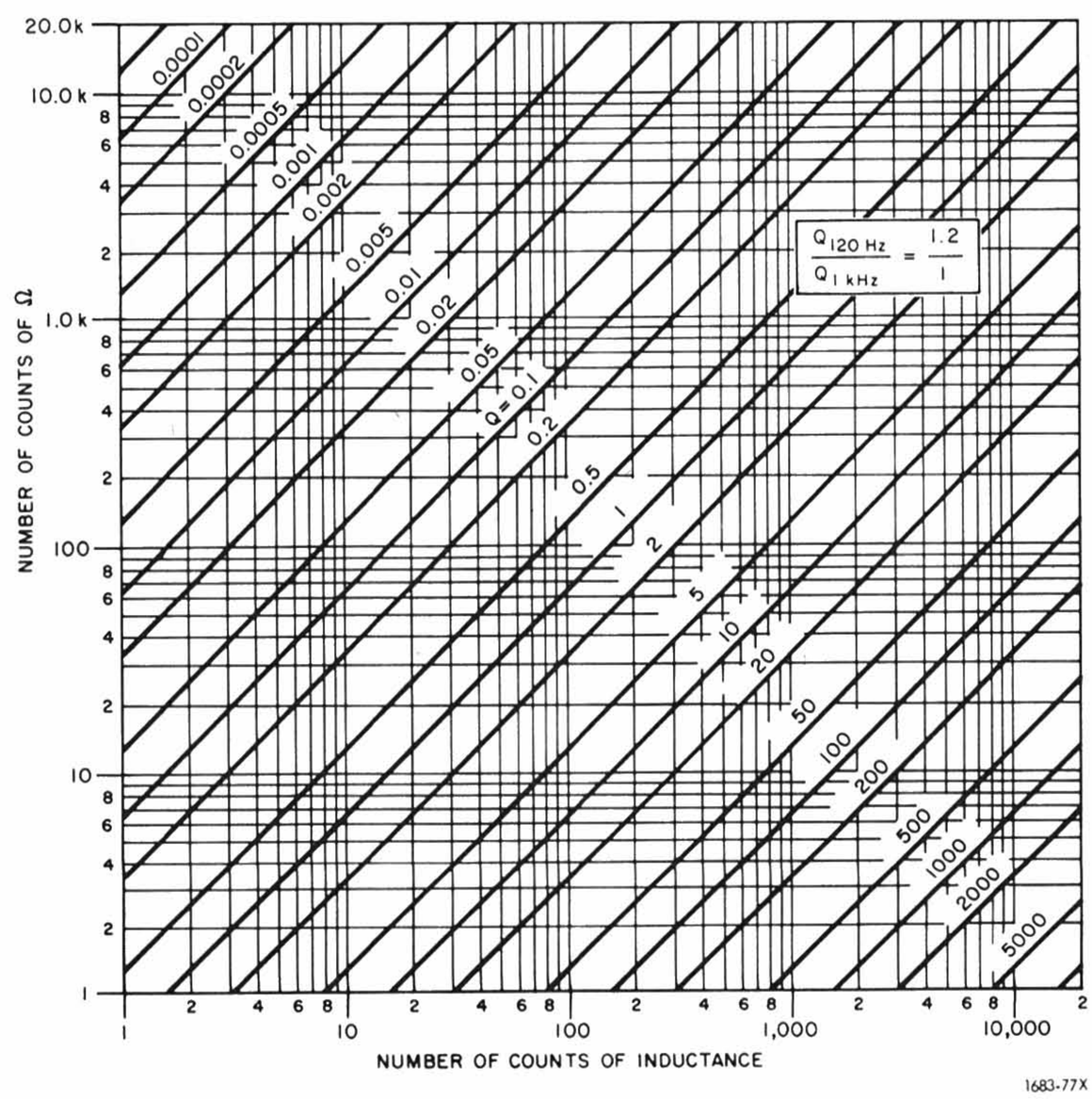

Figure 3-9. Q-factor chart.

File Courtesy of GRWiki.org

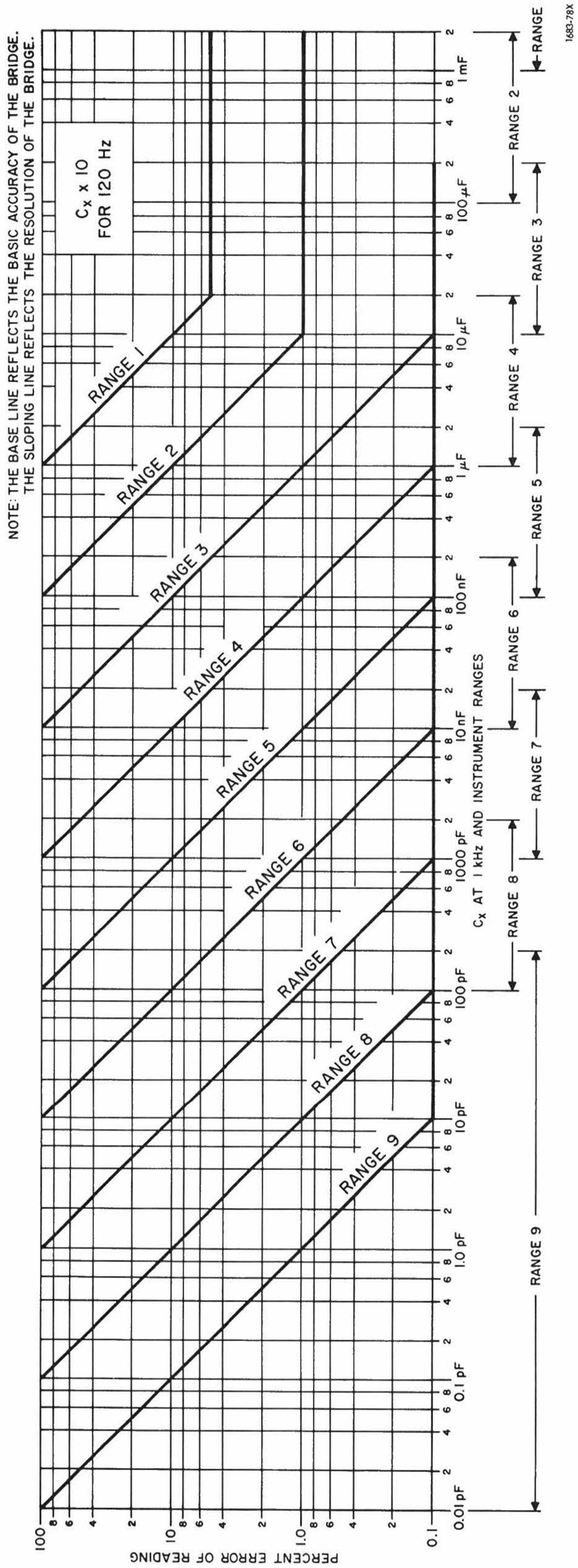

Figure 3-10. Capacitance accuracy chart.

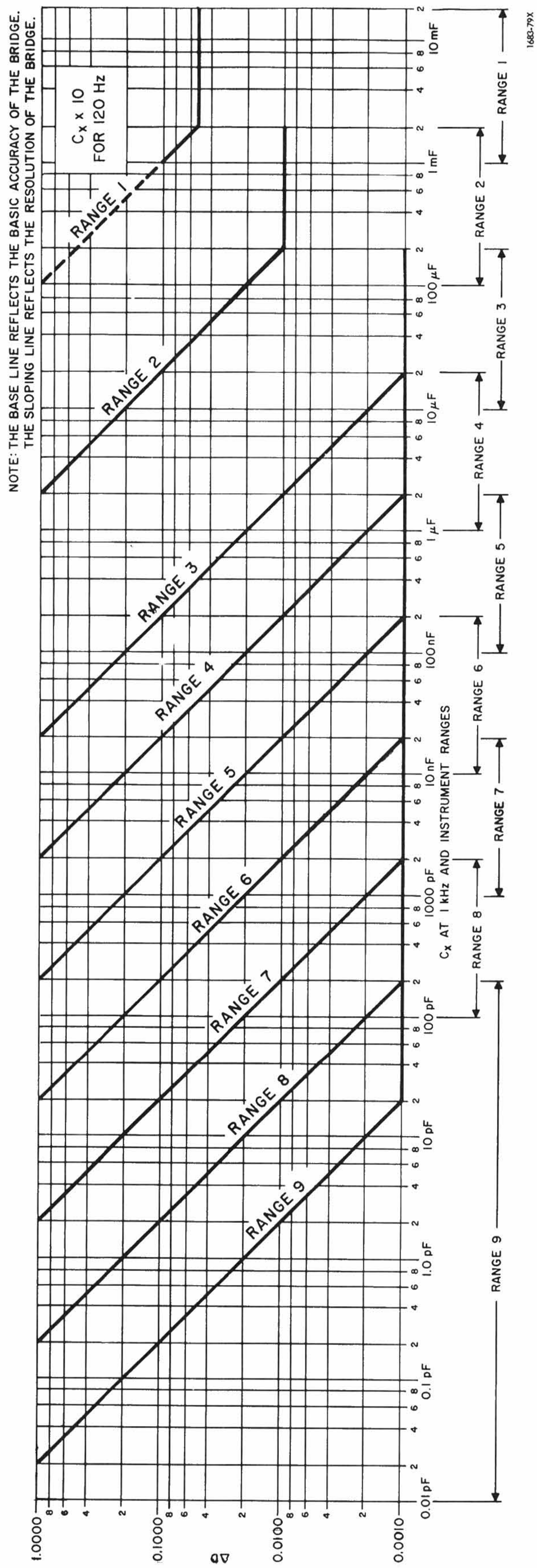

Figure 3-11. Dissipation-factor accuracy chart.

3-12 OPERATION

File Courtesy of GRWiki.org

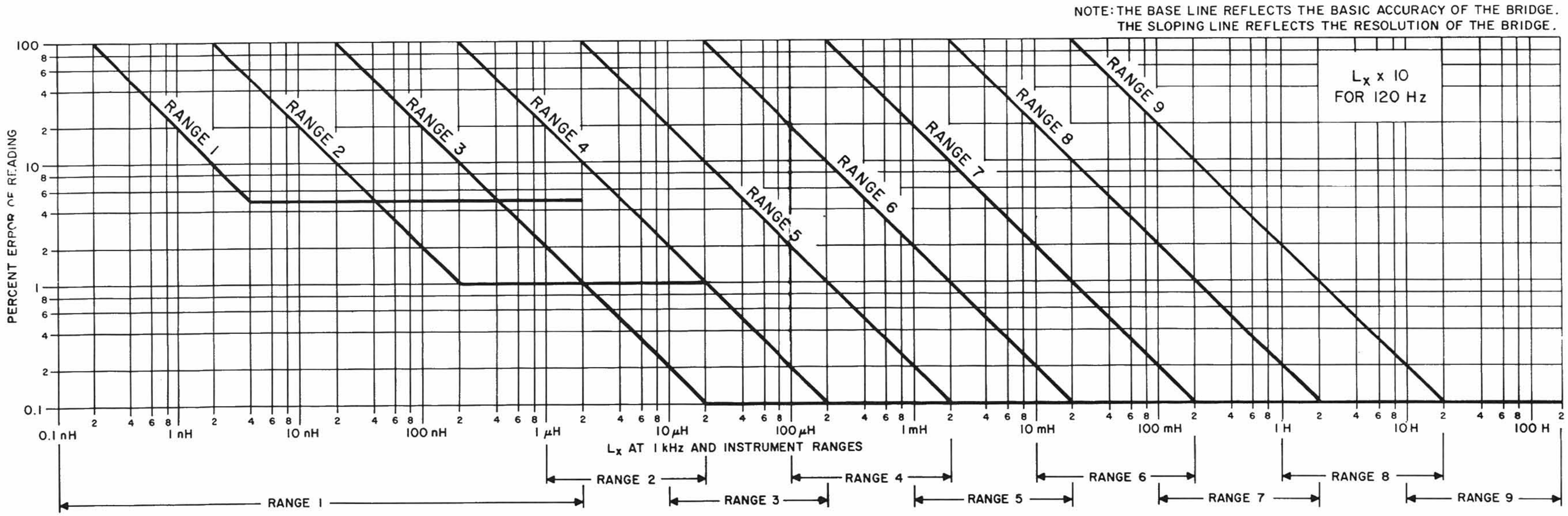

Figure 3-12. Inductance accuracy chart.

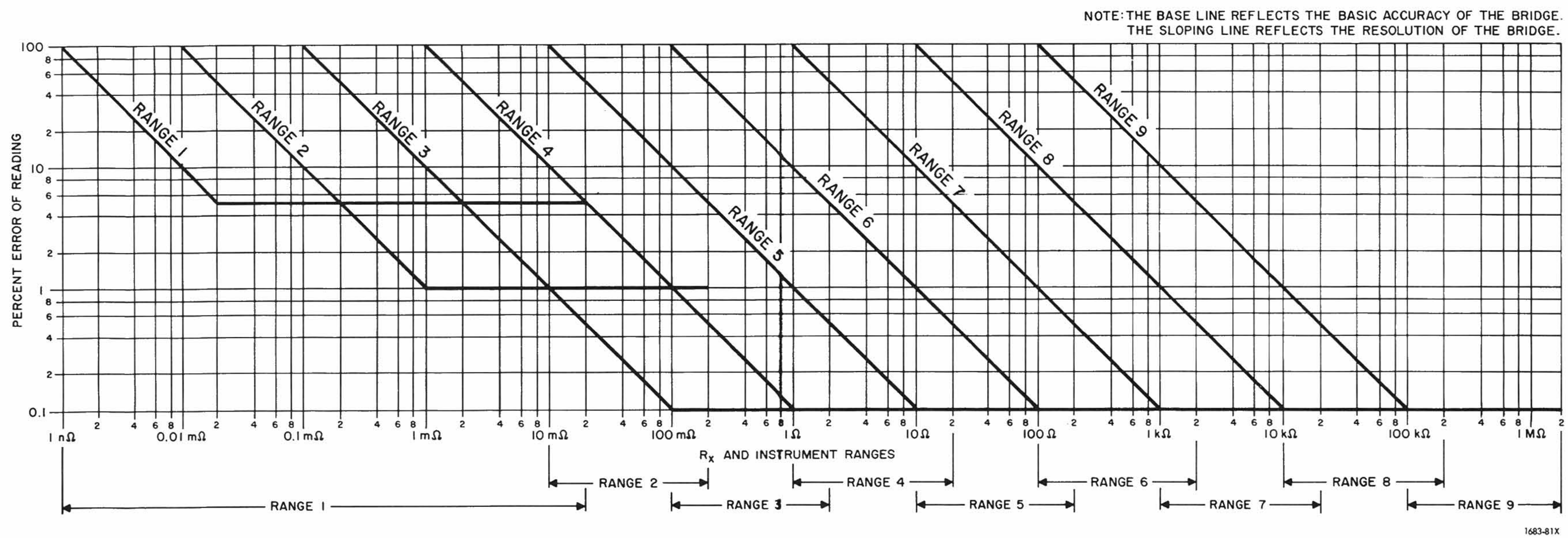

Figure 3-13. Resistance accuracy chart.

File Courtesy of GRWiki.org

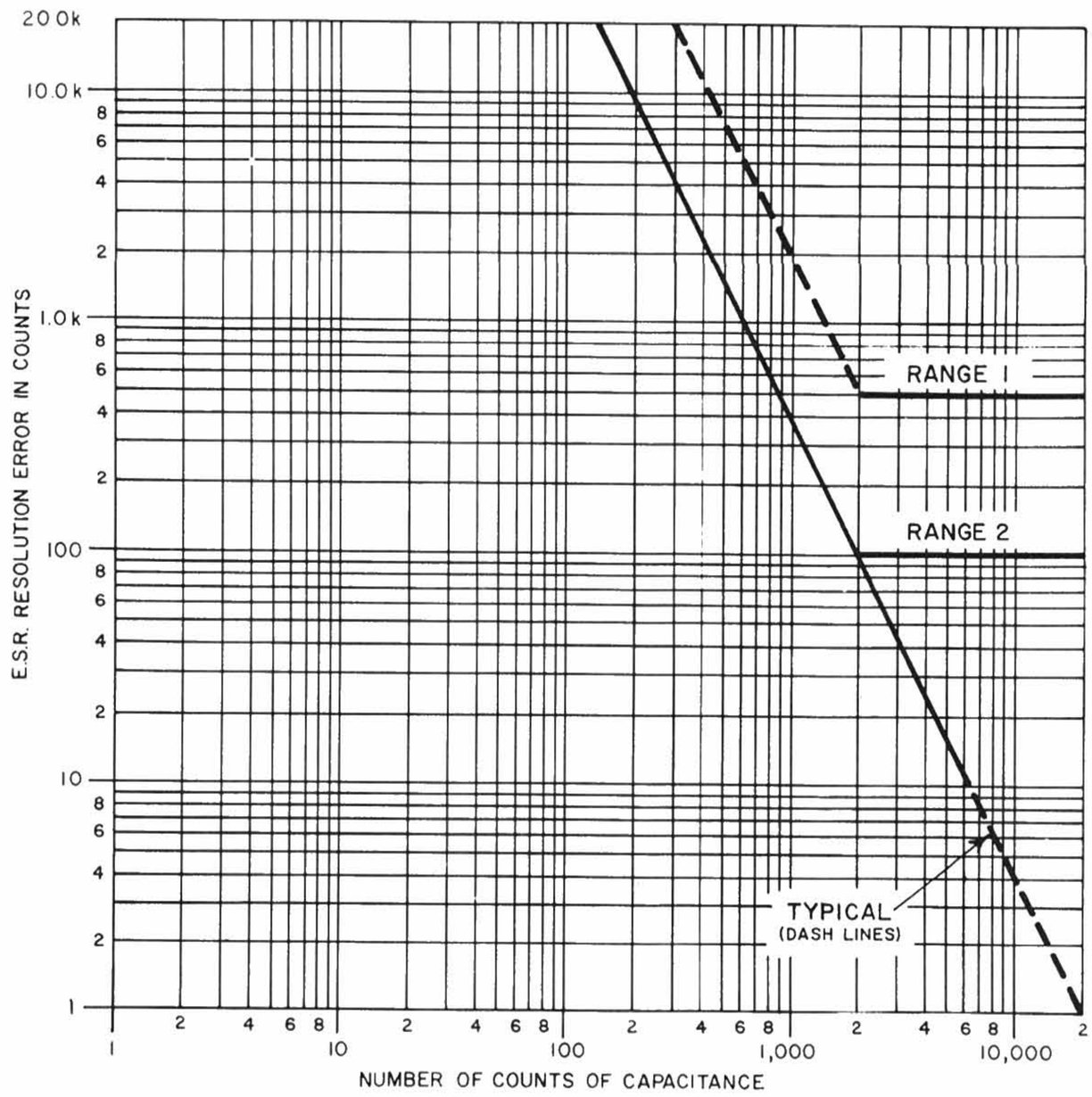

Figure 3-14. ESR resolution chart.

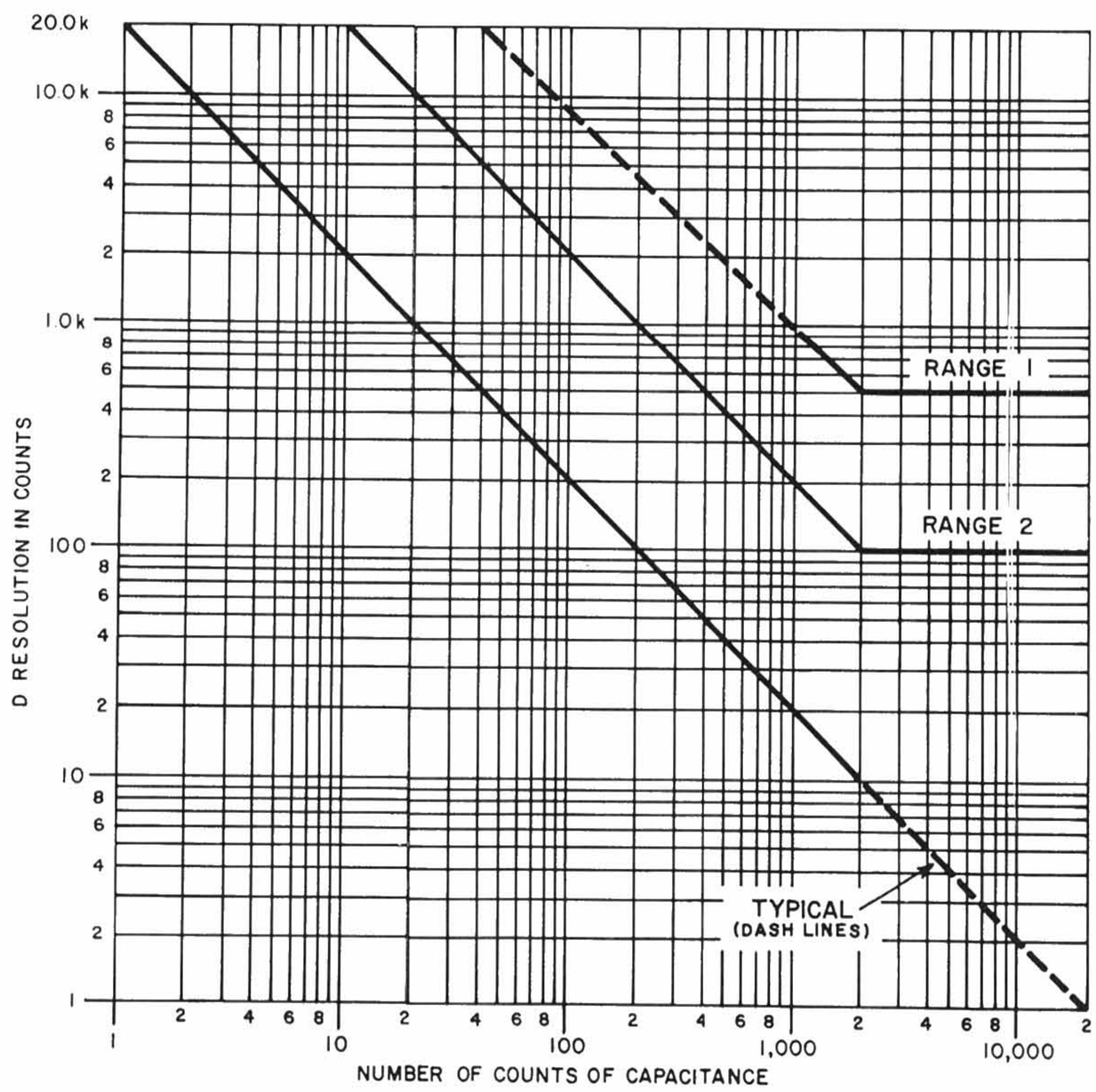

Figure 3-15. Dissipation factor (loss) resolution chart.

3-14 OPERATION

File Courtesy of GRWiki.org

3.19 MEASURING EXTERNAL LEAKAGE CURRENT.

Leakage current can also be measured on the bridge independent from other bridge functions, with the bridge providing a signal to an external device for indicating on a go, no-go basis acceptable leakage-current conditions in a similar manner as it is done in the normal bridge leakage-current measurement. This can be done by connecting the leakage-current source to the leakage board (L board) connector available at the rear panel, using a GR type 274-NQ, –NQM, or NQS double-plug patch cord.

To measure current in this manner, ground pin 35 (LEAKOFF) and the pin for the appropriate leakage-current range (LEAK 2-LEAK 5 , Figure 2-3 and Table 3-2) on the rear-panel AUXILIARY socket and set the LEAKAGE control to REMOTE. (With pin 35 grounded, the function control can be set to any position.)

Apply a reference voltage from 1 V to 25 V to AUXILIARY-socket pin 50 (LEAKAGE). This voltage establishes the acceptance limit, or level. The applied voltage is comparable to the LEAKAGE current continuously adjustable control (0.1 – 2.5) setting by the ratio of the applied voltage divided by 10. For example, on any range (Table 3-2) 1 V applied would represent the lower limit of the range (or a 0.1 setting of the continuously adjustable control) and 25 V the upper limit of the range (the 2.5 setting of the adjustable control).

After the desired time allowed for a leakage-current measurement, apply a momentary "0" to pin 47 (REMSET) of the AUXILIARY socket. If there is a go condition at this time, pin 46 (REMGO) of the AUXILIARY socket will go to "0" as soon as the REMSET "0" is removed from pin 47. If there is a no-go condition, no change will occur at pin 46; it will remain a "1".

Fiugre 6-15 illustrates a typical timing sequence, with a go condition present from a preceeding measurement.

The rapid development trend towards very high-valued capacitors with higher working voltages and also with lower leakage currents makes some 1683 Leakage Option measurements difficult, especially when controlled from the front panel, with the measurement rate set somewhat arbitrarily. Nevertheless, there are better ways to operate the Leakage option for these cases. First, however, some theoretical limitations must be taken into account.

1. *Hum.* Any A C signal on the power supply is amplified by the feedback capacitor (C_F = C3 through C7 on the Leakage Board) and the device under test (C_X) by the ratio C_X/C_F.

A 1000-μF capacitor with a loss less than 1 μA of leakage will amplify any power supply ripple by 1000/0.1 = 10,000.

2. *Charging Time.* There are two R-C time constants of interest. One is the product of the feedback capacitor and resistor. This is 10^{-2}s and is dictated by internal timing constrants. The more important one is the product of the feedback resistor and the unknown capacitor. The capacitor in the hum situation above yields a time constant of 100 s.

Considerable thought is therefore required to make full use of this option. A low-ripple power supply is required; this supply must pass high signal currents if the capacitor's value is also to be measured. These requirements may be separate, however, if leakage and capacitance measurements are separate. It is also necessary to estimate how much time is required to charge the capacitor under test. The internal timer may not be long enough.

Leakage testing should, in most instances, be separated from capacitance testing. Provision is made for this, which allows the use of a low-ripple power supply that does ***not*** have to pass high signal currents. It also allows a more controlled test time.

If hum is still a problem, there are at least two solutions:

1. Increase the value of the feedback capacitor. This must be a low-leakage type. Wet-slug tantalums Type 4450-63XX should produce the desired effect.

2. Connect an integrating A/D converter to signal LEAK-OUT (rear-panel connector). This solution will also work well.

When using internal or external Bias the MEASUREMENT RATE control determines the ***maximum*** time that the bias voltage is applied to the capacitor under test. The sequence of operation normally is: perform the leakage measurement in the time established by the RATE control, remove the bias voltage, and then make a capacitance measurement. If leakage current is acceptable before the maximum time, then remove the bias voltage, perform a capacitance test and wait for the external START signal (if applicable).

WARNING

Be careful when using the external bias. The voltage is present at the front and rear-panel connectors and at the terminals of the test fixture when an external bias is used and the rear-panel BIAS control is set to EXT. Be careful when handling charged capacitors. Do not leave the instrument unattended with a danerous external bias. Provide an adequate warning if it is necessary to do this.

File Courtesy of GRWiki.org

File Courtesy of GRWiki.org

Theory–Section 4

4.1 GENERAL 4-1
4.2 SIMPLIFIED BLOCK DESCRIPTION 4-3
4.3 BLOCK DIAGRAM DESCRIPTION 4-5
4.4 CIRCUIT DESCRIPTIONS 4-9

4.1 GENERAL.

For simplicity in referencing circuits, the 20 circuit boards and three modules that comprise the instrument are designated by letters. Table 4-1 lists the circuits and their designation. These designation letters are also used to identify schematics and drawings. The first letter of each signal name shown on schematics and diagrams designates the circuit from which the signal originated. The U, F, and G modules contain front-panel indicator lamps and are mounted on the display board (H board).

The bridge measures capacitors, inductors, and resistors. For capacitance measurements, the bridge will give a direct reading of capacitance and at the same time a direct reading of loss expressed as dissipation factor (CsD). As an option, a direct reading of loss expressed as equivalent series resistance (ESR) can be obtained simultaneously by the addition of a "C"-divider board (CsRs).

The bridge also measures inductance and resistance with loss expressed as a series element (LsRs).

The three bridge configurations, (CsD, CsRs and LsRs), which include the Y bridge and K, B, and C (if ESR is included) dividers for these different measurements, are obtained by interconnecting the standards and dividers with the front-panel function switch. The precision dividers then permit a direct reading of the unknown impedance. The addition of a leakage board (L) allows leakage current measurements to be made with capacitance measurements on a "go, no-go" basis, indicated by front-panel indicators.

The instrument, therefore, consists of two major sections, a bridge section and a control section.

The bridge section consists of:

1. Oscillator
2. Power amplifier
3. Y bridge
4. K, B, and C (if installed) dividers
5. Standards mounted on mother (M) board
6. Detector circuit.

The control section consists of:

1. Reference circuit
2. Program circuit
3. Range circuit
4. 11 and 21 (reactance and resistance) counters
5. Control circuit (front-panel).

The instrument also has a data-input circuit for receiving and passing programmed control signals to and from external sources, a data-output circuit for transmitting data to external equipment for recording, a power supply that provides bias voltages and voltages for other functions, and a leakage circuit (optional) for measuring the leakage current of electrolytic-type capacitors.

The control section incorporates several features to produce an extremely fast balance at both 120 Hz and 1 kHz. Among these are:

1. Reversible counters (the 11 and 21 counters) that can count forward as well as reverse.

2. A voltage-controlled oscillator in the reference circuit that causes the counters to count and, therefore, the dividers to switch, at a rate determined by the magnitude of the error (fast for a large error, slower for a small error).

File Courtesy of GRWiki.org

Table 4-1
1683 CIRCUITS

Desig.	Name	Remarks	Paragraph No. Detailed Description
B	B-divider board		4.4.5
C	C-divider board (optional)		4.4.5
D	Detector board		4.4.8
E	Range board		4.4.11
F	Display module	On H board	4.4.15
G	Display module	On H board	4.4.15
H	Display board		4.4.15
1I (I)	Counter board (reactance)		4.4.12
2I (R)	Counter board (resistance)		4.4.12
J	Power amplifier		4.4.3
K	K-divider board		4.4.5
L	Leakage board (optional)		4.4.6
M	Mother board	Serves mainly to connect other boards	4.4.7
N	Data-output board	For recording data	4.4.14
P	Program board		4.4.10
Q	Auxiliary (Data-input) board	For programming the bridge	4.4.13
R.	Auxiliary comparator board	On bottom of mother Board	4.4.9
S	Reference board		4.4.9
T	Oscillator board		4.4.2
U	Display module	On H board	4.4.15
V	Power supply		4.4.16
Y	Y-bridge board		4.4.4
Z	Control board	Front panel	4.4.17

File Courtesy of GRWiki.org

3. An anticipator, located on the detector board (D board), which is sort of a floating null that takes into account the error-signal time delay as it propogates through the circuitry, causing the bridge to converge more rapidly than by conventional methods.

General operation is as follows: The unknown is connected and produces an error signal that is amplified and filtered in the detector preamplifier (D board). This error signal is compared to a predicting voltage level (D board) and phase sampled (P board) for direction information, i.e., whether the divider is reading high or low. This will tell the servo (see Figure 4-1) the direction the counters should operate. The error signal is also converted to dc and produces a clock signal (S board), whose frequency is related to the magnitude of the error signal.

The counters are then operating and adjusting the precision dividers in such a way as to minimize the error signal. They will continue to count until either a balance is reached or there is overshoot, at which point the counters will reverse direction and count until balance is finally reached. The anticipator will minimize overshoot and produce the fastest convergence. This system will produce a balance in about 100 periods of the bridge signal frequency for a full-scale (10000 counts) error.

The four-terminal connection to the unknown to be measured enables low impedances to be accurately measured by minimizing the effects of lead impedances. High impedances can also be measured very accurately because stray capacitance is either connected across the oscillator or the low impedance divider (Y divider) and, therefore, is guarded by the low impedance to ground.

4.2 SIMPLIFIED BLOCK DESCRIPTION.

4.2.1 General.

Figure 4-1 shows a simplified block diagram of the 1683. As shown, the system represents a servomechanism in which the error signal is minimized by adjusting the gain of the precision dividers.

The 1683 measures the in-phase voltage across the unknown to obtain a value for its real or resistive component and measures the 90° out-of-phase (quadrature) voltage to obtain a value for its imaginary or reactive component. Since the 1683 is a true bridge, it does not measure these voltages directly but instead creates equal but opposite voltages (correction voltages) that are controlled in such a manner to cancel the unbalance, or error, voltages caused by the unknown. It then presents these voltages (the correction voltage), calibrated in terms of resistance or dissipation factor and capacitance or inductance, to front-panel numerical readout indicators.

4.2.2 Measurement and Bridge Network.

A 120-Hz or 1-kHz measurement voltage, E_T, is applied across a series network comprised of the unknown, R_x and X_x, and a standard resistor, R_s, which results in a current, I_T. A voltage drop, E_{XR}, is produced across R_x, and it is in phase (real) with I_T and a voltage drop, E_{XI}, across X_x that is 90° out of phase (imaginary) with I_T. These two voltages, applied to an isolation amplifier, Y, emerge as voltages E_{YR} and E_{YI}, and are then applied to a standard conductance, G_T. The resultant currents through G_T are the real and imaginary unbalance currents, I_{YR} and I_{YI}, due to the unknown.

The current I_{SR}, through R_s is equal to I_T and in phase with the voltage across R_s. The current, I_{SR}, is converted to a proportional voltage, E_{-YR}, which is inverted with respect to I_{SR}. This voltage is applied to two variable-gain amplifiers (B and K dividers). These amplifiers are adjusted by the output of the 1I and 2I counters, which indicate the amount of correction required to reduce an error signal to zero. The output of B is applied to standard conductance G_B, and the K output is applied to standard capacitor C_S. The resultant currents through G_B and C_S are the real and imaginary currents, I_{BR} and I_{KI}, which are inverted with respect to their unbalance-current counterpart.

The unbalance current and the correction currents are summed algebraically and the difference is applied as the error signal to the phase detector (D). The phase detector samples the error signal every 90°. The resultant sampled signal is fed to the reference board (S), which produces a clock signal with a rate related to the magnitude of the error, and to the detector board, which produces the signals that command the counters to count forward or reverse, according to the phase of the sampled signal. For this discussion, the instrument will be considered to consist of two servomechanism loops, the B and the A loops, with the B loops consisting of samples taken at 90° and the A loop at 180°.

4.2.3 Control Section.

B Servo Loop. Assume at the start of a measurement that the gain of the variable-gain-amplifiers is zero, so that both correction currents, I_{BR} and I_{KI} are zero. At the first 90° sample only the real unbalance current, I_{YR}, is seen. (Imaginary unbalance current I_{YI} is zero at 90°.) Assume this current is six units and, as shown, is negative. The 90° sample E_{DR} is applied to a direction-control circuit (P board) that produces a gain-control signal E_{PR}, for the B amplifier. When E_{DR} is negative, E_{PR} is a logic level that directs the 2I counter and, hence, the B amplifier to count forward (F). By the second sample, the B amplifier has increased its gain so that I_{BR} is +2 units and the resultant error, E_{DR}, is $I_{YR} + I_{BR} = -6 + 2 = -4$. The counter then reads 200 units. Since E_{DR} is still negative, E_{PR} is still "F", and the counter and amplifier B continue to count forward.

For the third sample $I_{YR} + I_{BR} = -6 + 4 = -2$. E_{DR} is still negative, E_{PR} forward (F), and amplifier B continues to count forward.

File Courtesy of GRWiki.org

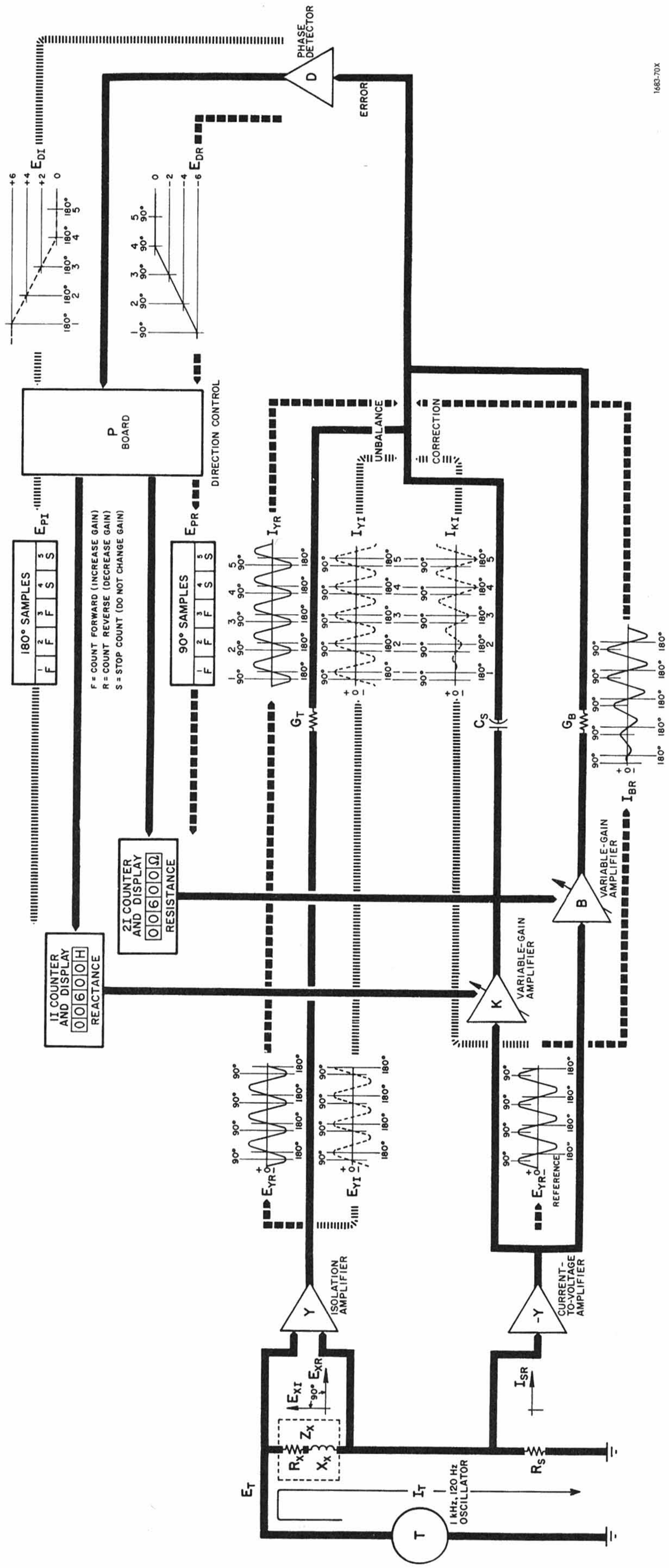

Figure 4-1. 1683 simplified block diagram.

4-4 THEORY

File Courtesy of GRWiki.org

At the fourth sample $I_{YR} + I_{BR} = -6 + 6 = 0$. E_{DR} is now zero, which causes E_{PR} to change from F to stop (S) and holds the gain of amplifier B constant; the real components are balanced. The 2I display has kept track of the gain of the B amplifier and now registers the gain, expressed in terms of resistance, as a measure of the resistive component of the unknown.

A Servo Loop. The A servo loop operates in the same manner as the B, except the samples are taken at 180°, and the significance of the error-signal polarity is the opposite. At the first sample, $I_{YI} + I_{KI} = +6 +0 = +6$. E_{DI} is positive (opposite to that of E_{DR} of the 90° sample in the B servo loop), which causes I_{PI} to be F and direct amplifier K to count forward.

For sample two, $I_{YI} + I_{KI} = +6 -2 = +4$. E_{DI} is still positive, E_{PI} is still F, and amplifier K continues to count forward.

At sample four, $I_{YI} + I_{KI} = +6 -6 = 0$. E_{DI} is now zero, causing E_{PI} to change from F to S, holding the amplifier gain constant; the imaginary components are balanced.

The 1I counter and display has kept track of the gain of amplifier K, registering the gain, expressed in terms of inductance, or capacitance, as a measure of the reactive component for the unknown.

In both loops, if the gain increase overshot the error signal, a E_{PI} or E_{PR} reverse (R) logic signal would be produced, causing the counters to reverse and the amplifier gain to decrease.

4.3 BLOCK DIAGRAM DESCRIPTION.

4.3.1 General.

Figure 6-3 shows a detailed block diagram of the 1683. Also refer to Figure 6-4.

4.3.2 Oscillator.

The oscillator is a Wien-Bridge oscillator that operates at two frequencies, 120 Hz and 1 kHz, selected with the front-panel function switch. The oscillator has two parts, a frequency-determining network and a voltage divider. The voltage-divider network supplies negative feedback to stabilize signal amplitude. The front-panel OSC LEVEL control can vary the oscillator output from 0.2 to 2.2 V, open circuit.

The oscillator signal is gated off for 5 ms during a change of range, gated off during a leakage-current measurement (if made), and gated off when a programmed QOSCOFF signal from an external source is applied to the AUXILIARY socket. The oscillator output is applied to the power amplifier.

4.3.3 Power Amplifier.

The power amplifier increases the bridge-oscillator signal and furnishes an internal dc bias to the part under test, so that the part can be measured under bias and/or its leakage current can be measured. The ac gain of the amplifier is −2.2 and it can supply 2A of current with less than 0.5% distortion. The output impedance is 1 Ω. The bias voltage can be adjusted from 0 V to approximately 3 V with the front-panel BIAS control.

The bias voltage is disabled when the bridge is balanced, when disabled by an externally applied QBIAS signal at the AUXILIARY socket, or when inductance is being measured. The amplifier output is fed to the high-current (HC) terminal.

4.3.4 Terminals.

Four terminals preserve the accuracy of the bridge, even with low-impedance unknowns measured remotely. A fifth terminal (GUARD), or ground, provides a similar safeguard with high impedances whose measurement might otherwise be affected by stray capacitance. Since it is a Kelvin-type connection, the high terminals must be connected together and the low terminals connected together for a measurement.

4.3.5 Y Bridge.

The Y bridge performs three functions: (1) amplifies the voltage across the unknown, (2) converts the current through the unknown to a voltage proportional to the current, and (3) changes the range of the bridge by regulating the current that is converted to a voltage proportional to the current. The voltages produced drive the various standards. The circuit consists of an isolation amplifier and differential amplifier, which act as a voltage-to-voltage amplifier; a current divider (range divider); and R_A amplifier that acts as a current-to-voltage amplifier, converting the current through the unknown to a voltage.

The isolation amplifier produces a high input impedance for the voltage probe (terminal) and has a capacitive -coupled input, so that a polarizing voltage will not affect the circuit bias voltage. The differential amplifier measures the voltage across the unknown, minimizing errors due to lead impedances. The output voltage is proportional to the voltage across the unknown.

The current divider is a resistive divider that, under control of the range selector (either front-panel control, external control or range counter in the range circuit, E board), changes the range of the bridge; it has a range from 1 to 10^9. The R_A amplifier converts the current to a porportional voltage to drive the standards.

4.3.6 Dividers.

The dividers consist of a resistive ladder network (weighted conductances) connected to an output operational amplifier. The K, B, and C (optional) dividers and the standards can be switched by the front-panel mode switch to form three elementary bridge configurations (Figure

File Courtesy of GRWiki.org

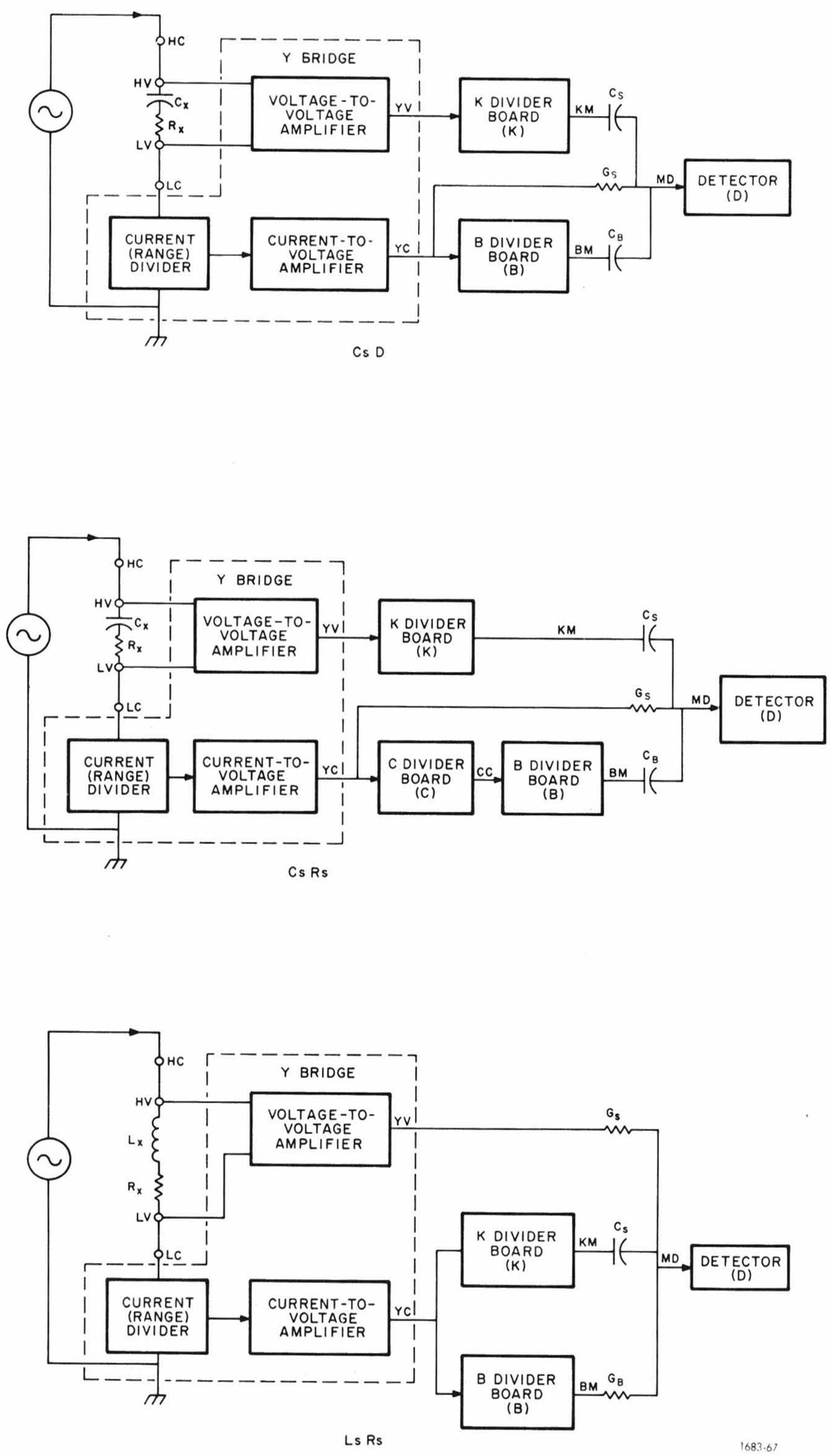

Figure 4-2. Bridge configurations.

4-6 THEORY

File Courtesy of GRWiki.org

4-2) for measuring three functions (CsD, LsRs and Cs with ESR). The optional C divider is for measuring ESR.

The standards used in these bridge configurations are selected so that the values of the dividers give a direct reading of the unknown impedance. The outputs of the reversible counters switch in or out the resistive dividers (weighted conductances) in the ladder network, reducing the error signals to zero and thereby producing a balance. The counters store the amount of attenuation or non-attenuation required to do this and drive the displays that give a readout of the value of the part under test. The three boards are similar, except switch drivers for switching in weighted conductances on the C board are on the K board, and the B board has two configurations of the output operational amplifier, one for dissipation factor measurements and one for ESR measurements (if made). This is because there is a 180° phase shift for ESR measurements and no phase shift for dissipation-factor measurements.

Input relays, under control of the function selector (front-panel function switch or external control), switch in the applicable path for the function being measured. Applicable components for different frequency measurements are also switched in or out by the function selector.

The bridge configurations are controlled by externally applied program signals through the AUXILIARY socket or by the front-panel function switch.

Signal KV, the input signal to the K divider, is also fed to the reference circuit, where it is used as the bridge reference signal for obtaining 0°, 90°, 180°, and 270°, phase signals that are phase-referenced to the error signal. The resultant signals drive the phase detectors (P board).

4.3.7 Leakage-Current Circuit.

This circuit is available as an option. If included, the circuit is activated before a balance operation, if leakage current is being measured, and measures the leakage current on a "go, no-go" basis. The circuit converts the leakage current to a proportional voltage and compares the voltage to a reference voltage selected either by the front-panel LEAKAGE switch or supplied from an external source through the AUXILIARY connector. If the leakage current does not exceed the selected limit within the time (0-10 s) established by the front-panel VARIABLE MEAS. RATE control, indicating the leakage is equal to or less than the limit, the NO GO indicator will extinguish and the GO indicator will light. The NO GO indicator will remain on if the leakage is more than the established limit for the time selected.

4.3.8 Mother Board.

This circuit board contains the standards. The applicable standards are selected by the function selector. The board serves primarily as an intraconnecting assembly.

4.3.9 Detector Circuit.

This circuit consists of four major sections:

1. Preamplifier
2. Anticipator
3. Comparator
4. Peak detector.

The preamplifier section converts the error current to a voltage, amplifies the voltage, filters the signal, and applies the signal to a comparator. The error signal is applied to a peak detector that produces an output level proportional to the error voltage. The resultant level, DEEE, is fed to the S board where it is used to indicate if an error is less than 500 counts or 100 counts and thereby control accordingly (slow down) the rate of the reference clock, SVCO.

The filter output is added to the anticipator function. This signal is amplified and squared; that is, logic levels are produced when the added signal is greater or less than 0 V. This signal (DO) is fed to the P board where it is phase sampled by the flip-flops that produce count-forward or count-reverse signals. Signal DE, the filter output, is also fed to the reference circuit to produce signals that indicate if the bridge's error count is greater than 8 counts and when the error is one count or less.

The anticipator is a floating null that works to minimize time delays and it is driven by the anticipator driver on the P board. The driver is in turn driven by the direction control flip-flops and a START signal, either the one produced by the front-panel START pushbutton switch, an external source, or that produced automatically on the P board at the start of an automatic operation. The anticipator causes the bridge to balance more rapidly than conventional methods allow. This is done by producing a signal that compensates for the signal delay encountered by the error signal passing through the preamplifier and filter. The signal produced by the anticipator simulates the point at which a zero crossing of the error signal would occur had there been no signal delay produced by the preamplifier.

Signals PAB and PAR cause the signal function to rise at the beginning of a balance, decrease as the error decreases, and "hold" while the counting occurs. A reset condition will cause the anticipator function to delay before the start of a measurement. The signal will then rise after the start pulse occurs. The anticipator signal then is fed to the comparator for comparison with the error signal. Squared outputs (signal DO) are produced at the phase-reference points for certain conditions described in paragraph 4.4.10. Signal DO determines whether the direction-control flip-flops should produce forward-, reverse-, or stop-count signals. A stop-count signal will be produced when the anticipator function exceeds the output of the filter.

4.3.10 Reference Circuit.

This circuit has the following functions:

1. Provides 0°, 90°, 180°, and 270°, phase-reference signals to the direction control flip-flop circuit on the P

File Courtesy of GRWiki.org

board for determining which way the counters should count (forward, reverse, or stop).

2. Provides a signal (SUNBAL), via the control board (Z) to the front-panel UNBALANCE indicator, that will light the UNBALANCED indicator while the bridge is in the unbalanced state. (The indicator lights when the error is greater than eight counts.)

3. Determines from a bridge reference signal, KV, taken from the input to the K divider, the magnitude of the reference signal. The error signal is compared to this reference to determine the number of counts of error.

4. Provides a bridge clock (SVCO) that drives the counters (and hence the dividers) at a rate determined by the magnitude of the bridge error (faster for a larger error). There are four clock rates.

Signal DEEE from the detector circuit is fed to a detector that produces the error-less-than-500-counts and error-less-than-100 counts signal. These signals cause the first two changes of the clock rate. Signal DE is used to indicate if an error is less than 8 counts (SUNBAL) and if it is one count or less (SBAL).

Signal SBAL is fed to the range circuit to produce a signal (EBAL) that verifies a balance has occured. This signal is in turn fed to the program circuit to produce a new start pulse for another balance operation (if in the variable measurement rate or remote-automatic modes). This also inhibits the main gates and, therefore, signals EICLK and ERCLK on the range board until the new balance operation begins.

The error sensitivity of the instrument is established by the front-panel SENSITIVITY control, which adjusts the trigger level of the balance comparator.

4.3.11 Program Circuit.

This circuit contains a clock-pulse circuit that produces signal PCLK23 from the bridge clock signal SVCO. PCLK23 is gated through the range circuit main gates to drive the counters and dividers at a rate determined by SVCO. The circuit also has a test generator called the variable measurement rate (VMR) generator. In the variable measurement rate or remote modes of operation, this generator produces "start balance" pulses at a rate determined by the setting of the VARIABLE MEAS. RATE control. The start pulse is produced after a balance is achieved, or after a leakage measurement is made (if desired), to start another balance operation.

In any test mode of operation the generator signal replaces signal SVCO and drives the counters and dividers. In the track mode the generator runs continually, but is not used. The main gates in the range circuit are held open though, so that the clock will drive the counters and dividers continually, even if a balance is achieved. This is useful for stability or drift measurements of a component.

The circuit contains a start-stop circuit. This circuit is comprised of a number of subcircuits:

1. Balance flip-flop and "no-balance" delay
2. Anti-bounce switch
3. Start Circuit.

These circuits produce a start pulse from either the PVMR generator under the conditions described above, the front-panel START pushbutton switch, an externally applied start signal, or a closure to ground introduced externally at the EXT START connector. The circuit also produces signal PRIG that holds the main-gate circuits on the range board open, during the test and track modes of operation or during an unbalanced condition, allowing the clock to drive the counters. This circuit also produces start-leakage-measurement signals ($P\overline{STL}$, $P\overline{LEAK}$, and $P\overline{LEAKOFF}$) that start a leakage measurement during the leakage mode of operation.

The program board also contains the direction-control circuit. This circuit consists of a number of phase-detector flip-flops that store direction information. The reference signals from the reference board and the bridge error signal, DO, are applied together to the flip-flops, which are clock-type flip-flops. The flip-flops change state according to the relationship of error signal DO to the phase reference signals. The signals produced are forward, reverse, and stop the 1I and/or 2I (R) clocks. The logic levels of signals PIR and PRR determine these conditions. These signals are also fed to an anticipator-generator driver in the circuit that produces signals PAR and PAB that command the anticipator generator in the detector circuit to produce a rising signal for the start of a balance, a decaying signal for a decreasing error, and a "hold" signal while the counters count and adjust the dividers. Lamps are provided on the board to check the operation of the direction-control flip-flops.

4.3.12 Range Circuit.

This circuit has a reversible range counter and a decoder that establishes the range of the 1683 in the automatic or automatic-remote modes of operation by switching in or out the applicable resistance in the current-divider network at the input of the Y-bridge circuit. This counter also drives the decimal-point indicators and unit symbols on the front-panel display (H). This data can also be sent, via the data-out board, to peripheral equipment for recording or other operations.

The circuit also has a range-control circuit that receives inputs from the counters and other functions that indicate that the instrument should change range (automatic mode), and, if so, cause the range counter to range up or down according to the direction determined. If a change of range is required, a signal, $E\overline{CHANGE}$, is produced by a range-delay circuit to inhibit the main gates and to prevent the program circuit from producing a "balanced" condition, in case a balance condition is present during a change of range. The range-delay circuit also produces a signal that allows the range counter to change the range if a change is

File Courtesy of GRWiki.org

required. This signal is delayed by the circuit to allow circuits to "settle down."

The range circuit also has the main gates that gate the clock pulses to the counters. These gates pass the clock signals to the counters, except during a bridge-balanced condition, leakage-current measurement, or during a change or possible change of range.

The range counter has lamps on the board that indicate in BCD 1-2-4-8 weighting the state of the counter flip-flops. Each gate on the main gate has a lamp that lights when clock pulses are being gated to the counters. The direction-control circuit has two lamps, one that indicates the counter should be counting forward and one that indicates that it should be counting reverse.

4.3.13 Counters.

Both counters are four-stage reversible counters. The 1I (I) counter counts reactance, the 2I (R) counter resistance and dissipation factor. They provide digital outputs in 1-2-4-8 BCD that can be decoded to decimal readouts (0 through 9); drive other circuits; and produce digital levels when a certain number of pulses have been counted, to be used by the range circuit for ranging determination.

The logic level of the PIR and PRR signals determine the direction the counters should count — forward or reverse. The counters count from 00000 up to 19999 and consist of four stages and one tens-of-thousands (Spillover) flip-flop. The spillover flip-flop indicates the four decade counters have exceeded a count of 9999. The outputs of the counters are fed to the display board where they are decoded to drive the appropriate numerals of the numerical readout tubes. The outputs are also fed to the DATA-OUTPUT socket (N), to drive peripheral recording equipment.

Decoded counts of 00000 and a reverse PIR or PRR signal; 00XXX (spill flip-flop and "thousands" decade read 00); and 19999 and a forward PIR or PRR signal are fed to the range circuit, to be used to determine an up-range or down-range change in the automatic-range mode of operation. The counters can be set to zero with the front-panel SET ZERO pushbutton switch.

4.3.14 Control Board.

The front-panel control board controls the operation of the instrument. These controls are described in paragraph 1.3. Most of the program signals that are received from and transmitted to peripheral equipment are routed through the control board when the controls are set to the REMOTE position. Range information from the range counter in the range circuit is applied to a matrix on this board that in turn drives the decimal-point indicators and symbols on the front-panel display board.

4.3.15 Data-Output Board.

This board serves as an interconnection between external recording equipment and the 1683; this circuit board is an optional item. The board supplies external equipment, via its plug receptacle, the outputs of the 1I and 2I counters and the range counter in the range circuit in a BCD weighting of 1-2-4-8, plus two control signals, PABORT which indicates a failure to balance after 2.5 s and PBUSY that indicates a balance is started and in process.

The board also can receive a "start" signal from external equipment and an INHIBIT signal that can be used to inhibit a balance.

Two types of boards are available, a low-level data and a high-level data board. The low-level board is for standard TTL logic levels (logical "0" ground with a 10-mA sink capability, logical "1" ⩾3.5 V). The high-level is the same as the low-level, except all outputs are a 15-V swing (logical "0" ground with a 10-mA sink capability, logical "1" +15 V behind 12 kΩ). The IC modules on each circuit board are interchangeable, however, with provisions made for suitable biasing connections.

4.3.16 Auxiliary Board.

This board serves as an interconnecting device between external equipment and the 1683 for remote programming. Both input and output control signals are routed through the board. All control functions, except line voltage, are available for remote programming. Input gates on the board are enabled when front-panel controls are set to the REMOTE position.

4.3.17 Display Board.

This board contains drivers and decoders that decode the outputs of the counters to drive the numerical readout tubes mounted on the board. Range and function inputs from the control board drive the decimal indicators and symbol lamps. Three modules (F, U, and G) containing the symbol and nomenclature lamps are also mounted on the board.

4.3.18 Power Supply.

The power supply provides 250 V to the numerical readout tubes on the display board. It also supplies regulated voltages of +15, −15, +5, and +10 V for biasing circuits. In addition, the supply furnishes +8 and −8 V to the power amplifier and a synchronizing signal to the oscillator, to prevent any "beating" effect introduced by the line voltage.

4.4 CIRCUIT DESCRIPTIONS.

4.4.1 General.

The following paragraphs contain circuit descriptions of all the 1683 circuits in the signal flow order shown in Figure 6-3. In the following discussion, logical "1" is defined as a 3.5-V-to-5-V level and a logical "0" is approximately ground.

File Courtesy of GRWiki.org

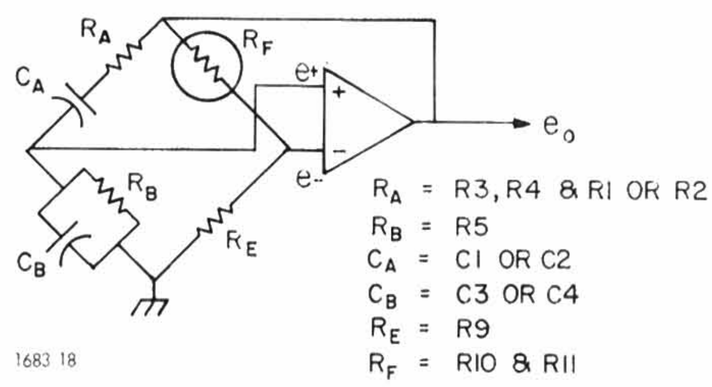

Figure 4-3. Oscillator equivalent.

4.4.2 Oscillator (Figure 6-23).

Figure 4-3 shows an equivalent circuit of the oscillator (T board). The oscillator is a Wien bridge oscillator that can be considered to consist of two parts, a frequency-determining network (C_A, C_B, R_A and R_B) that supplies positive feedback to sustain oscillation, and a voltage divider (R_F and R_E) that supplies negative feedback to stabilize the amplitude.

The oscillator has two frequencies, 120 Hz and 1 kHz, selected by the function selector (front-panel or external control). The frequencies are selected by changing the values of C_A and C_B by switching in reed switches K3 and K4 with transistors Q3 and Q4. R_F is a thermistor that adjusts itself to the value needed to maintain a constant amplitude oscillation.

The net gain of the bridge amplifier loop is (1/3) 3, or +1, and the circuit oscillates at frequency f_o.

R_A, because of $R3$, has a positive temperature coefficient that cancels the negative temperature coefficient of the capacitors, limiting frequency drift due to temperature. Distortion is less than 0.5% at both frequencies. Signal ZS3 is a "0" when the function selector is set to any 120-Hz position, and a "1" when set to any 1-kHz position. A "0" switches in C8 and C9. At 120-Hz, Q3 and Q4 are turned on and ASYNC from terminal 20 of line transformer T1 synchronizes the oscillator with the line frequency, to eliminate any beating effect.

Q5 and Q7 function as a switch to gate off the oscillator when the bridge is either changing range, as denoted by signal $\overline{\text{ECHANGE}}$ (duration of 25 ms or less), which is a "0" during a change of range; when leakage is being measured, denoted by a "1" $\overline{\text{PLEAKOFF}}$ signal from flip-flop IC28 on the P board; or when the oscillator is programmed "off" by signal QOSCOFF. A "0" at IC2(8) turns on Q7, which turns on Q5 to provide the oscillator signal to the power amplifier (J board) and then to the part under test. The timing circuit (R24, C7) reduces the 25-ms or less $\overline{\text{ECHANGE}}$ pulse to 5 ms, therefore inhibiting the oscillator during the first 5 ms of a range or possible range change. This allows the oscillator signal to propagate through the circuits after the range has been changed but before the range-change inhibit is removed. Figure 4-4 illustrates the range-change timing and oscillator timing sequence.

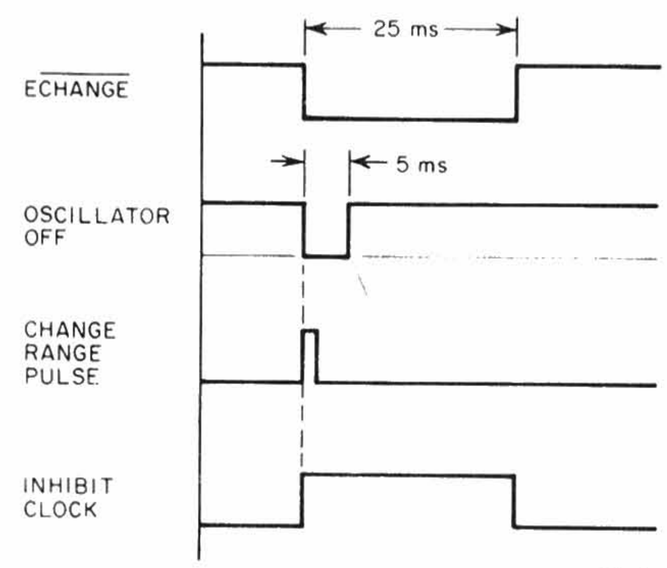

Figure 4-4. Oscillator timing.

R20 is a gain adjustment. The oscillator signal, TOSC, is fed to a potentiometer (A-R1) on the front panel where it can be varied from 0.25 to 2.2 V by the OSC LEVEL control for application to the power amplifier (J board).

4.4.3 Power Amplifier (Figure 6-13).

The power amplifier (J board) amplifies the bridge-oscillator signal and provides an internal dc bias to the part under test, so that the part can be measured under bias and/or its leakage current can be measured.

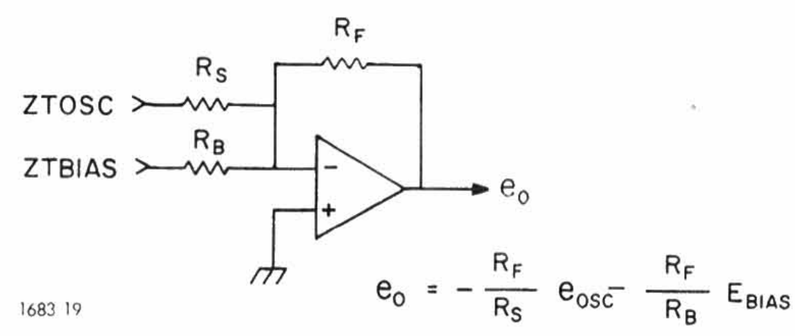

Figure 4-5. Power amplifier equivalent circuit.

Figure 4-5 shows the equivalent circuit of the amplifier.

The input to the amplifier is a 1-V, rms, 120-Hz or 1-kHz signal from the bridge oscillator (T board). The gain of the amplifier is −2.2, and it can supply two amperes of current with <0.5% distortion. The circuit is short-circuit proof.

The gain for bias is also −2.2, and a negative voltage (ZTBIAS) is supplied through a potentiometer, A-R2, on the front panel. This voltage can be adjusted from 0 V to approximately 3 V with the front-panel BIAS control. The signal can then ride on an internal bias of up to 3 V to ensure polarization of capacitors. R5 sets the amplifier output level to 0 V with no ZTBIAS. R27 is a stray capacitance adjustment and is available at the rear panel (A-R27). The output of this adjustment, JTOSC, is fed to capacitor C17 on the mother board (M board). The

File Courtesy of GRWiki.org

capacitor is connected to the low-voltage terminal (LV) of the Y bridge, via the mother board. This adjustment allows the cancellation of stray capacitance across the test terminals.

The PBUSY signal from the P circuit indicates that the bridge is in an unbalanced condition. When the bridge is unbalanced, PBUSY is a logical "1". When the bridge is balanced, PBUSY goes to "0" and disables the bias. $\overline{\text{QBIAS}}$, from an external source, will override PBUSY and enable the internal bias, when $\overline{\text{QBIAS}}$ is a logical "0".

ZS2, a logical "1", indicates an inductance measurement is being made. When this occurs, the signal disables the bias input.

External bias of up to 600 V can be applied in series with the J board JHC terminal and the part under measurement by applying a bias voltage to the BIAS connection on the rear panel.

4.4.4 Y Bridge (Figure 6-26).

General. The Y bridge performs three functions: (1) detects the voltage across the unknown, (2) converts the current through the unknown to a voltage proportional to the current, and (3) changes the range of the bridge by regulating the current that is converted to a voltage proportional to the current. The voltages produced by the Y bridge drive the various standards. Figure 4-2 shows the various configurations in which the Y bridge is used for measuring impedance.

Figure 4-6 shows a simplified block diagram of the Y bridge.

As shown, the circuit consists of an isolation amplifier and differential amplifier, which act as a voltage-to-voltage amplifier; a current divider (range divider); and R_A amplifier that acts as a current-to-voltage amplifier.

The isolation amplifier produces a high input impedance for the voltage probe and has a capacitive-coupled input, so that a polarizing voltage will not affect the circuit bias voltage. The differential amplifier is a high-gain feedback amplifier that measures the voltage across the unknown, minimizing errors due to lead impedances. Output voltage YV is proportional to voltage E_x, the potential across the part under test.

The current divider (range divider) is a resistive divider that, under control of the RANGE selector (front panel or external control), determines the range of the bridge. The divider has a range from 1 to 10^6, and the current output of the divider is determined by

$$i_{out} = \frac{i_{in}}{N}$$

where

$$N = 1 \text{ to } 10^6$$

Table 3-1 lists the range limits and accuracy.

Voltage-to-Voltage Amplifier. The voltage-to-voltage amplifier consists of the isolation amplifier (Q1-Q4) and the differential amplifier (Q5-Q9). As mentioned previously, the isolation amplifier serves as a buffer for the high voltage (HV) probe. The amplifier has unity gain. Q31 serves as a switch to quickly discharge C1, following the application of a bias voltage. Figure 4-7 shows a simplified schematic of the amplifier.

The voltage at point B is one-half that at point A. When the input voltage increases rapidly due to a sudden application of bias, Q35, Q36 and Q31 are turned on, causing C1 to discharge quickly to ground through Q31.

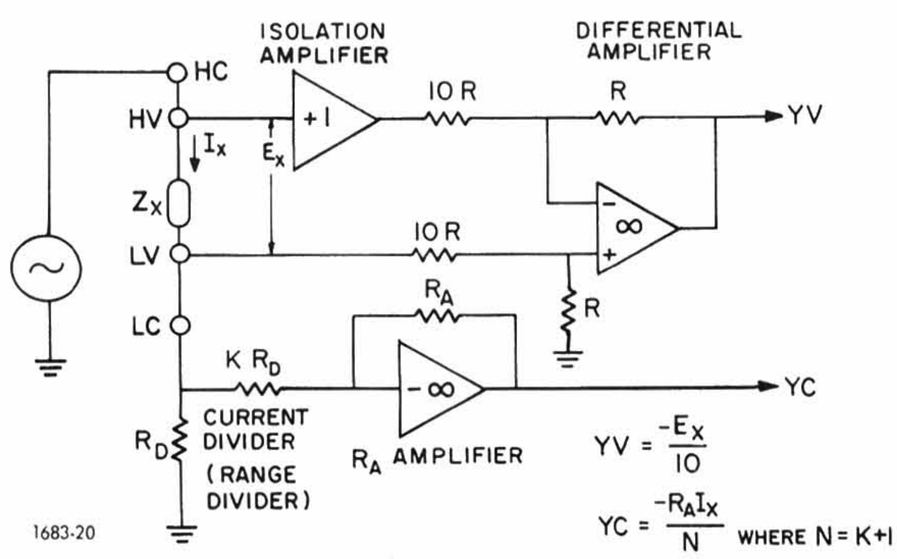

Figure 4-6. Y-bridge block diagram.

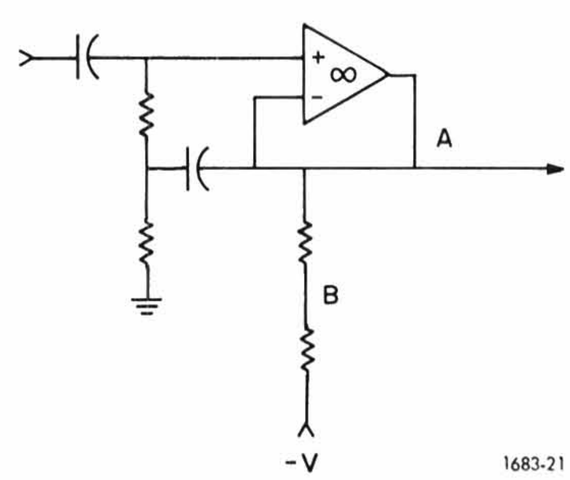

Figure 4-7. Simplified schematic of amplifier.

File Courtesy of GRWiki.org

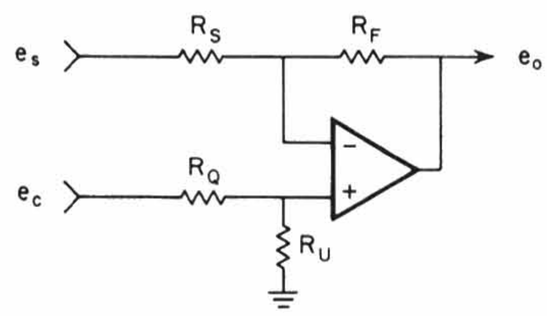

Figure 4-8. Differential amplifier.

The differential amplifier is a standard type amplifier. Figure 4-8 shows the amplifier.

If

$$\frac{R_U}{R_Q} = \frac{R_F}{R_S}$$

then, the output is defined by

$$e_o = \frac{-R_F}{R_s}(e_s - e_c)$$

Therefore, the output of the amplifier is proportional to the differential voltage present at the input.

The relays switch in the appropriate resistor for each range resistance. Table 4-2 is a truth table listing the logic signals, range, and relays operated by each signal. Note in the schematic $\overline{\text{PLEAKOFF}}$ from the P board de-energizes the relays, so that no current will flow through the range divider during leakage measurements.

Q10 listed in Table 4-2 is considered to be a switch. A 1 indicates a turned-on transistor, a 0 a turned-off transistor.

Range Divider. The range divider consists of Q10 and Q21-Q30; relays K1-K6; IC1-IC3 and other associated circuitry. $\overline{\text{ZRNG1}}$-$\overline{\text{ZRNG9}}$ are outputs of the range counter on the E board, routed through the Z board. These signals can also be received from external equipment when the instrument is in the remote mode of operation. CR26 and CR27 provide protection for the circuit if a charged capacitor is connected to the instrument.

Current-to-Voltage Amplifier. The current-to-voltage R_A amplifier converts the current into a voltage to drive the standards. The amplifier is a basic operational type. The transfer impedance is R_A. If the amplifier becomes saturated, a "0" $\overline{\text{YDOWN}}$ signal is produced by Q33 and Q37. This signal is fed to the range board. If the bridge is in the automatic-range mode, the signal will cause the circuit to produce a down-range command to the range counter that

Table 4-2
RELAY TRUTH TABLE

Range	Signal	Relays 1	2	3	4	5	6	7	8	9	10	11	12
0	—	0	0	0	0	0	0	0	0	0	0	0	0
1	$\overline{\text{ZRNG1}}$	1	0	0	0	0	0	0	0	1	1	1	1
2	$\overline{\text{ZRNG2}}$	0	1	0	0	0	0	0	0	1	1	1	1
3	$\overline{\text{ZRNG3}}$	0	0	1	0	0	0	0	0	1	1	1	1
4	$\overline{\text{ZRNG4}}$	0	0	0	1	0	0	0	0	1	1	1	1
5	$\overline{\text{ZRNG5}}$	0	0	0	0	1	0	0	0	1	1	1	1
6	$\overline{\text{ZRNG6}}$	0	0	0	0	0	1	0	0	1	1	1	1
7	$\overline{\text{ZRNG7}}$	0	0	0	0	0	0	1	1	0	0	1	1
8	$\overline{\text{ZRNG8}}$	0	0	0	0	0	0	1	1	0	0	0	1
9	$\overline{\text{ZRNG9}}$	0	0	0	0	0	0	1	1	0	0	0	0

File Courtesy of GRWiki.org

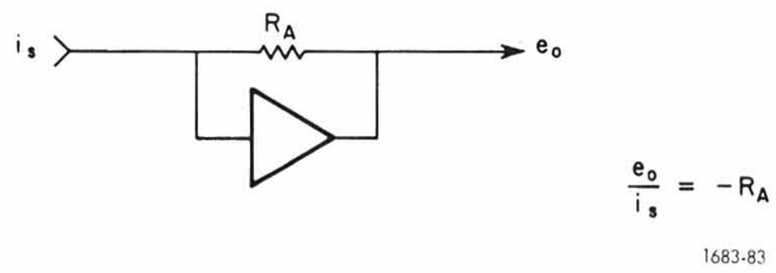

Figure 4-9. R_A amplifier.

controls the current divider. It will also be used to light the front-panel RANGE indicator.

Figure 4-9 shows the R_A amplifier. As indicated, R_A is the transfer impedance of the amplifier.

4.4.5 K, C, and B Dividers (Figures 6-14, 6-5, and 6-6).

General. With the Y-bridge circuit, the K-, C-, and B-divider boards can be switched by the function selector to form three elementary bridge configurations for measuring: (1) C with D as a loss, (2) C with equivalent series resistance (ESR) as a loss, and (3) L_s and R_s. Figures 4-10 through 4-12 show a functional representation of the three configurations. The C divider is an available accessory for ESR measurements.

The formula for C with D as a loss is derived as follows:

At balance (null)

$$i_a + i_b + i_c = 0$$

or

$$-e_a \alpha_S C_S + e_b G_B + e_b \beta_S C_B = 0$$

but

$$e_a = -i_x \left(R_x + \frac{1}{SC_x}\right) \frac{1}{10}$$

and

$$e_b = \frac{-i_x R_A}{N}$$

Substituting and rearranging:

$$C_x = \frac{\alpha N C_S}{10 R_A G_B}$$

$$D_x = \omega\beta R_B C_B$$

For ESR make all β's $\equiv \alpha\beta$

$$C_x = \frac{\alpha N C_S}{10 R_A G_B}$$

$$R_x = \frac{\beta R_A 10}{N} \bullet \frac{C_B}{C_S}$$

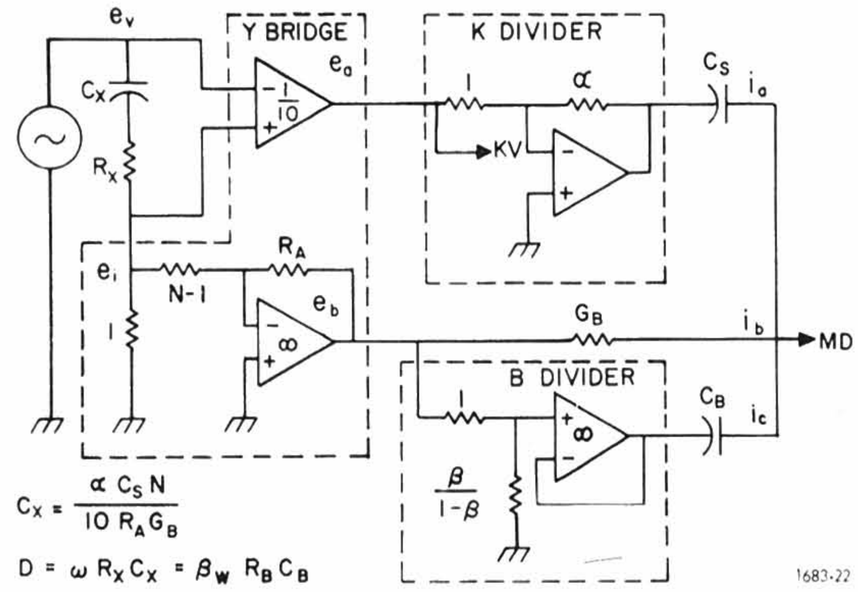

Figure 4-10. Cs with D as a loss bridge configuration.

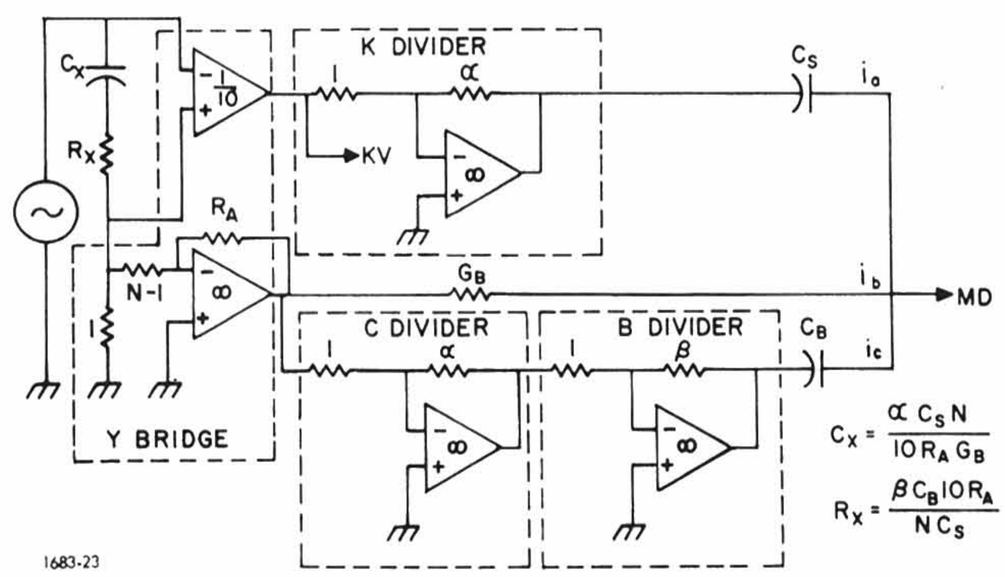

Figure 4-11. Cs with equivalent series resistance bridge configuration.

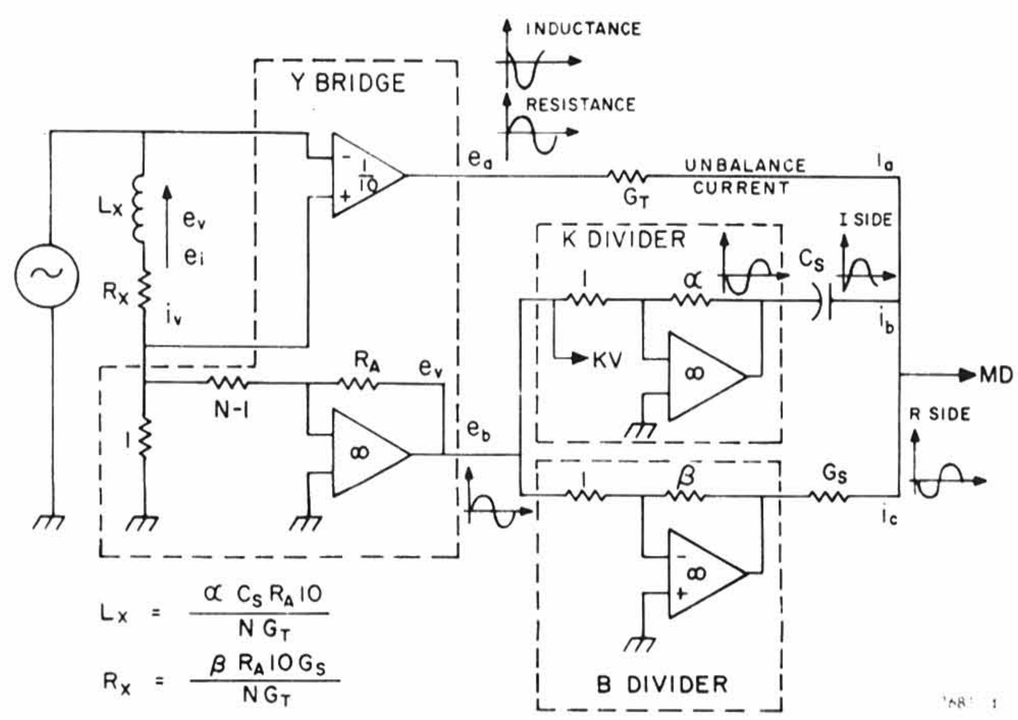

Figure 4-12. Ls with Rs bridge configuration.

File Courtesy of GRWiki.org

The formula for Ls with Rs is derived as follows:

At balance

$$i_a + i_b + i_c = 0$$

or

$$e_a G_T - e_b \alpha_S C_S - e_b \beta G_S = 0$$

but

$$e_a = -i_x \frac{(R_x + SL_x)}{10}$$

$$e_b = \frac{-i_x R_A}{N}$$

Substituting and rearranging:

$$L_x = \frac{\alpha C_S 10 R_A}{N G_T}$$

$$R_x = \frac{\beta R_A 10 G_S}{N G_T}$$

As shown in the figures, the three bridge configurations are obtained by interchanging the standards. The standards (G_T, G_s, C_S, B_G, and C_B) are selected so that the values of the dividers give a direct reading of the unknown impedance. The outputs of reversible counters vary the resistive dividers in the divider circuits that reduce error signals to effect a balance. The counters accumulate the amount of attenuation or non-attenuation required to do this and therefore drive the displays to indicate the value of the part under test. The three divider boards are similar, except switch drivers for the C board are on the K board, and the B board has a provision for two configurations of the operational amplifier. Each divider consists of transistor switches with drivers, a set of weighted conductances (ladder network), and an operational amplifier. The dividers control the voltages applied to the capacitance and conductance standards and are controlled by binary outputs from the reversible counters. (Refer to paragraph 4.4.12).

Ladder Network. Figure 4-13 shows the equivalent divider circuit.

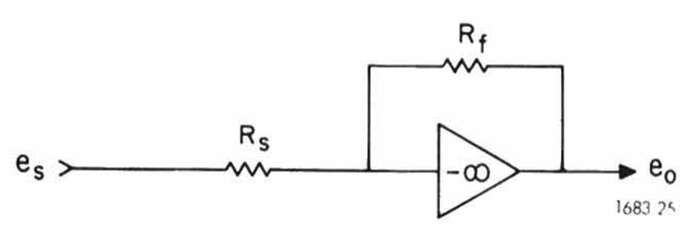

Figure 4-13. Equivalent divider circuit.

Therefore,

$$\frac{e_o}{e_s} = \frac{-R_f}{R_s} = -\alpha$$

where

$$\frac{R_f}{1.9999} \leqslant R_s \leqslant \infty$$

so that

$$0 \leqslant \alpha \leqslant 1.9999$$

R_s is the effective resistance of the ladder network (Figure 4-14), where individual resistors, or conductances, are either connected to ground or the voltage source. Each element of the network is weighted, so that the output is varied in discrete steps from 0 to 1.9999. The divider is comprised of four decades and one spillover (tens-of-thousands) digit. Figure 4-14 shows an equivalent circuit of the ladder network (one decade of the divider). The spillover digit is not shown.

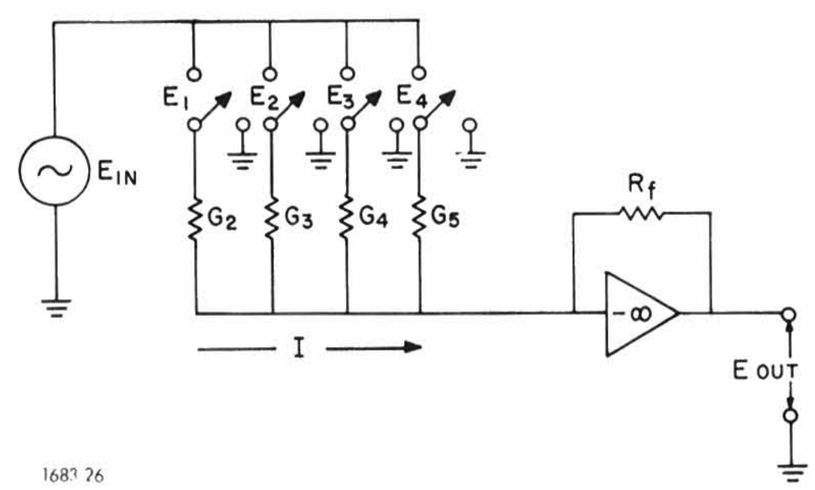

Figure 4-14. Ladder network equivalent circuit.

For the circuit, $E_{out} = -E_{IN} R_f G_w$. Each conductance is weighted in a 1-2-4-2 code. A diode conversion matrix converts the decade counter outputs (1-2-4-8) to 1-2-4-2 for the conductance ladder. In the 1-2-4-2 code, for example:

$G_2 = 0.1$
$G_3 = 0.2$
$G_4 = 0.4$
$G_5 = 0.2$

If $E_{IN} = -1$ V and $R_f = 1$, then any value of voltage E_{OUT} can be obtained in 0.1-V increments by switching in one or more of the four weighted conductances. For example, if G_3 and G_4 are switched in:

$$E_{OUT} = -(-1)\ (1)\ (0.2 + 0.4) = 0.6 \text{ V}$$

Higher voltages and finer increments are obtained by the addition of more weighted conductances. Each divider

File Courtesy of GRWiki.org

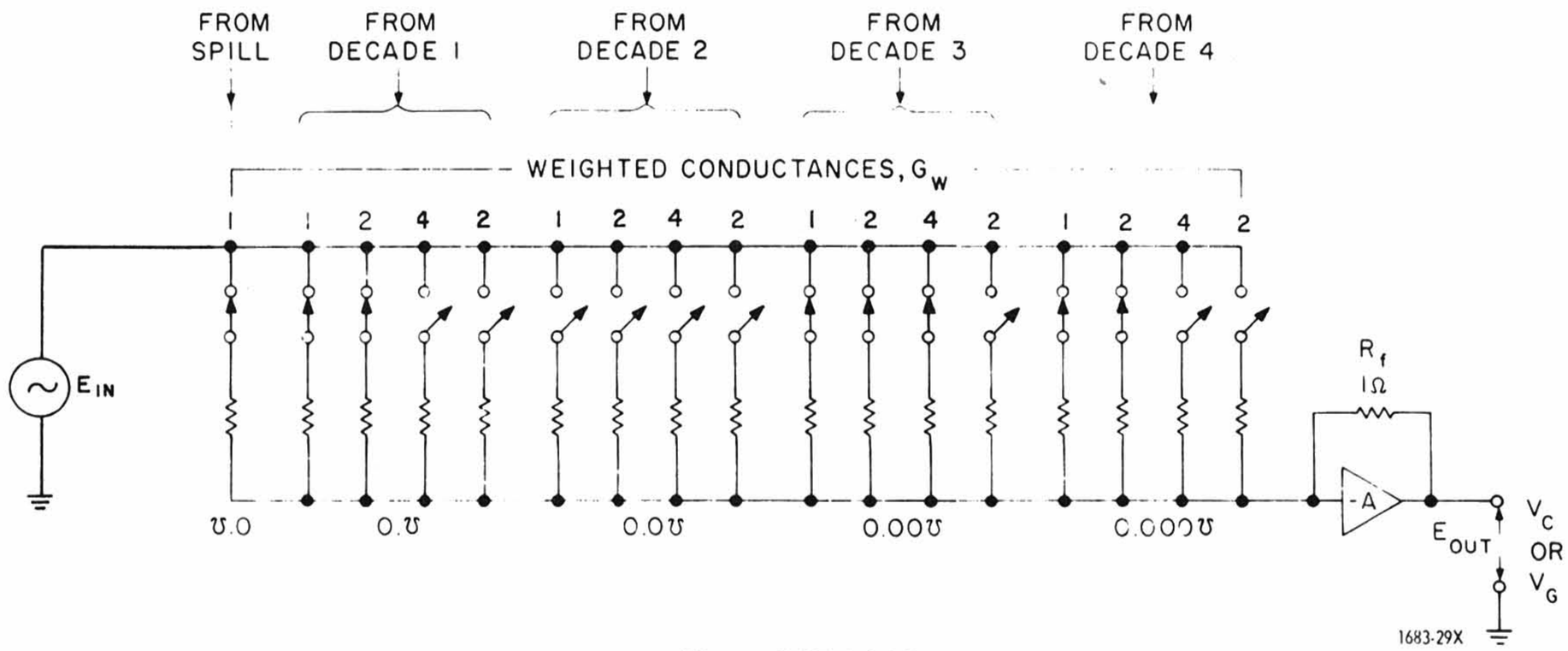

Figure 4-15. Divider.

contains the equivalent of 17 weighted conductances that allow E_{OUT} to be any value from 0 to 1,9999 V. Figure 4-15 shows a representation of the divider.

Figure 4-16 shows an example of what the output would be with the switches closed as shown in the figure. Bear in mind that a matrix (shown in Figure 4-20) is used to convert the code to 1-2-4-8. A closure of the last "2" switch in any decade produces an 8-count code indication.

$$
\begin{aligned}
E_{OUT} = (+1)\ (1)\ (1.0 &+ \\
0.1 &+ \\
0.2 &+ \\
0.00 &+ \\
0.001 &+ \\
0.002 &+ \\
0.004 &+ \\
0.0001 &+ \\
0.0002 &= \\
\hline
+\ 1.\ 3\ 0\ 7\ 3 &\ \text{volts}
\end{aligned}
$$

Figure 4-16. Divider output.

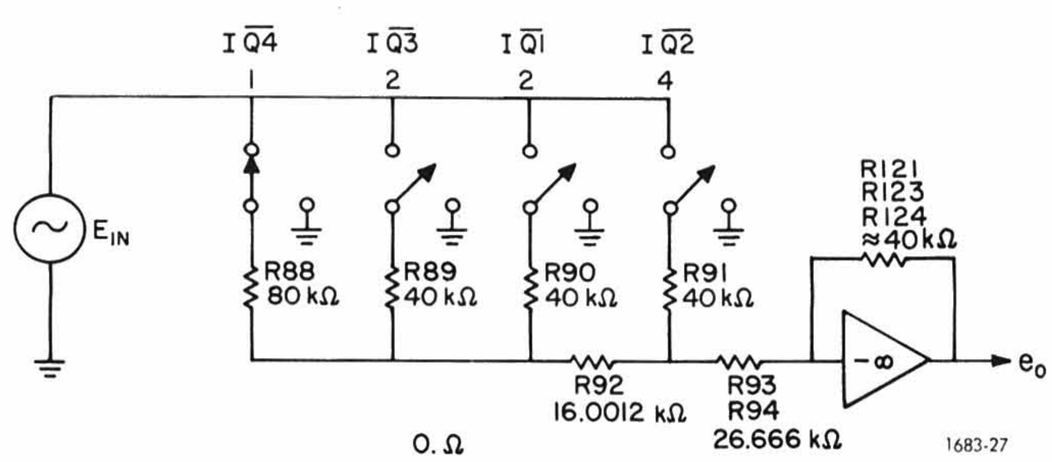

Figure 4-17. Ladder network.

The circuit incorporates a ladder network for each weighted-conductance group. Figure 4-17 shows a ladder network for a typical decade on a divider board.

R_f consists of R121 in series with the parallel combination of R123 and R124, for a total value of 40 kΩ. The equivalent conductances range from 2.5 n℧ for a 100-μV output to 25 μ℧ for a 1-V output.

The output, e_o, is defined by

$$e_o \approx -E_{IN}\,(\overline{IQ4} + 2\,\overline{IQ3} + 2\,\overline{IQ1} + 4\,\overline{IQ2})\left(\frac{40\ k\Omega}{400\ k\Omega}\right)$$

where IQ; = "0" for switch to ground
= "1" for switch to E_{IN}

Amplifier.

Figure 4-18 shows equivalent circuits of the network.

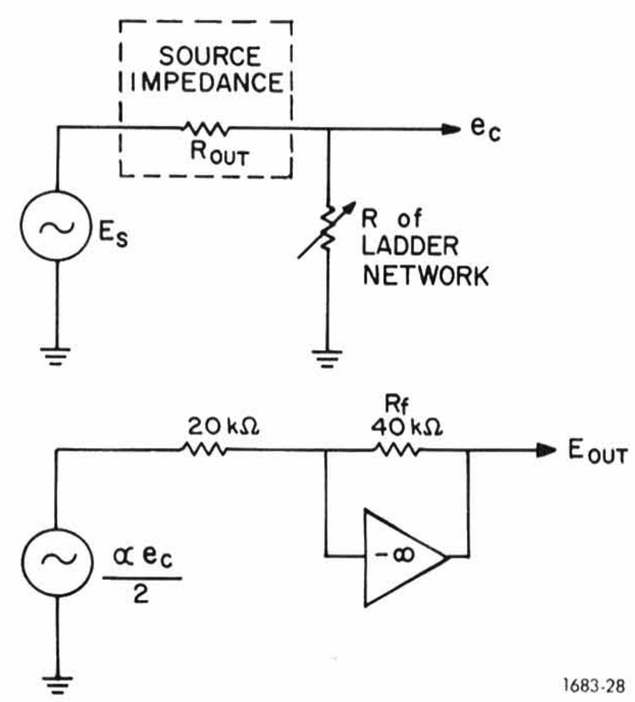

Figure 4-18. Equivalent circuits.

File Courtesy of GRWiki.org

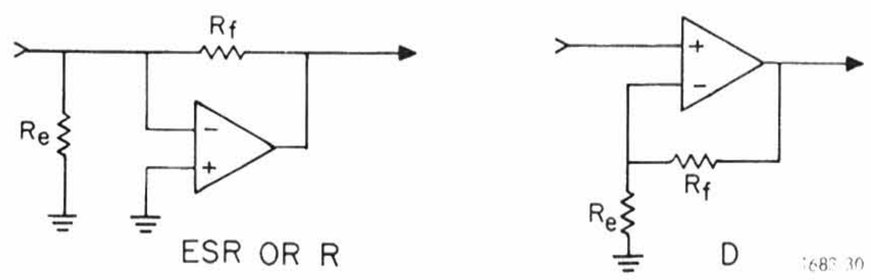

Figure 4-19. Equivalent circuits.

The amplifier always sees 20 kΩ for a source impedance. The amplifiers produce a 180° phase shift of the signal. The B-divider circuit (for C_s measurements) has two amplifier configurations; one for dissipation-factor measurements and one for resistance measurements. The applicable configuration is switched by the front-panel function switch. When measuring dissipation factor, relay K25 is activated, closing a contact and applying the signal to the plus (+) input of the amplifier. Relays K24 and K26 are de-energized, preventing the signal from being applied to the negative (−) input and allowing the positive side to be activated. When resistance is being measured, the opposite happens, the signal being applied to the negative input. Figure 4-19 shows the equivalent circuits for both conditions.

For resistance measurements there is a 180° phase shift; for dissipation factor measurements there is no phase shift.

Input Relays. The relays at the inputs to the divider circuits switch in the applicable path (or divider) for the function being measured. The function selector produces signals ZS1 through ZS4 that control these relays. These signals (ZS1-ZS4) can also be supplied either by the front-panel function switch or the AUXILIARY connector. The external signals are $\overline{LR}$, $\overline{CD}$, and $\overline{CR}$ for function control and $\overline{1000}$ for frequency control. Refer to paragraph 4.4.13 for a further description of these signals.

The C-board amplifier has two feedback resistances, R_f; one of approximately 30 kΩ for 120-Hz operation and one of approximately 25 kΩ for 1-kHz operation. When the function selector is set to 120 Hz, relay K40 is de-energized. Relay contact K40S is opened, and the signal is passed through the parallel combination of R121 and R122 in series with R123, R124 and the parallel combination of R125 and R126. When the selector is set to 1 kHz, the relay is energized, closing the contact and thereby bypassing R121, R122, and R123.

Adjustments. All the operational amplifiers have adjustments for precisely setting the gain. The C board has two adjustments – R121 and R125 – for setting the gain at .01%.

The B-board amplifier has three adjustments; C15, R133, and R124. C15 is a phase adjustment for a zero

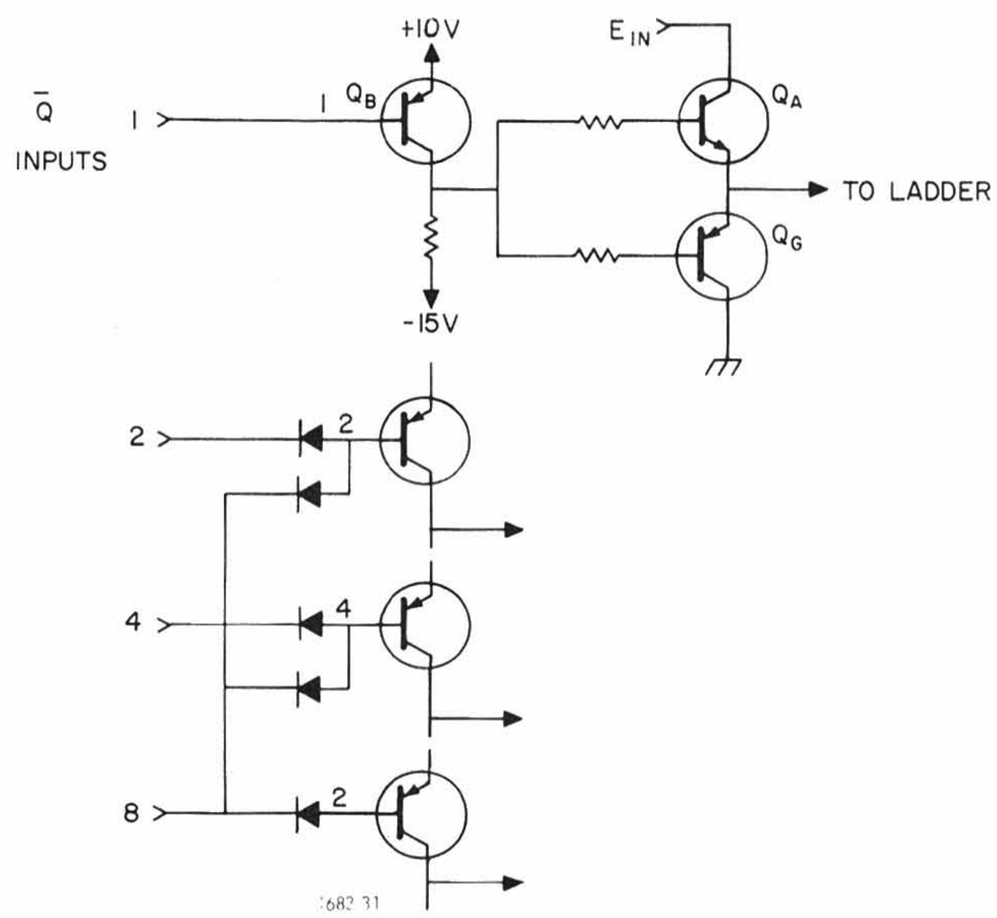

Figure 4-20. Conversion matrix.

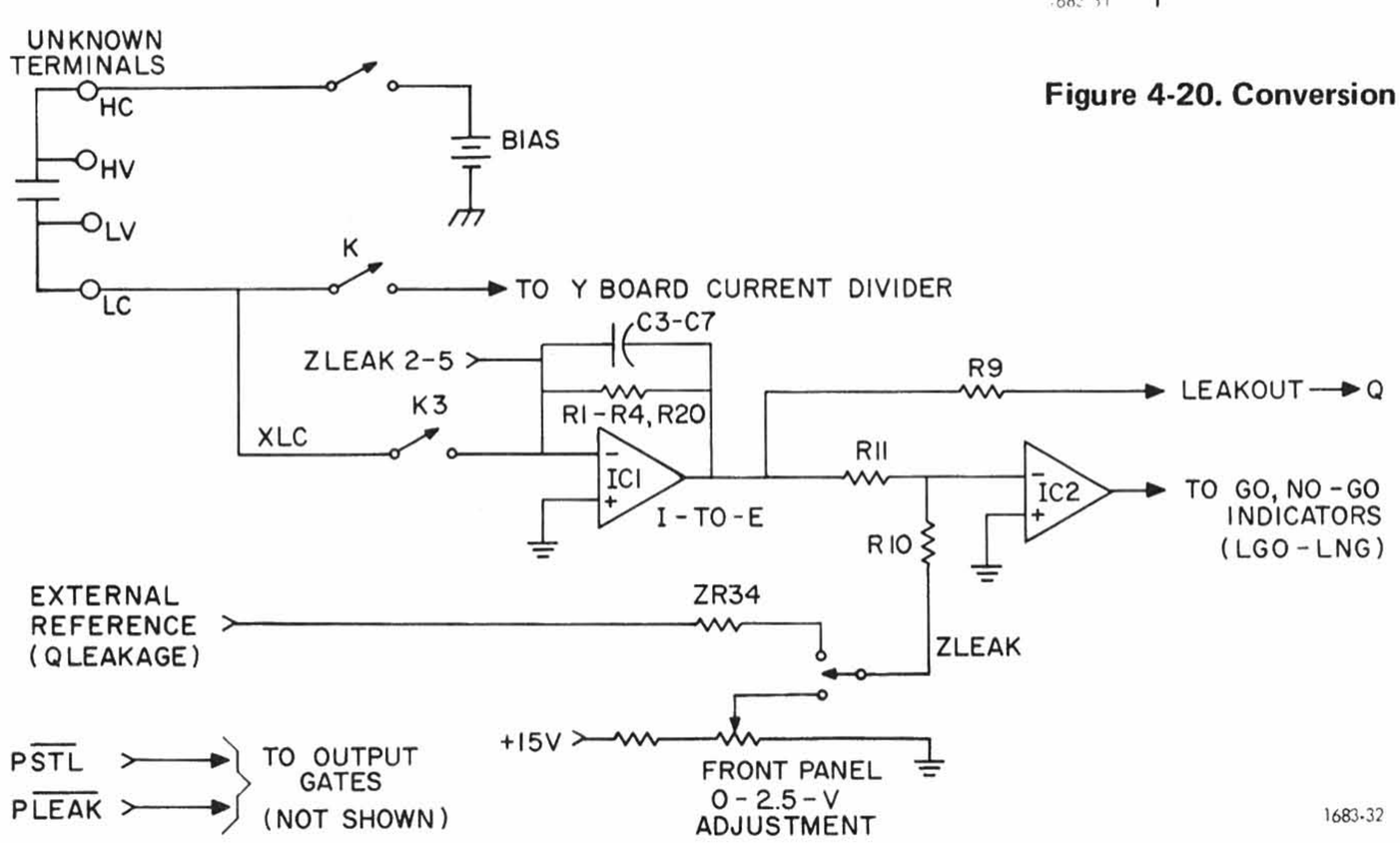

Figure 4-21. Leakage-current circuit block diagram.

File Courtesy of GRWiki.org

Table 4-3
MAGNITUDE OF RANGE AND
FEEDBACK NETWORK FOR EACH LEAKAGE RANGE

Range	Network		Switch
	R_F (Ω)	C_F (μF)	
1 μA (0.1-2.5 μA)	R20, 1 M	C7, .01	Always in network
10 μA (1-25 μA)	R4, 110 k	C6, 0.1	Q6 FET
100 μA (10-250 μA)	R3, 10.1 k	C5, 1.0	Q5 FET
1 mA (0.1-2.5 mA)	R2, 1 k	C4, 10	K2
10 mA (1-25 mA)	R1, 100	C3, 120	K1

phase shift. R133 and R124 are adjustments to set the gain to .01%.

The K board has one adjustment, R124. This adjustment is for setting the accuracy of the gain.

Switch Matrix. The switches that control the weighted conductances, as represented in Figure 4-15, are driven by the $\overline{Q}$ outputs of the counters (1I and 2I). The counter decade weighting is 1-2-4-8, and the divider weighting is 1-2-4-2, making a diode conversion matrix necessary to perform the conversion. Figure 4-20 shows the matrix.

As shown, when $\overline{Q}$ is a "0" the drive transistor, Q_B, is turned on, Q_A turns on and connects E_{IN} to the leg of the ladder. If $\overline{Q}$ is a "1", Q_B is off, making the bases of Q_A and Q_G negative. Q_A is then off, and Q_G is on, connecting that leg of the ladder to ground. The diodes convert the digital weighting from 1-2-4-8 to 1-2-4-2.

4.4.6 Leakage-Current Circuit (Figure 6-15).

The leakage-current circuit (L board), an available accessory, measures the leakage current through a capacitor under bias. Figure 4-21 shows a functional block diagram of the circuit and its associated circuits. The circuit consists of an amplifier, comparator, and gate section. When the instrument is in the LEAKAGE mode, relay K on the Y divider board and transistor switch Q5-Q6 on the T board open. This shuts down the bridge and disables the oscillator. K3 on the L board closes, allowing leakage current to flow into amplifier IC1, which converts the current to a voltage. Figure 4-22 shows an equivalent circuit of the measurement network and the amplifier.

The current can be measured in five ranges by changing the feedback network of the amplifier with the front-panel LEAKAGE control. Table 4-3 lists the magnitude of each range and the feedback network for each range. The "Switch" column designates the transistor switch or relay that switches in the applicable components.

The appropriate $\overline{\text{ZLEAK2-5}}$ signal is "0" when the applicable range is selected with the LEAKAGE selector (front panel or external control). If the LEAKAGE switch is set to REMOTE, gates on the Q board are enabled, allowing signals $\overline{\text{ZLEAK2-5}}$, ZLEAK, and LEAKOFF to be applied through the AUXILIARY socket from peripheral equipment if desired. Signal LEAKOUT, a 0-to-2.5-V signal, can be fed through the AUXILIARY socket for measurement by a meter, if desired. The voltage of this signal is proportional to the leakage current on each range. For example, 0.5 V equals 0.5 μA, 5 μA, 50 mA, etc.

Amplifier IC1 has a one-to-one current-to-voltage ratio. For example, for 0.5 μA there will be a 0.5-V output. (The output is a negative voltage.) The dc gain of the amplifier equals R_F/R_S, and the output will swing at TP1 between 0 and −2.5 V on each range. This voltage is compared by IC2 with a preset reference voltage (ZLEAK) selected by the front-panel LEAKAGE 0–2.5 control or applied externally

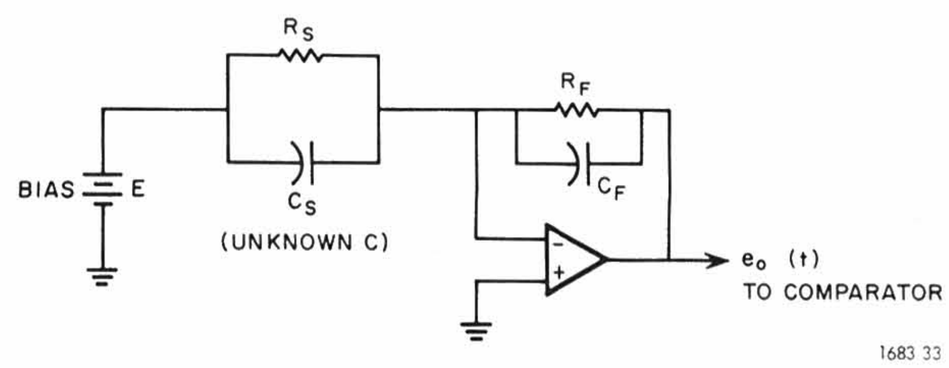

Figure 4-22. Equivalent circuit.

File Courtesy of GRWiki.org

through the AUXILIARY socket and Q board when the instrument is in remote operation.

IC2 is a comparator. If the leakage voltage does not exceed the preset voltage, LGO will go to "1". The voltage at the input to the comparator is positive in the initial state due to the positive reference voltage, ZLEAK. The output of IC2 is "0" and the NO-GO indicator is turned on. As soon as the leakage-current measurement is started, $\overline{\text{PSTL}}$ from the start circuit on the P board goes "0" for a short time and inhibits any transients due to relay "bounce", PLEAK from flip-flop IC28 on the P board also goes to "0" for a short time when a leakage measurement starts, to reset the "go" flip-flop to "no-go". (When leakage is being measured, signal $\overline{\text{ZLEAKOFF}}$ on the Z board disables the gates to the "go" flip-flop.)

Upon application of bias, the input to IC2 goes negative when K3 closes; the junction between R11 and C9 goes negative then starts to return exponentially to a level determined by the leakage current. The negative voltage causes the output of IC2 to go to "1". If the leakage voltage is equal to or exceeds the 0-V level (see Fig. 4-23), a "0" will be produced at the output of IC2, producing a "1" LGO signal that will turn on the GO indicator ($\overline{\text{PLEAK}}$ and $\overline{\text{PSTL}}$ having returned to "1" before this time). If the voltage due to the leakage current does not exceed the reference, the output of IC2 will remain "1" and the NO GO indicator will remain lighted.

The reference voltage is applied according to the limit established with the LEAKAGE control. Figure 4-23 illustrates the typical waveforms at test points TP1 and TP3 at the input to IC2.

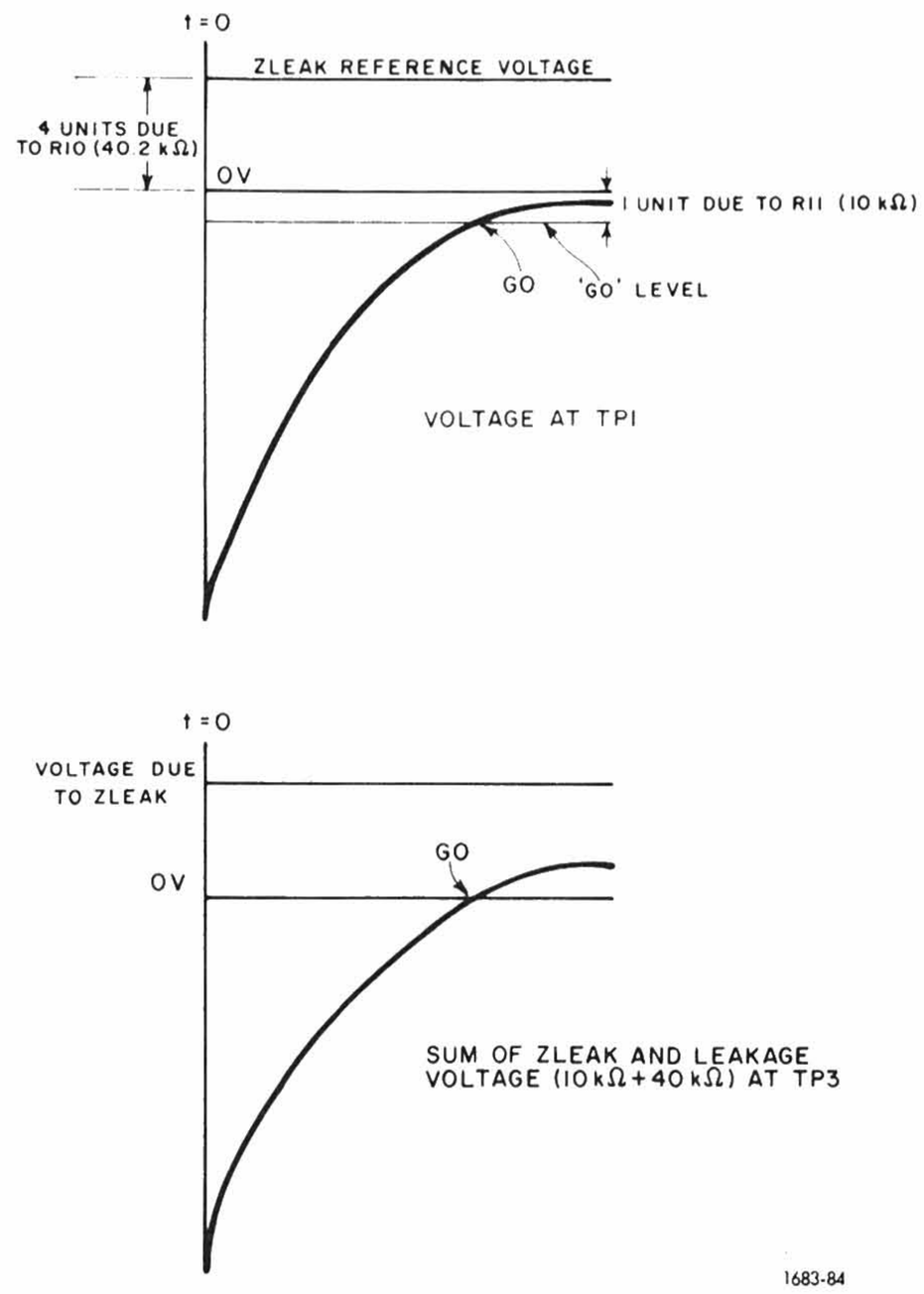

Figure 4-23. Voltage waveforms.

The rate of the leakage-current measurement is determined by the setting of the front-panel VARIABLE MEAS. RATE control. A capacitance measurement occurs right after a "go" indication, the negative-going LNG signal having initiated a start pulse on the P board. If a "no go" indication remains, the capacitance measurement occurs at a time determined by the VARIABLE MEAS RATE control. Signal REMGO is applied through the AUXILIARY socket for driving an external indicator or equipment if desired, when measuring externally applied leakage current. Figure 6-15 illustrates the circuit operation when measuring externally applied leakage current.

4.4.7 Mother Board (Figure 6-18).

The mother board (M board) occupies the bottom position in the instrument (Figure 5-5) and serves as an intraconnecting assembly for all the circuit boards and a mounting device for the standards. The circuit boards plug into sockets mounted on the mother board; etched conductors on the board carry the signals between the boards. The standards mounted on the board are the capacitor standards C_S and C_B and resistor standards G_S (R_1), G_B (R_2) and G_T (R_3) and associated circuitry, as well as relays K2-K7 and their drivers, Q1-Q6, that switch in the applicable standards for measurement and applicable capacitors for the 120-Hz and 1-kHz measurement frequencies.

Capacitors C5-C14, used with standards C_S and C_B, provide trimmers for the standards, to increase the accuracy to .01%. The inverters (IC1 and IC2), transistors (Q1-Q6), and relays are connected in such a manner that signals ZS2 and ZS3 switch in the applicable standards for F and H measurements and capacitance for 120-Hz or 1-kHz measurements.

Signals ZS2 and ZS3 are produced by the front-panel function control or from externally supplied signals ($\overline{\text{LR}}$ and $\overline{\text{1000}}$, respectively). Table 4-4 lists the logical levels of ZS2 and ZS3 for each selected function. The table also shows the state of the relays for each function. A 1 indicates the relay is energized with its contacts closed. When energized, the relays switch in the standards listed in the table, under the applicable relay.

Error signal MD is then applied to the detector circuit. Paragraph 4.2 contains a description of how error signal MD is produced.

Signals routed through the mother board can be traced using the etched board layout and the signal run list. Refer to Section 6, if necessary, for a description of how to trace signals.

File Courtesy of GRWiki.org

Table 4-4
MOTHER BOARD RELAY SWITCHING

Function	Logic Signals		Relays*						
	ZS2	ZS3	K1	K2	K3	K4	K5	K6	K7
LsRs 120 Hz	"1"	"0"	1	1	0	0	0	0	1
LsRs 1 kHz	"1"	"1"	1	0	1	0	0	0	1
CsD 120 Hz	"0"	"0"	0	1	0	1	1	0	0
CsD 1 kHz	"0"	"1"	0	0	1	1	0	1	0
CsRs 120 Hz	"0"	"0"	0	1	0	1	1	0	0
CsRs 1 kHz	"0"	"1"	0	0	1	1	0	1	0
			A 1 Switches In:						
			G_T (R3)	C_S (C1)	C_S (C1)	G_B (R2)	C_B (C1)	C_B (C2)	G_S (R1)
				C10	C12		C5	C7	
				C11	C13		C6	C8	
					C14			C9	

*A 1 for the relay condition indicates that the relay is energized.

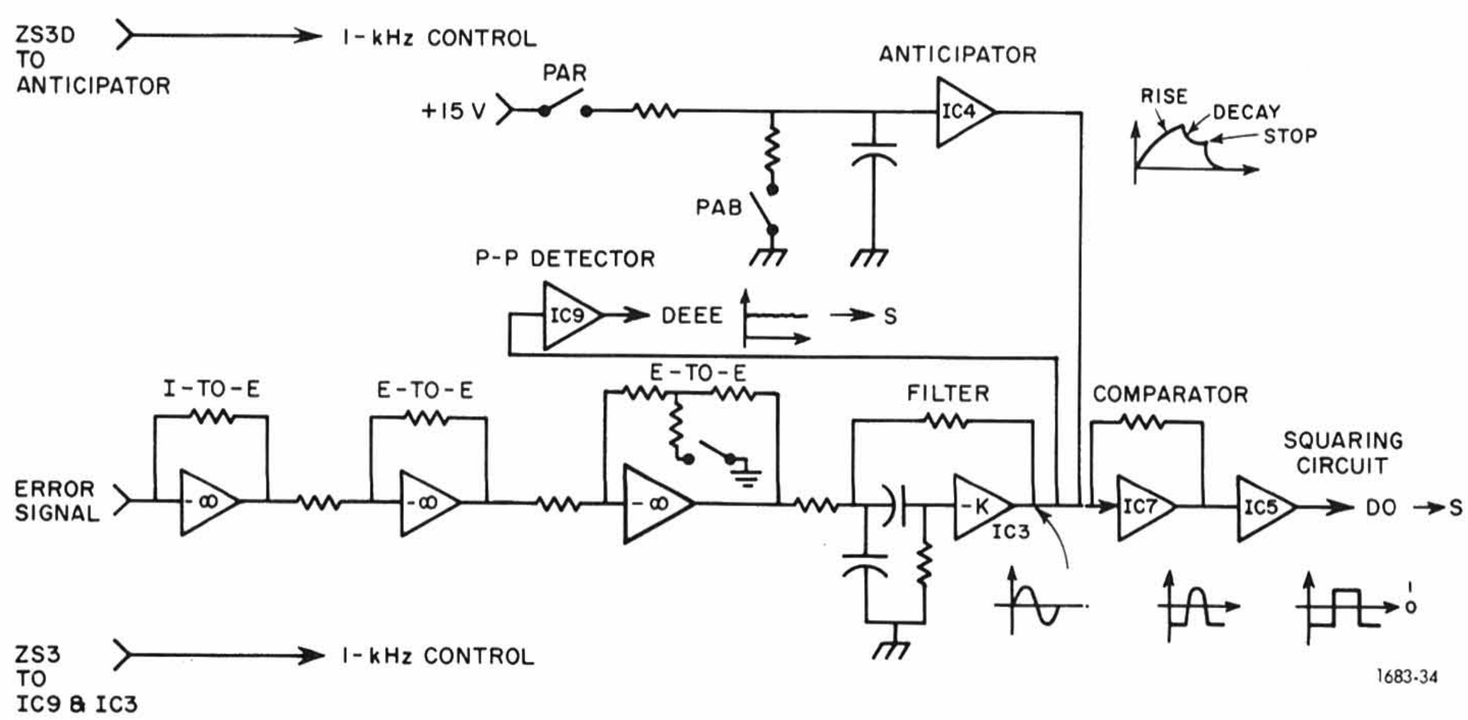

Figure 4-24. Detector circuit block diagram.

File Courtesy of GRWiki.org

4.4.8 Detector Circuit (Figure 6-7).

General. The detector circuit (D board) consists of four major sections:

1. Preamplifier
2. Anticipator
3. Comparator
4. Peak detector.

Figure 4-24 shows a block diagram of the circuit. The preamplifier section converts the current to a voltage, amplifies the voltage, filters the signal, and applies the signal to the comparator.

The error signal is applied to a peak detector that produces an output level proportional to the error voltage. The resultant level, DEEE, is fed to the S board, where the signal is used to indicate if an error is less than 500 counts or 100 counts and thereby control accordingly the rate of the reference clock, SVCO.

The output of filter IC3 is added to the anticipator function and amplified by IC7. IC5 squares the output of IC7. The resultant logic levels control the phase detector flip-flops on the P board.

The anticipator is a floating null that works to minimize the effects of time delays in the servo loop described in paragraph 4.2. The anticipator is driven by the anticipator driver on the P board. This circuit is in turn driven by the direction control flip-flops and the START signal (either the one produced by the front-panel START pushbutton, and external source, or automatically produced on the P board at the start of a new balance). The anticipator causes the bridge to balance more rapidly than conventional methods allow. This is done by producing a signal that compensates for the time delay encountered by the error signal when passing through the preamplifier and filter.

The signal produced by the anticipator simulates the point at which a zero crossing of the error signal would occur had there been no signal delay produced by the preamplifier. The anticipator signal is then added to the error signal and fed to the comparator. It is also fed to the small circuit board on the bottom of the mother board to prevent a slower clock from occurring while the 2I counter is counting. (Refer to para. 4.4.9.)

Preamplifier. The preamplifier consists of four cascaded amplifiers, Q1-Q3 and IC1 and IC3. The overall phase shift produced by the amplifier (output of IC3) is 180°. The first stage converts the error current to a voltage. The second stage, IC1, has a gain of approximately 20 for inductance and resistance measurements and 30 for capacitance measurements. Diodes CR2 to CR7 and CR23 and CR24 limit the output swing of each stage, so that the amplifiers will not saturate. The output of the filter is also fed to a peak detector that provides an early error signal (DEEE) to the reference board for regulating the rate of the clock reference signal (SVCO) for an error indicative of less than 500 or 100 counts of error. This peak detector is similar to those on the reference board. Refer to paragraph 4.4.9 for a description.

The third stage of the amplifier, IC1, is similar to the second stage. The transfer impedance of the three stages is approximately 2 MΩ. The gain of the last stage, IC3, is approximately 5.

IC3 is part of an active filter. The bandwidth of the filter is 0.2 f_o, where f_o is the bridge frequency, 120 Hz or 1 kHz. The Q of the filter is approximately 5.

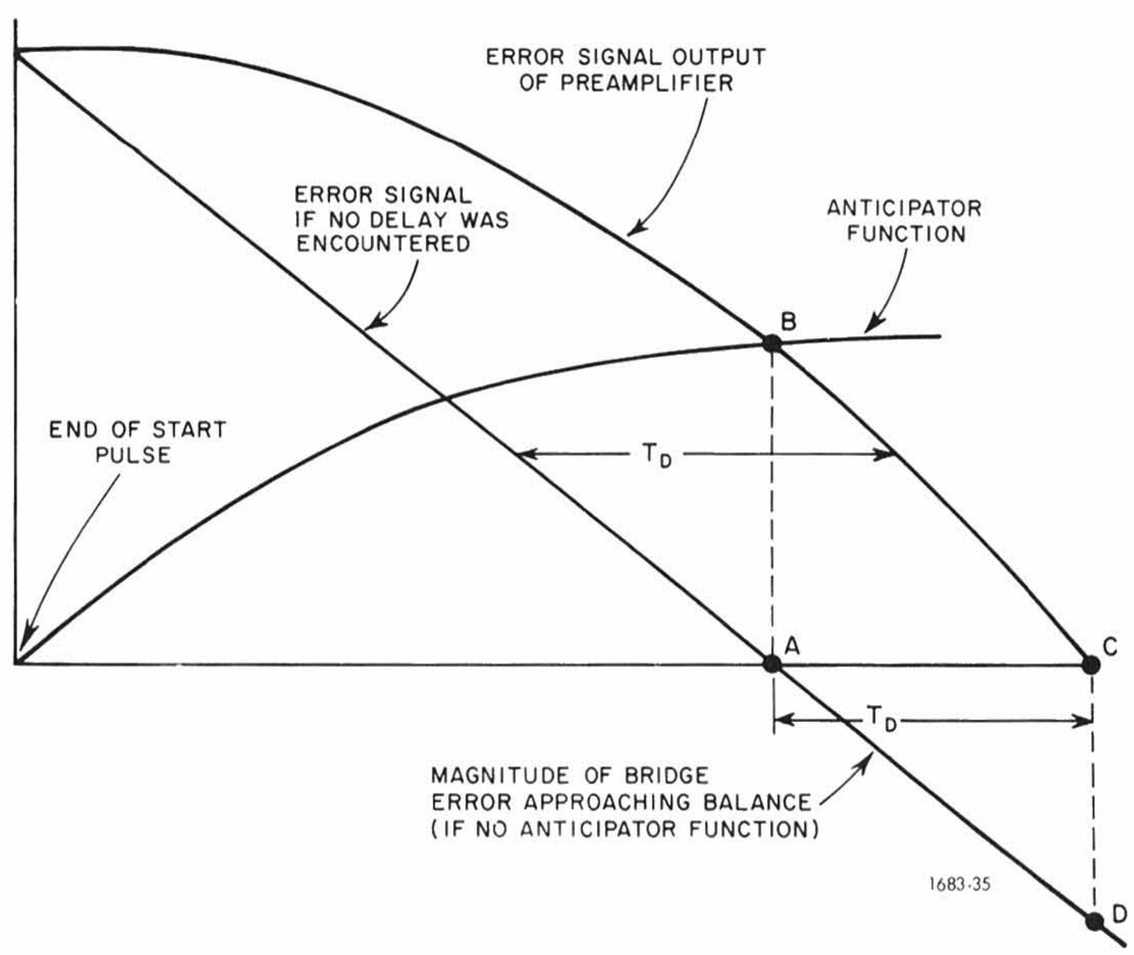

Figure 4-25. Anticipator function.

File Courtesy of GRWiki.org

Potentiometers R41 and R42 are for correcting the phase shift produced in the previous stages. C20 and C18 are switched out by signal ZS3, for 1.0-kHz measurements.

Anticipator. The comparator circuit will produce signals that ultimately control the counters. To obtain a true null when the magnitude of the error signal in the bridge reaches zero, a signal must be introduced to compensate for time delay that occurs as the error signal passes through the preamplifier. Figure 4-25 shows how the anticipator produces this compensation signal. The straight sloping line shows the signal out of the preamp if no delay occurred. The downward-sloping curved line shows a typical error output with delay. The line between points A and C, T_D, shows the delay.

If the bridge were stopped at point C where the level is 0 V, the bridge error would not be at zero but at point D. It is, therefore, necessary to stop the bridge at point B, since this is where the bridge error is actually at zero. To do this, a signal is produced by the anticipator that will anticipate where the bridge should be stopped, taking into account the time delays (T_D) between the bridge error signal and the point at which it is sampled. The anticipator function rises at the end of the start signal, until a stop is indicated by both of the direction control flip-flops on the P board. These flip-flops help control the main gates on the E board that gate clock pulses to the 1I and 2I counters. Paragraph 4.4.10 describes when these flip-flops indicate a stop. The function then decays during a stop, no counting is done during this period. If the anticipator function (level) decays to a point where the bridge error exceeds that prescribed by the anticipator function level, a control signal, DO, will be produced. Although described in detail in the following paragraph, it should be mentioned that the output of filter IC3 is added to the anticipator level in summing-amplifier IC7. If the filter output exceeds the null level of the amplifier at certain phase points, the control signal (DO) will be produced to drive the direction flip-flops on the P board. As the anticipator level drops, samples are taken, and if the filter signal exceeds the null level of the amplifier at these certain points, the anticipator will be commanded to hold while counting begins again. When a balance is approached, the anticipator level will drop again and samples will be taken again. If the signal from the filter again exceeds the amplifier null level, the anticipator will hold while a count is made. The process repeats until the anticipator level decays to the point where a null (or balance) occurs.

Figure 4-26 shows a simplified block diagram of anticipator generator and a typical exponential function produced by the generator. The exponential function is determined by C14, C15, R21 and R22. C14 is switched by signal $\overline{ZS3D}$ when 120-Hz measurements are being made. FET's having low leakage current are used to provide a good holding circuit. Table 4-5 lists a typical operational

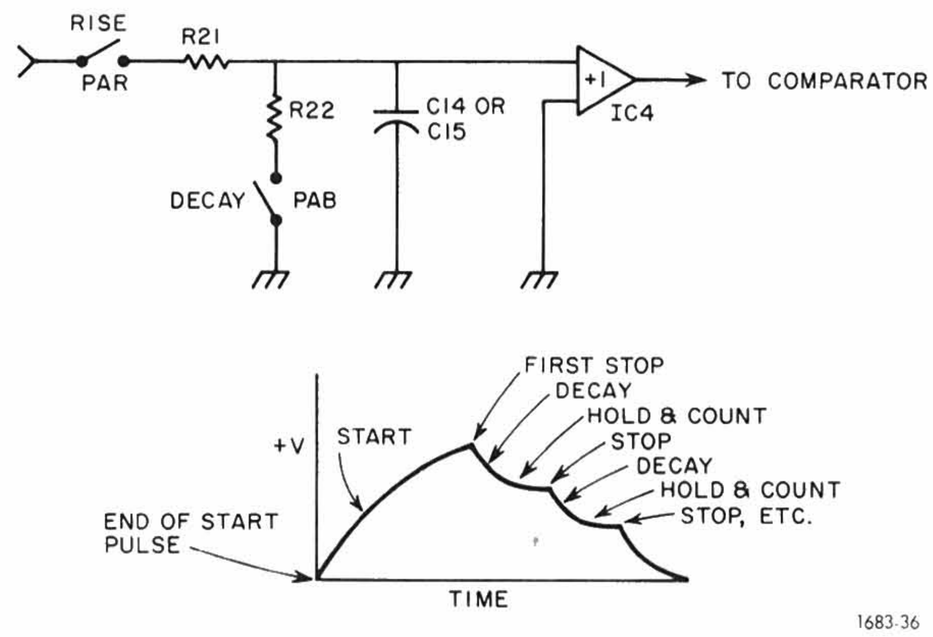

Figure 4-26. Simplified schematic of the anticipator generator and a typical function produced.

sequence. When the anticipator signal is greater than the preamplifier error signal, the comparator output is at ground. When the error signal is less than the anticipator signal, the comparator output is a "1".

Paragraph 4.4.10 gives details on the generation of the PAR and PAB signals.

R30 is a zero adjustment and R81 is a current-offset adjustment.

Comparator. The comparator consists of IC7, IC5, and Q13. IC5 adds the output of the filter to the anticipator output. Under certain conditions described further on in this paragraph, IC7 produces an output that is converted to a square wave by IC5. This produces a 5-V signal at the output of Q13. To better understand the operation of this circuit, a typical operation is as follows.

Table 4-5
ANTICIPATOR FUNCTION

Sequence	PAB	PAR	Notes
Rise	0	1	Starts rising when START signal goes to "1"
Decay	1	0	Counters off
Hold	0	0	Counting begins
Decay	1	0	Counters off
Hold	0	0	Counting begins

File Courtesy of GRWiki.org

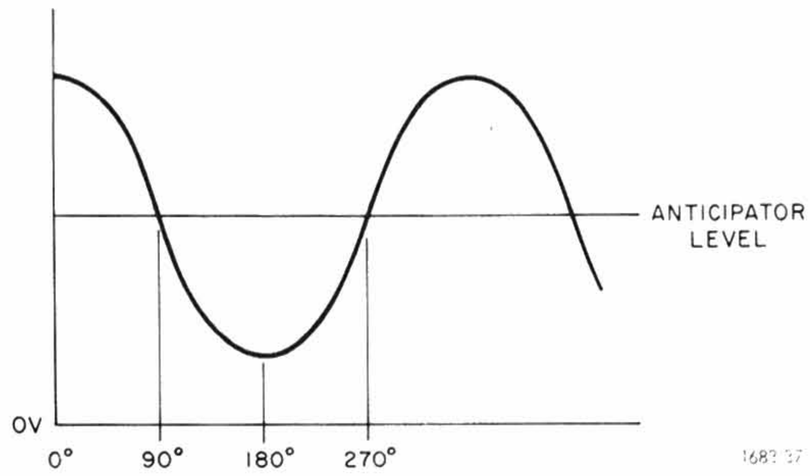

Figure 4-27. Input to IC7.

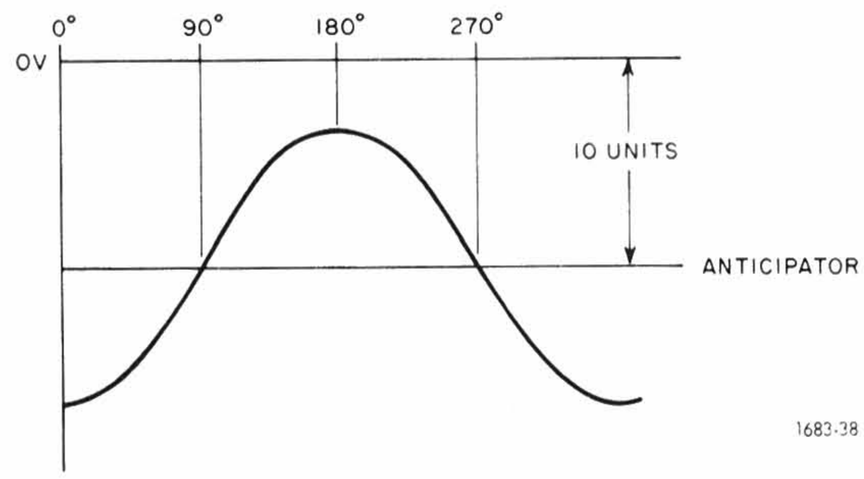

Figure 4-28. Output of IC7 (near balance).

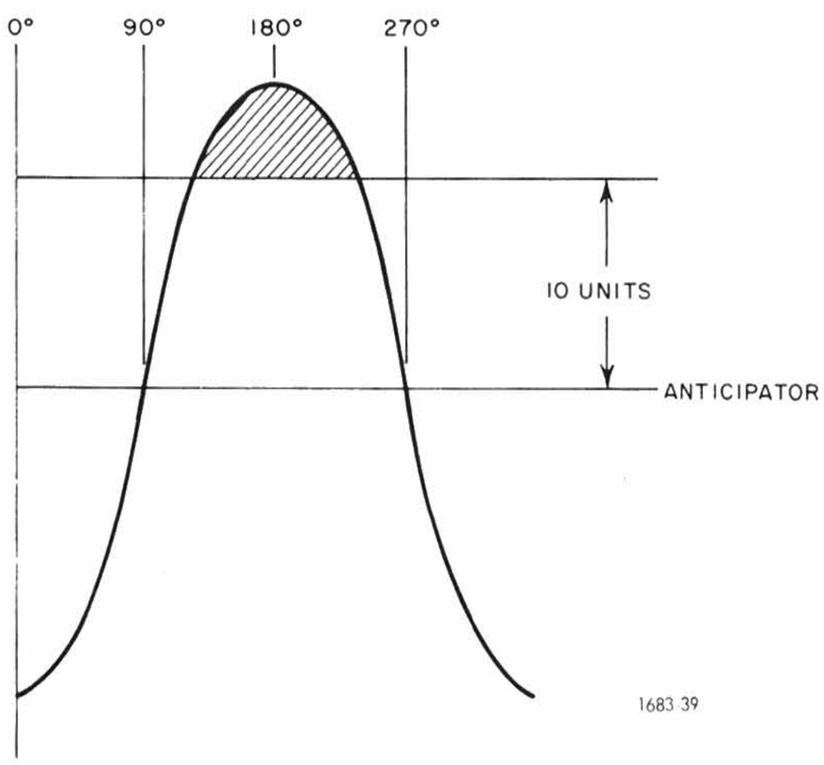

Figure 4-29. Output of IC7 (unbalanced).

The output voltage of the K divider (refer to Figure 4-12) should be a negative sine wave and I_{Cs} (i_b) should be a negative cosine; the resultant output of the filter (*IC*3) is a positive cosine. The voltage output of the B board is a negative sine wave and I_{Cs} a negative sine wave; the resultant output of the filter is a sine wave. Therefore, a positive cosine implies a high α output and the 1I counter should count reverse; a negative cosine implies a low α output and the counter should count forward. A positive sine wave implies a high β output and the 2I counter should count reverse; a negative sine wave implies a low β output and the counter should count forward.

Signal DO will be a "1" if the sum of the anticipator level and the error signal is less than 0 V. Signal DO is sampled on the P board by the 0°, 90°, 180°, and 270° phase-sampling flip-flops that determine the direction the counters should be counting, or if they should be stopped. The applicable flip-flop is set when DO is "1". Paragraph 4.4.10 describes this operation and the resultant state of the counters (counting forward, reverse, or stopped).

IC7 adds the output of the filter to the anticipator signal and inverts the resultant signal. Take the example of a cosine applied to IC7 from the filter. Figure 4-27 shows a cosine riding on the anticipator output, which is shown as an idealized level (actually it would be varying up or down and/or holding). In Figure 4-28 the signals imply a case where the bridge is near balance, since the magnitude of the signal does not exceed the null level. Figure 4-29 shows the case where the cosine exceeds the null level. (Note that before inversion by IC7, the sum of the anticipator and filter signals is less than 0 V and hence a "1" DO signal is produced.) When the error signal exceeds the anticipator level, IC5 goes to a "0" level, producing a "squared" signal that is inverted by Q13. The output is therefore a 5-V level. Figures 4-30 and 4-31 show these waveforms.

Figure 4-32 shows the input to IC7 near balance (null). Note that a phase shift occurs when the error signal goes through a null. All the waveforms presented in this paragraph are idealized.

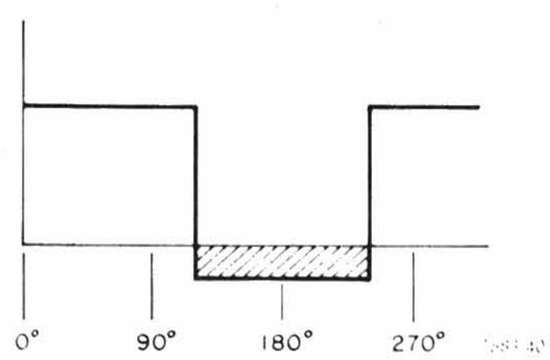

Figure 4-30. Output of IC5.

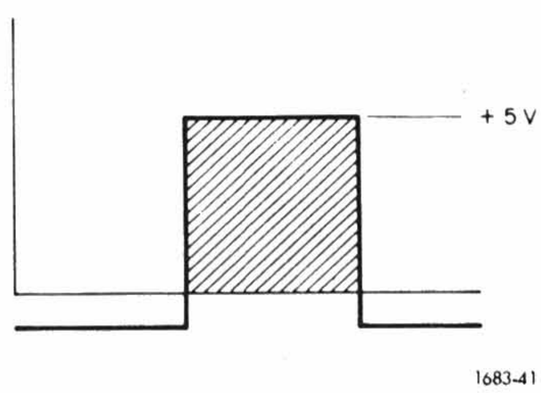

Figure 4-31. Signal DO.

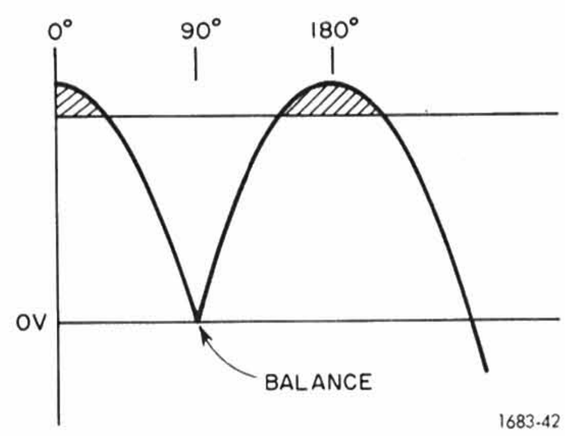

Figure 4-32. Balance.

File Courtesy of GRWiki.org

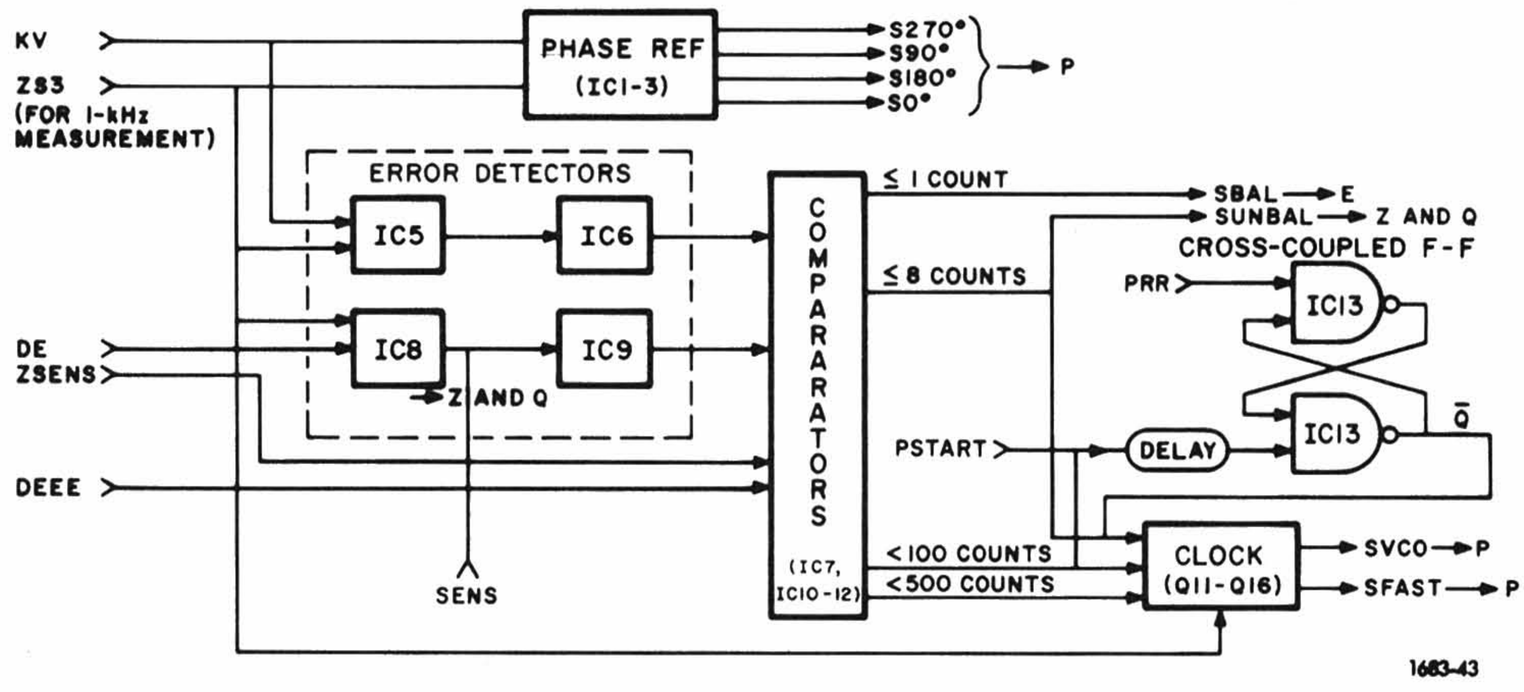

Figure 4-33. Reference circuit block diagram.

4.4.9 Reference Board (Figure 6-22).

General. The reference board (S board) has the following functions:

1. Provides 0°, 90°, 180°, and 270° phase-reference signals to the direction-control circuit on the program board, for determining the direction that the 1I and 2I counters should count (forward or reverse), or if they should stop counting.
2. Provides a signal via the Z board to the front-panel UNBALANCED indicator that will light the indicator while the bridge is unbalanced.
3. Determines from a reference signal and from error signals the range of error (counts), if any, exists at any given time.
4. Provides a clock signal whose repetition rate varies according to the magnitude of the bridge error. The signal eventually drives the 1I and 2I counter and the range counter in the range circuit (E board).

Figure 4-33 shows a detailed block diagram of the circuit. As shown, the circuit is comprised of a phase-reference circuit, error detectors, comparators, and clock.

Phase-Reference Circuit. Refer to Figure 4-34 and the schematic for the following description. Signal KV is the bridge reference signal from the K-divider board. This signal is amplified by IC1 and limited by Q1 and Q2. IC4 is a comparator amplifier that senses zero crossing of a signal. The comparator, therefore, produces a square wave in phase with the reference signal, KV. R3, R4, C2 and C4 form an integrator that provides a 90° phase shift of the signal, which is amplified by IC2. IC3 is a comparator that senses the zero crossing of a signal and produces a square wave 270° out of phase with the reference signal. C3 and C5 are switched in to the circuit when making measurements at 120 Hz.

Error Detectors. The error detectors consist of peak detectors (IC5 and IC8) and buffer amplifiers (IC6 and

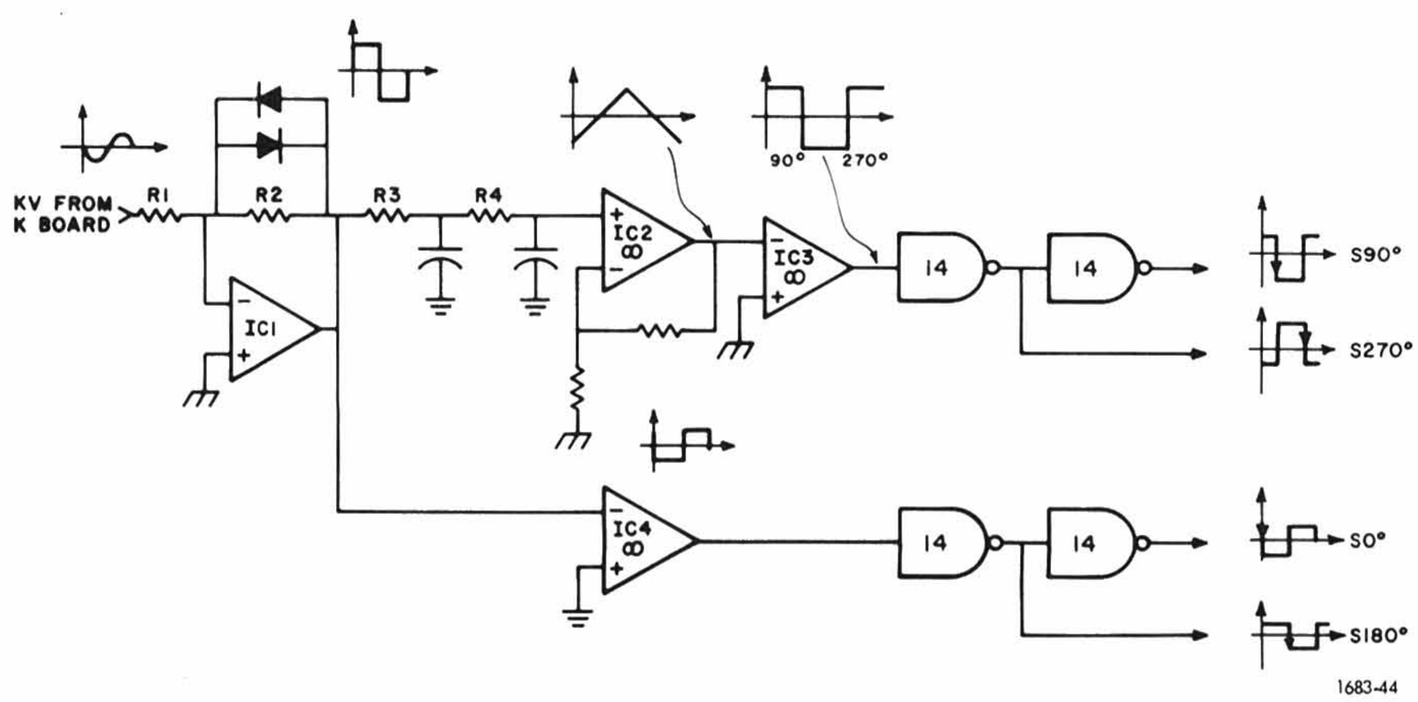

Figure 4-34. Phase-reference circuit.

File Courtesy of GRWiki.org

IC9). Peak detector IC5 and its buffer amplifier, IC6, operate as follows: When the input signal, KV, goes negative, CR6 conducts; therefore, the amplifier has zero gain. As the input goes positive, CR5 conducts, and the gain is proportional to R20/R19. R21, C14, and C15 filter the output signal; the effect is a negative dc level proportional to the positive peak value of KV. IC6 is a buffer. C15 is also switched in for 120-kHz measurements, so that charging time is constant with frequency. The output of the buffer amplifier is given by

$$E_o(dc) = \frac{R20}{R19} \frac{1}{\pi} \left(1 + \frac{R104}{R102}\right) l \text{ KV (peak).}$$

R22 is for adjusting the zero level of amplifier IC5. The output is applied to a comparator circuit which compares this reference level to the bridge error.

The circuit that processes the DE signal operates in the same manner, except the output level is positive. The signal is also proportional to the error voltage, DE. The front-panel SENSITIVITY control allows for reduction of this voltage to overcome noise or other interference. At maximum sensitivity the error is one count or less; less sensitivity can be 8 counts or less, 100 counts or less, etc. The sensitivity can also be programmed externally by programming a resistance between the AUXILIARY socket SENS signal connection and YGL ground connection. Refer to paragraphs 4.4.13 and 3.11 for more information concerning this type of operation.

Comparators. IC7, 10, 11 and 12 are comparators that compare error signal DE and early-error signal DEEE to the reference signal. If the error is less than 500 counts, IC12 produces a "1" output that slows the clock rate. If the error is less than 100 counts, IC11 produces a "1" output that is also applied to the clock circuit to further slow down the clock rate. If the error is less than 8 counts, then IC10 produces a "1" that is inverted and applied to the clock circuit for slowing the rate and to the UNBALANCED lamp, extinguishing the lamp.

Because of low sensitivity on the 2I(R)-side counter when measuring capacitance that is less than full scale, it is necessary to prevent a slower SVCO clock from occurring while the 2I side is still counting. A gate circuit mouned on a small board underneath the mother board* helps to slow the clock when the anticipator signal at the D board and reference signal from the S board are at certain states. A flip-flop in this circuit is set whenever the reference signal and anticipator signal indicate an error of 8 counts. The output of the flip-flop turns on the slowest clock. When the ancicipator level indicates a balanced condition, an amplifier produces an output to the S board that is applied to the output of inverter of IC7 (error 1 count or less comparator), that in addition to IC7, also produces signal SBAL. (See Figure 6-21.) Refer to paragraph 3.10.1 for further information concerning 2I-side counter sensitivity.

*Also refer to note on Figure 6-21.

A slower balance may occur when making a low-capacitance high-loss measurement.

When the error is determined to be one count or less, IC7 produces a "1" that is "ANDED" on the E board with other signals (direction control and change range) to produce signal EBAL that is fed to the P board to produce a bridge-balanced signal that disables the counter clocks and produces a balance start-pulse.

R40-R43 are for adjusting the comparators. SFAST, from comparator IC12, is fed to the anticipator-driver circuit on the P board to indicate that a fast count is in process, preventing an anticipator-function decay signal from occuring immediately after the main gates are inhibited. (Refer to paragraph 4.4.10.)

Clock. Clock signal SVCO is a 5-V, 0.5-μs pulse that produces the PLCK23 and PLCK12 clock signals at the P board that drive the 1I and 2I counters and the range counter on the E board. SVCO is produced by Q11 and Q16 and the output IC gates. The rate of the clock depends on capacitors C24-C27 that are switched in by the comparator outputs when a certain count is detected; the greater the error the faster the clock rate.

Q21, Q14, R64 and R65 form a current source that charges C24-C27 toward −15 V from +15 V. Signal ZS3 acts to cut off Q14 a 120-Hz measurements, reducing the flow of source current to approximately 0.5 mA. At 1 kHz the transistor pair (Q14 and Q21) supplies the current.

The base of Q15 is approximately 6.9 V. As the voltage at the emitter of Q15 drops to approximately 6.3 V due to the capacitor(s) charging toward −15 V, Q15 turns on, turning on Q16. The capacitors then charge toward +15 V through the Q15-Q16-R68 path until the point between R69 and R70 rises from approximately 6.9 V to 12 V, in approximately 0.2 μs, turning off Q15 and Q16 and causing the capacitors to again charge toward −15 V. C29 acts as a differentiator, applying the pulse to the IC gates. As the error decreases, the comparators switch more capacitors into the charging circuit. The time between the charging to +15 V is given by $\Delta T = \frac{C\Delta E}{I}$.

Table 4-6 gives the frequency for 120-Hz and 1-kHz measurements for various error conditions.

4.4.10 Program Board (Figure 6-18 and 6-19).

General. Figures 4-35 and 4-36 show a block diagram of the program board (P board). The program board contains the following circuits:

1. Clock-pulse circuit
2. Variable-measurement-rate generator (PVMR)
3. Direction-control flip-flops
4. Anticipator-driver gates
5. Balance flip-flop
6. No-balance delay
7. Start pulse

File Courtesy of GRWiki.org

8. Anti-bounce switch
9. Counter test-control logic.

From the control oscillator signal (SVCO), the clock pulse circuit produces clock pulse PCLK23 that drives the range counter and main gates on the E board, pulse PCLK12 that drives the range-delay circuitry on the E board and activates the main gates that gate the clock pulses that drive the 1I and 2I counters, and pulse $\overline{\text{PCLK12}}$ that "interrogates" the direction-control flip-flops on the board.

The PVMR generator produces start pulses for a balance operation when the instrument is in the variable measurement or remote modes of operation. The generator will also produce a start pulse for a capacitance measurement after a leakage measurement is completed. When the front-panel switch is set to any TEST position, the SVCO clock input is disabled. The generator then produces clock signals PLCK12, PLCK23, and $\overline{\text{PCLK12}}$, with rates that can be varied by the front-panel VARIABLE MEAS RATE control. Also in this mode, the program circuit produces a "1" $\overline{\text{PRIG}}$ signal that holds the main gates on the E board turned on, allowing the counter clocks to remain on even if the bridge is balanced. This allows testing the range circuitry and counters.

When the mode switch is set to TRACK, the generator is free-running, but the generator signals are not used. In this mode, however, the program circuit also produces a "1" $\overline{\text{PRIG}}$ signal that holds the main gates on the E board turned on, allowing the counter clocks to remain on even if the bridge is balanced.

In the variable-measurement-rate mode of operation, the generator is inhibited during an unbalanced condition and turned on after the bridge has balanced, to produce a start pulse for the next balance. In the test or track modes, the generator is not inhibited during an unbalance condition. Also, if a leakage measurement is being made, the generator will be turned on to produce a start pulse for a capacitance measurement that follows, even if the bridge is in an unbalanced condition.

When measuring leakage current in the variable-measurement or single-measurement modes, the generator is turned on at the beginning of the leakage-current measurement, as described above. The PVMR generator pulse rate is slowed, however, so that sufficient time (up to 10 s) will be allowed before the generator produces a start pulse for a capacitance measurement. (If a leakage-current condition is found to be acceptable before the allotted time, the leakage circuit will produce a signal that initiates a start pulse — not by the PVMR — for a capacitance measurement that follows.)

The generator can be inhibited by an external 0-V INHIBIT signal applied to the DATA-OUTPUT socket (routed via the Q board).

The direction control flip-flops produce the signals (PRR, PIR) that command the 1I and 2I counters to count forward or reverse (Figure 4-36). This is done by applying error signal DO, a "squared" signal, to the flip-flops and then strobing the flip-flops with 0°, 90°, 180°, and 270° reference signals from the S board. $\overline{\text{PCLK12}}$ then "interrogates" the information stored in the flip-flops, to control the direction in which the counters must operate to achieve a balance. These flip-flops also produce signals $\overline{\text{PRG}}$ and $\overline{\text{PIG}}$ that disable or activate the main gates on the E board that pass clock signals to the counters. The anticipator-driver gates produce signals PAB and PAR that cause the output of anticipator generator on the D board to rise, decay, or hold, according to the point at which a balance is close to being achieved; i.e., a balance operation started and bridge not close to balance means a rise (after a time delay after START pushbutton is pressed), balance is being achieved means decay, counting is being done means hold.

When the bridge is balanced and the instrument is not in the track or test modes, the balance flip-flop circuit disables the signal $\overline{\text{PRIG}}$ that activates the main gates on the E board and, therefore, the clock (PCLK12) that drives the counters. The circuit also produces signal PBUSY when the bridge is in an unbalanced condition, to indicate to peripheral equipment that the bridge is attempting a balance. This signal is fed to the Q, N, and J boards. On the J board it keeps bias supplied to the part under test until a balance is achieved. Also, if the bridge is not balanced within 3 s after the last range change, signal $\overline{\text{PABORT}}$ is produced by a time delay circuit (no-balance delay) associated with this flip-flop. This signal is fed to the N board and the DATA-OUTPUT connection to indicate that a "null" has not been achieved. When leakage-current is being measured, the ABORT signal is inhibited by the 'A' output of F-F IC28, which is applied to the time delay circuit.

The start-pulse circuit produces the $\overline{\text{PSTART}}$ pulse that starts the anticipator generator and, hence, the bridge balancing operation. The pulse can be produced five ways:

1. By pressing the START pushbutton switch on the front panel (ZSTART).
2. By an external closure ($\overline{\text{NSING2}}$) to ground applied through front-panel EXT START connector.
3. By a single-measurement pulse ($\overline{\text{NSING}}$) produced by an external electronic closure to ground applied to the applicable pin connection on the AUXILIARY socket or DATA-OUTPUT socket.
4. By the PVMR generator at a delayed time after a previous balance is achieved.
5. From a signal (LNG) from the L board that indicates leakage current is acceptable. (This can occur during the period allotted for a measurement and not necessarily at the end of the period.)

This circuit also produces two signals that start leakage measurements, $\overline{\text{PLEAK}}$ and $\overline{\text{PSTL}}$. It also produces a signal $\overline{\text{PLEAKOFF}}$ that opens relays on the Y board, gates off the oscillator on the T board, enables the leakage amplifier on

File Courtesy of GRWiki.org

Table 4-6
CLOCK FREQUENCY

Condition	f/fo	1 kHz	120 Hz
500 counts < Error	500	500 kHz	60 kHz
100 counts < Error < 500 counts	50	50 kHz	6 kHz
8 counts < Error < 100 counts	5	5 kHz	600 Hz
1 count < Error < 8 counts	0.5	500 Hz	60 Hz

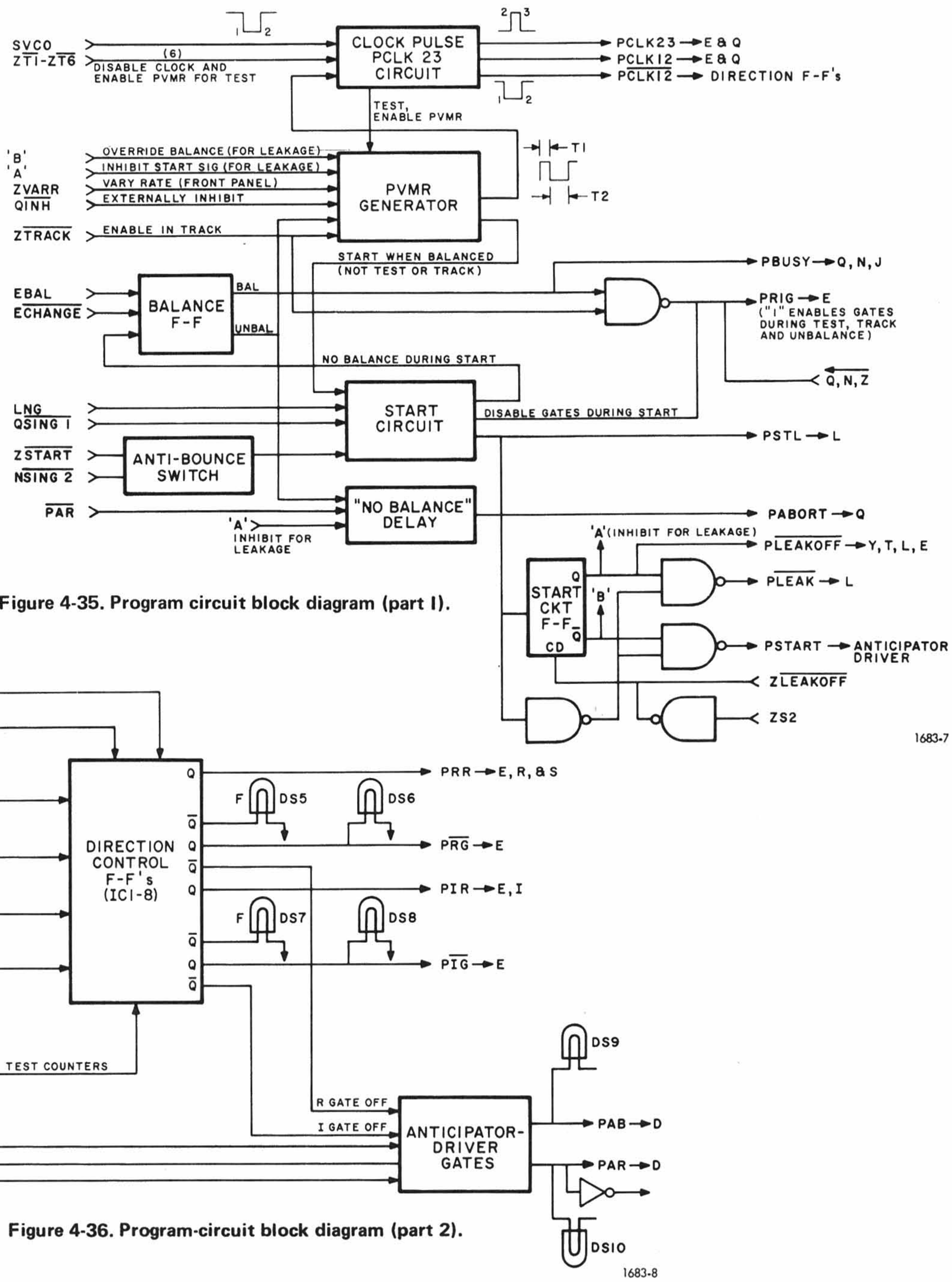

Figure 4-35. Program circuit block diagram (part 1).

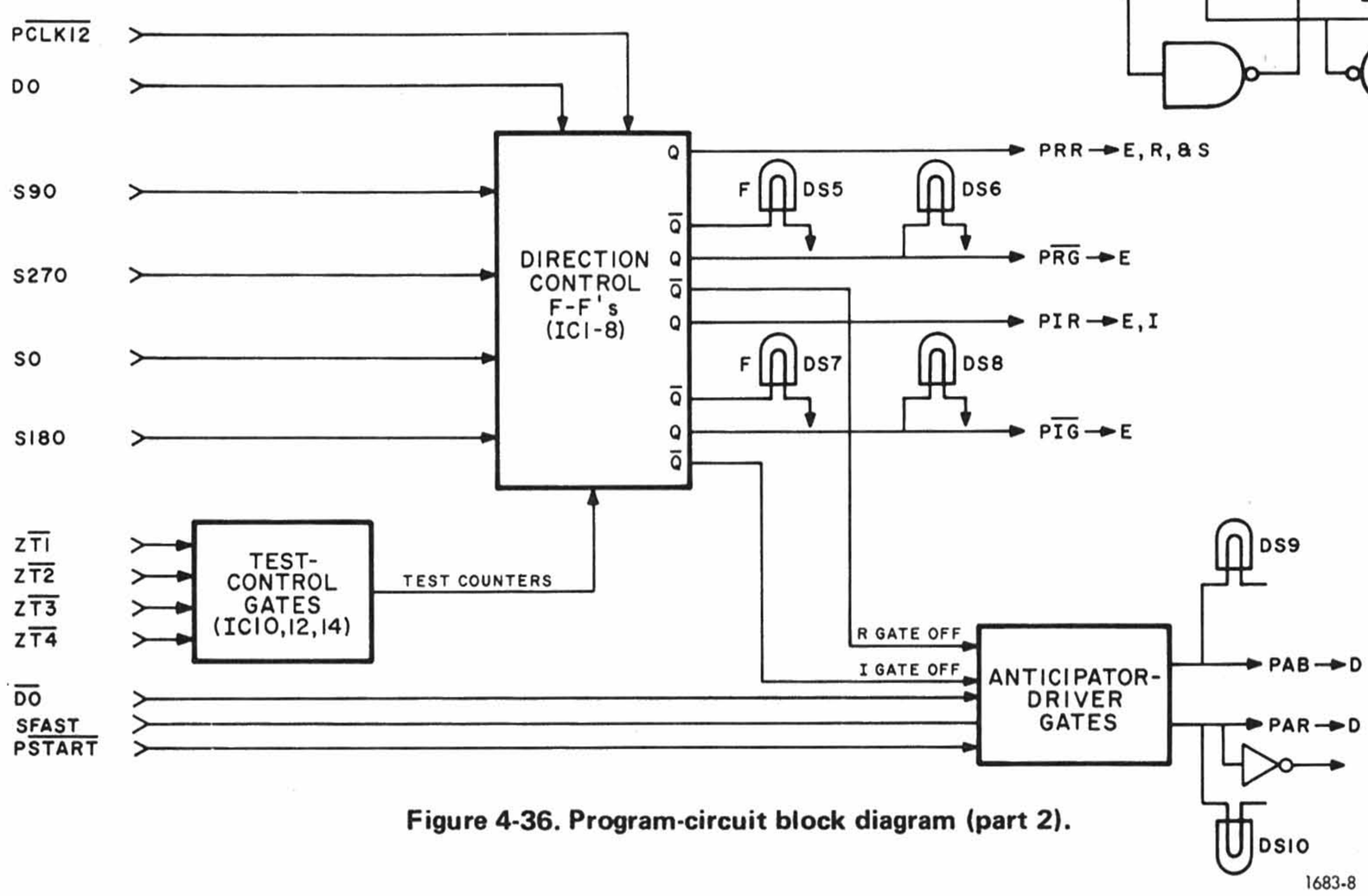

Figure 4-36. Program-circuit block diagram (part 2).

File Courtesy of GRWiki.org

the L board by connecting the amplifier through a relay closure, and disables the main gates on the E board during a leakage-current measurement.

Clock-Pulse Circuit. The clock produces pulses PCLK12 and PCLK23, as shown in Figure 4-35. These pulses are time related; PCLK12 is 1μs, PCLK23 ≈ 340 ns. SVCO, a clock whose rate is proportional to the error signal, drives the clock. If the mode selector is set to any TEST position, a "0" is applied to pin 4 of IC23, which disables the SVCO input. A "1" is applied to pin 12 of IC23, allowing the PVMR generator to drive the clock.

PVMR Generator. The PVMR generator drives the clock when the instrument is in any test mode of operation. In the track mode the PVMR operates continuously.

If Q8 and Q21 are turned off, the generator will start to operate. This occurs when in the test or track modes of operation and when a $\overline{\text{QINH}}$ signal ("0") from an external source is ***not*** applied to the instrument, when the instrument in any other mode of operation and the bridge has been balanced, or when a leakage-current measurements is being made in the variable measurement rate mode.

Initially, the junction between C1 and C2 is at +10 V. This is applied to the base of Q5,turning it on because Q4 is off, +6.66 V being applied to its base. Since Q4 is off, Q3 and Q6 are off. Q7 is therefore off, and the +5 V at its collector is inverted, producing a "0" level PVMR signal. The signal at the junction of C1 and C2 charges in the negative direction through R7 and the front-panel VARIABLE MEAS RATE potentiometer towards −15 V. The discharge time is determined by these resistors and C1 and C2. C1 is switched in when a leakage-current measurement is being made (see input 'A' from flip-flop IC28 in the start-pulse circuit).

This slows the generator, producing an output pulse that can be varied according to the periods listed in Table 4-7. When the capacitor(s) discharges to approximately 0 V, Q5 is turned off and Q4 turns on, turning on Q3 and Q6. Q6 turns on Q7, producing a "1" at the pin-10 output of IC10. C1 and C2 charge up toward +15 V through the path comprised of R8, CR4, Q3, R49, and R13. When Q3 is turned on, 10 V is applied to the base of Q4, holding it on. When the junction of C1 and C2 reaches +10 V, Q5 turns on, turning off Q4, Q3 and Q6. The cycle then repeats. Table 4-7 lists the charging (T2) and discharging (T1) times for various conditions.

As mentioned above, Q8 and Q21 activate or disable the PVMR generator. The generator is activated when a "0" is applied to the bases of Q8 and Q21, turning them off. This occurs when the mode selector is set to any TEST position, or to the TRACK position, and a "0" $\overline{\text{QINH}}$ signal from an external source is not present, or when a leakage-current measurement is being made in the single-measurement mode, or when the instrument has reached a balanced condition in the VMR mode. In the VMR mode of operation the PVMR generator is shut off until a balanced condition is obtained, after which Q8 is turned off by the balance circuit F-F, and the PVMR generator starts running to produce a signal $\overline{\text{PSTART}}$ (provided that an inhibiting $\overline{\text{QINH}}$ signal is not applied to pin 10 of IC25). If a leakage-current measurement is to be made in this mode, however, a "1" input at pin 5 of IC30 from the Q side of IC28 will allow the PVMR generator to operate during a leakage measurement, overriding any unbalanced condition that would turn off the generator.

In the variable measurement mode of operation, a "0" ZVAR signal is applied to pin 5 of gate IC26, producing a "1" that gates on the PVMR generator output to produce a start pulse, indicating the start of a balance.

If a leakage-current measurement is being made, however, the 'A' input ("0") also allows a start pulse generated by the PVMR in the single measurement mode to be gated out for a capacitance measurement, after the leakage measurement has been made.

Start Circuit. The start circuit is activated by the negative-going edge of an input pulse applied to any input of IC27. This occurs under any of the five following conditions:

1. PVMR pulse goes to "1" and gate IC25 is enabled during the variable measurement mode, and a leakage-current measurement is not in process.
2. The external single measurement electronic start signal $\overline{\text{QSING1}}$ goes to "0".
3. The front-panel START switch is pressed, producing a "0" $\overline{\text{ZSTART}}$ signal that in turn produces a "0" output from the anti-bounce switch when $\overline{\text{ZSTART}}$ returns to "1".
4. A "0" external $\overline{\text{NSING2}}$ signal is produced at the front-panel EXT START jack, or a closure to ground is produced at pin 49 of the DATA-OUTPUT socket, which in turn produces a "0" output at the anti-bounce switch when $\overline{\text{NSING2}}$ returns to "1".
5. A negative-going LNG signal from the L board, producing a start pulse for a capacitance measurement

Table 4-7
PVMR GENERATOR RATES

T1	T2	VARIABLE MEAS. RATE Sw.
5 ms	2 ms	FAST
15 ms	1.5 s	SLOW
60 ms	20 ms	FAST*
200 ms	12 s	SLOW*

*Leakage-current measurement

File Courtesy of GRWiki.org

after an acceptable leakage-current condition has been found before the full time allotted for a leakage-current measurement.

The inputs to IC27 from the anti-bounce switch circuit and the PVMR generator are differentiated, going from approximately +4 V to 9 V on a "1" input and from approximately +4 V to 0 V on at a "0" input. When a "0" appears at any of the inputs to IC27, the resultant "1" output is inverted and clears the balance flip-flop to the "unbalanced" state, producing signal PRIG that enables the main gates on the E board and disables the PVMR generator. Signal $\overline{\text{PSTL}}$ is also produced to start a leakage measurement, if the instrument is measuring leakage current. If the instrument is in this mode of operation, $\overline{\text{ZLEAKOFF}}$ and ZS2 will allow flip-flop IC28 to be set, producing a $\overline{\text{PLEAK}}$ signal that is fed to the L board to start the leakage circuits. It will also produce $\overline{\text{PLEAKOFF}}$ that does the following:

1. Opens relays on Y board, disabling the current divider network.
2. Gates off the oscillator on T board.
3. Enables the leakage-current amplifier on the L board by connecting it through a relay closure to the capacitor under test.
4. Disables main gates on the E board.
5. Disables various circuits on the P board via the flip-flop 'B' output, described previously in this paragraph.
6. Indicates to external recording equipment that a leakage-current measurement is being made.

The duration of the start pulse (15 ms) is determined by the timing circuit comprised of C9 and R29. A negative-going LNG signal indicates an acceptable leakage measurement has been completed and produces a start pulse for a capacitance measurement. If a "no-go" leakage-current condition exists, the start pulse will be produced by the PVMR generator after a delay. $\overline{\text{PSTART}}$ is produced any time a start signal is produced except during a leakage-current measurement, in which case the AND gate (IC 24) that produces the pulse is disabled. The pulse is fed to the anticipator-driver circuit, which activates the anticipator on the D board, and to the small board on the bottom of the mother board, to reset the flip-flop on that board. Note that $\overline{\text{PLEAK}}$ and $\overline{\text{PSTART}}$ are gated on according to the start of flip-flop IC28, the state of which determines if a leakage measurement is to be made.

Anti-Bounce Switch. The anti-bounce switch produces a signal that overrides the "0" $\overline{\text{ZSTART}}$ or $\overline{\text{NSING2}}$ "0" level signal by 70 ms to eliminate the signal bouncing that is produced by noisy contact closures. If not eliminated, this unstable condition may cause erratic gating of signals. When both inputs are "1", Q15 is turned on. The collector of Q15 is then 0 V. C11 is then charged toward +15 V through R40. Current through R39 will turn on Q13, holding Q14 off. When an input goes to "0", Q15 is turned off, turning off Q13, which turns off Q14. The duration of the output pulse is determined by the time required to charge C11 back to 0 V at the base of Q13.

Balance F-F. The balance flip-flop is set by the start pulse produced by the start circuit and is reset to the balance state when $\overline{\text{ECHANGE}}$, EBAL, and no-start-pulse-is-being-produced are present at its input gates (IC27). $\overline{\text{ECHANGE}}$ indicates a change or possible change of range is necessary. When "0" during a range change, it prevents EBAL from resetting the flip-flop. EBAL is "0" until a balance is achieved and no possible range change can occur. Then it goes to "1", resetting the flip-flop. When set to the "balanced" state, the flip-flop enables the PVMR generator, so that it produces a pulse that in turn produces a start pulse for another balance operation. The flip-flop also disables the main gates on the E board by disabling signal PRIG, causing it to go to "0". If the flip-flop is not cleared within 3.0 s after the last range change, the "no-balance" delay circuit produces signal PABORT, which is used to indicate to peripheral equipment that a balance has not occurred within the allotted time. The flip-flop is set to the "unbalanced" state by the start pulse.

Direction Control F-F's. The error signal, DO, is a squared signal developed on the D board from the bridge error signal. The phase reference signals from the S board, S0°, S90°, S180°, and S270°, are negative-going signals at the particular phase-reference time and are applied to flip-flops IC1 through IC4, together with error signal DO. The flip-flops are clock-type flip-flops that change state on the negative-going edge of the "T" input pulse (phase-reference signals), if the applicable side is enabled by a logical "1". Note that in the schematic the Q outputs of flip-flops 1 through 4 are labeled GR, GF, CR and CF respectively. The reference signals strobe the flip-flops, which store the direction information. Table 4-8 lists the state of the flip-flops for each condition. The signal DO logic level listed is the level at the input to the P board.

Table 4-8
PHASE-DETECTOR F-F's

GR(IC1) is:	"0" if DO is "1" @ 90° "1" if DO is "0" @ 90°
GF(IC2) is:	"0" if DO is "1" @ 270° "1" if DO is "0" @ 270°
CR(IC3) is:	"0" if DO is "1" @ 0° "1" if DO is "0" @ 0°
CF(IC4) is:	"0" if DO is "1" @ 180° "1" if DO is "0" @ 180°

File Courtesy of GRWiki.org

Table 4-9
F-F AND COUNTER TEST

TEST Sw. Position	DS5	DS6	DS7	DS8
1 1I Counter	—	OFF Disable 2I	ON (F)	ON Enable 1I
2 Check	OFF	OFF Counter	OFF (R)	ON Counter
3 2I Counter	ON (F)	ON Enable 2I	—	OFF Disable 1I
4 Check	OFF (R)	ON Counter	OFF	OFF Counter

Therefore, if DO is a negative cosine, this implies a high α, or reactance, error and the 1I counter should count reverse; if DO is a positive cosine, a low α error, and the 1I counter should count forward. If DO is a negative sine wave, this implies a high β, or resistance, error and the 2I counter should reverse; a positive cosine, implies a low β error and the counter should count forward. A DO "1" level at 90° is a positive sine wave, at 270° a negative sine wave, at 0° a positive cosine wave, and at 180° a negative cosine wave.

The functions to be produced by the next set of flip-flops in the direction circuitry, IC5 through IC8, are forward, reverse, and stop the 1I and/or 2I clocks. (Refer to the table in Figure 6-19.)

Flip-flops IC5 through IC8 are strobed by PCLK12, which is not synchronized with the bridge. Since these are clock-type flip-flops, the negative-going edge of PCLK12 causes the flip-flop(s) to go to the state that is enabled by a "1" at all its gate inputs (S or C). When the instrument is not in the test mode of operation, the flip-flop S and C gate inputs from the Z board ($Z\overline{T1} - Z\overline{T4}$) are "1", i.e., the SD and CD inputs are "1". Therefore, the flip-flops are activated by the inputs from flip-flops IC1 through IC4 and by PCLK12 in the non-test mode of operation. PRR is "1" if GR is "1" when PCLK12 occurs (count reverse) and "0" if GR is "0" at this time. PIR is "1" if CR is "1" when PCLK12 occurs (count reverse) and "0" if CR is "0" at this time. $P\overline{RG}$ is "0" (2I main gate disabled) if GR = GF, and $P\overline{IG}$ is "0" (1I main gate disabled) if CR = CF. Signals PIR and PRR can also be supplied to external equipment via the auxiliary board (Q) for driving the equipment.

Note that the indicator lamps DS1 – DS4 connected to flip-flops IC1-4 light when the flip-flops are in the set state, producing a "1" output at the Q side. Also note that indicators DS5 and DS7, connected to flip-flops IC5 and 7, respectively, light when the flip-flops are in the clear state, indicating a forward count. DS6 and DS8 will be lit when the respective (2I and 1I) flip-flops are set, supplying enabling signals to the clock main gates on the E board. These flip-flops (IC5-8) can be checked by the test mode of operation. Table 4-9 gives the state of the flip-flop lamps for each applicable test position of the front-panel mode switch. The "F" and "R" letters indicate a forward- or reverse-count signal.

This test exercises the 1I and 2I counters, decoders, and displays by causing the counters to count forward and reverse if the instrument is operating properly. The range counter on the E board will also change ranges during the test mode.

Anticipator-Driver Gates. Two signals are produced by this circuit to drive the anticipator generator, PAB and PAR. The anticipator output is the signal that the error signal is compared with. The combinations of the PAB and PAR signals, when applied to the anticipator generator, produce three conditions; (1) a rising signal, (2) a decaying signal, and (3) a holding signal. (Refer to Figure 4-26.) Note that when a balance is obtained and the 1I and 2I main gates are disabled by flip-flops IC6 and IC8, a "1" stop signal is produced at pin 10 of IC15 and pin 13 of IC9. If the instrument is counting at a very fast rate, the SFAST signal from the "error < 500 counts" comparator on the S board prevents a decay signal from occurring immediately after the main gates are inhibited. This prevents a transient from causing a delay. A decaying signal will be initiated when the output of IC15(3), "stop counters", is "1" and

Table 4-10
ANTICIPATOR-DRIVING SIGNALS

Sequence	PAB	PAR	PSTART	STOP
Rise	0	1	1	0
Decay	1	0	1	1
Hold	0	0	1	0

File Courtesy of GRWiki.org

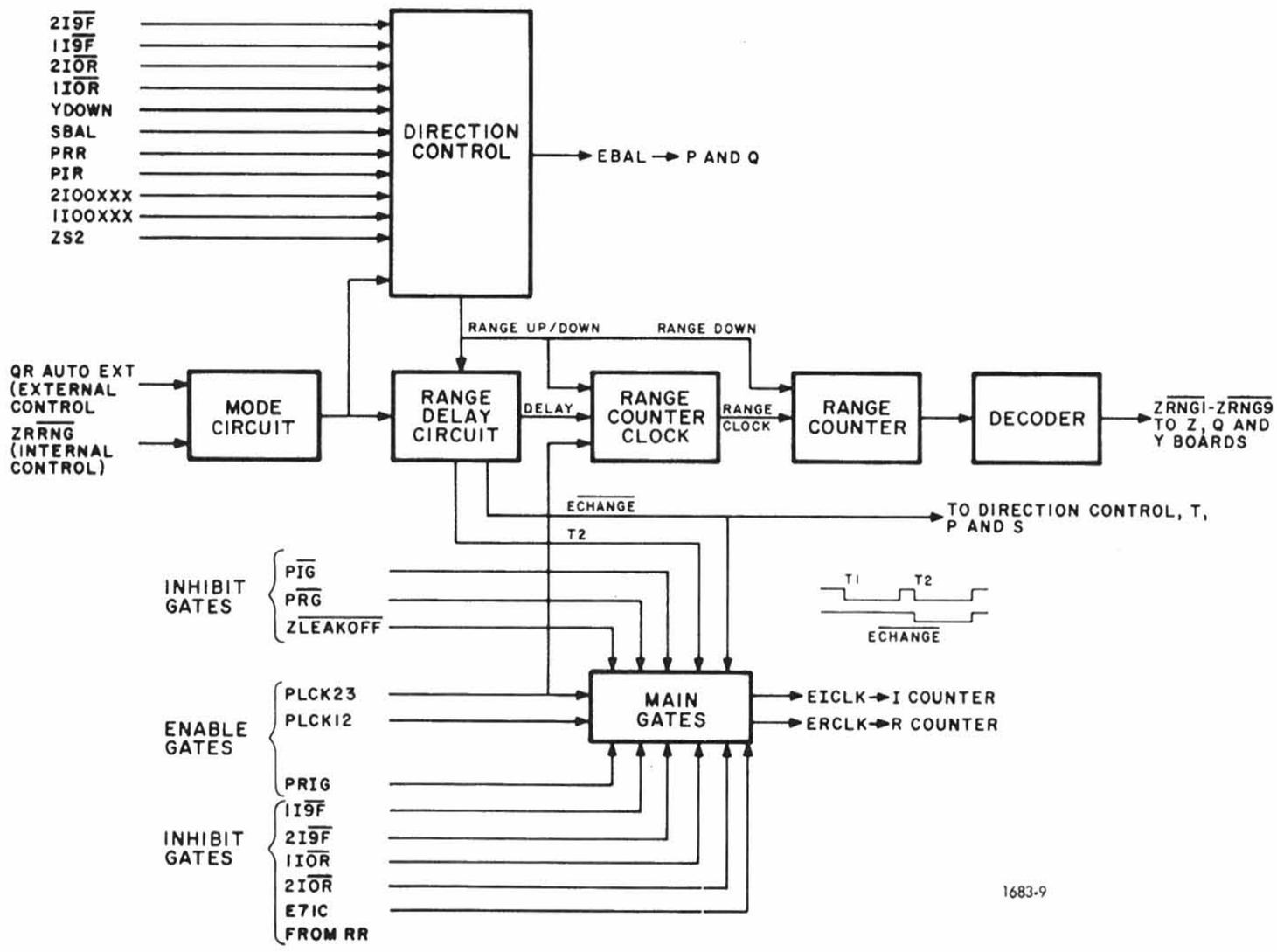

Figure 4-37. Range circuit block diagram.

either SFAST is "0" or "stop" counters has been a "1" for 8 ms (determined by the time delay comprised of Q16 and Q17 and associated parts).

Table 4-10 lists the conditions under which decay (PAB), rise (PAR), and hold signals will be produced. The STOP signals listed are the output of IC9(11). This is not the "start" signal mentioned above but is derived from it.

Note that DS9 lights when PAB is "1" and DS10 lights when PAR is "1".

Counter Test Control Logic. This circuit controls the state of the direction control flip-flop to exercise the counter circuits in the instrument. This circuitry was described earlier in this paragraph.

4.4.11 Range Board (Figure 6-8).

General. The range board (E board) contains the circuitry that produces signals that switch in applicable range resistors on the Y board when a change of range is necessary; changes the front-panel range and decimal point indicators (via the Z board); provides a time delay for the change of range signals, giving the circuits a chance to "settle down"; and provides a signal to the front-panel RANGE indicator that causes the indicator to light, indicating that a change of range may be necessary.

These functions occur when the instrument is set to the automatic (AUTO) or automatic-remote modes of operation. The circuit also contains the main-gate circuit that gates clock pulses to the 1I and 2I counters. This circuit functions during all modes of operation, except during certain conditions in which the gates will be inhibited. Figure 4-37 shows a block diagram of the range circuit. The range circuit consists of the following circuits:

1. Mode
2. Range delay
3. Range-counter clock
4. Direction control
5. Range counter and decoder.

The mode circuit activates the range counter when the front-panel RANGE control is set to AUTO, or when it is set to REMOTE and a 0-V QRAUTOEXT signal is applied to the appropriate pin connection on the AUXILIARY socket. The 0-V QRAUTOEXT signal overrides the remote mode of operation, disabling the gates on the Q board that gate in external range signals ($R\overline{NG1}$-$R\overline{NG9}$) and allowing the 1683 range counter to operate; in remote range operation, the range counter is normally disabled, the range being determined by external signals applied to the 1683.

The direction control circuit has circuits for three functions: (1) down-range counting, (2) up-range counting, and (3) automatic ranging.

When the range circuit is enabled, the automatic ranging circuit activates the down-range counting circuit when the range counter is providing a range indication from range 2 to 9. The up-range counting circuit is activated when the range circuit range counter is providing a range indication from range 1 to 8.

The range counter is similar to the type used for the 1I and 2I counters. It is a reversible, four-stage 1-2-4-8 decade counter that feeds a decoder that converts to nine lines

File Courtesy of GRWiki.org

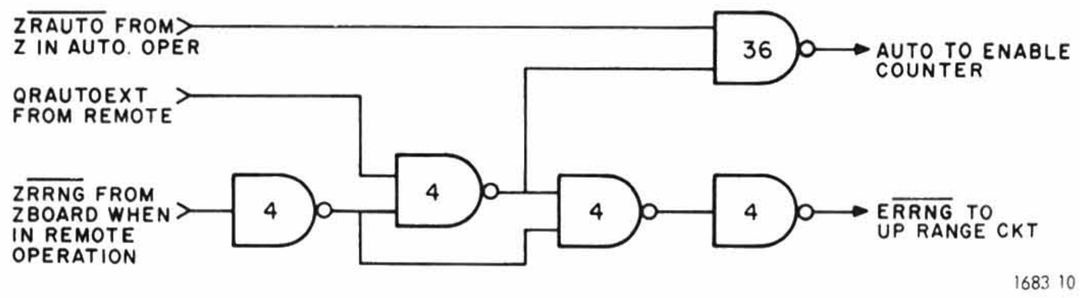

Figure 4-38. Mode circuit.

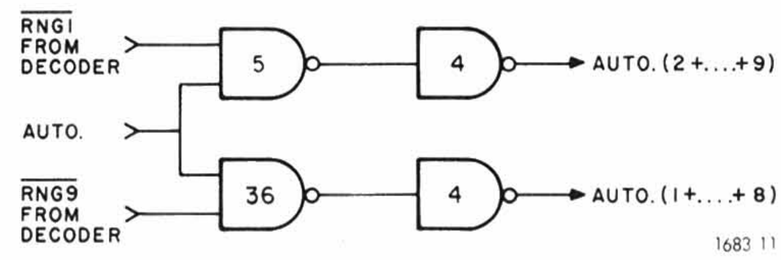

Figure 4-39. Auto-ranging circuit.

corresponding to ranges 1-9. The counter is connected in such a manner that a zero and a 10 to 15 count are not allowed. The decoder outputs are sent to the Z board for driving appropriate displays on the H board, to the data-output board (N board) for driving peripheral equipment, and to the Y board for changing the range of the bridge.

Mode Circuit. Figure 4-38 shows the mode circuit. The output of IC36, AUTO, is a "1" when the front-panel RANGE switch is set to AUTO, or when the switch is set to REMOTE and a 0-V QRAUTOEXT signal from an external source is applied to the appropriate pin connection on the AUXILIARY socket. The AUTO "1" signal enables the range counter decoders, allowing the range signals to be fed to the other circuits.

$\overline{\text{ERRNG}}$ (disengage remote hold range) is "0" if the instrument is in the remote mode and a QRAUTOEXT 0-V signal is applied externally to the instrument. The "0" disables the gates on the Q board that allow external range signals to drive the 1683 circuits and displays. This will allow the overriding of the remote operation and disengaging of any remotely produced "hold" range, since the gates on the Q board are disabled and the E board range counter is enabled by a resultant "1" AUTO signal that occurs under these conditions.

Auto-Ranging Circuit. This circuit is part of the direction-control circuit. Figure 4-39 shows the auto-ranging circuit. The AUTO signal produced by the limits circuit also enables the autoranging circuit, allowing the range circuit to range automatically. If the counter is not in range one, the output of the range-one decoder of the range counter is "1", producing a "0" that is inverted to produce the AUTO (1+ . . . . . +8) signal. If the counter is not in range nine, the output of the range-nine decoder is "1", producing a "0" that is inverted to produce the AUTO (2+ . . . . . +9) signal. These signals are applied to the up-range and down-range circuits, respectively, to command the counter to count up or down.

Up-Range—Down-Range. Figure 4-40 shows the up-range and down-range circuits. These circuits are also part of the

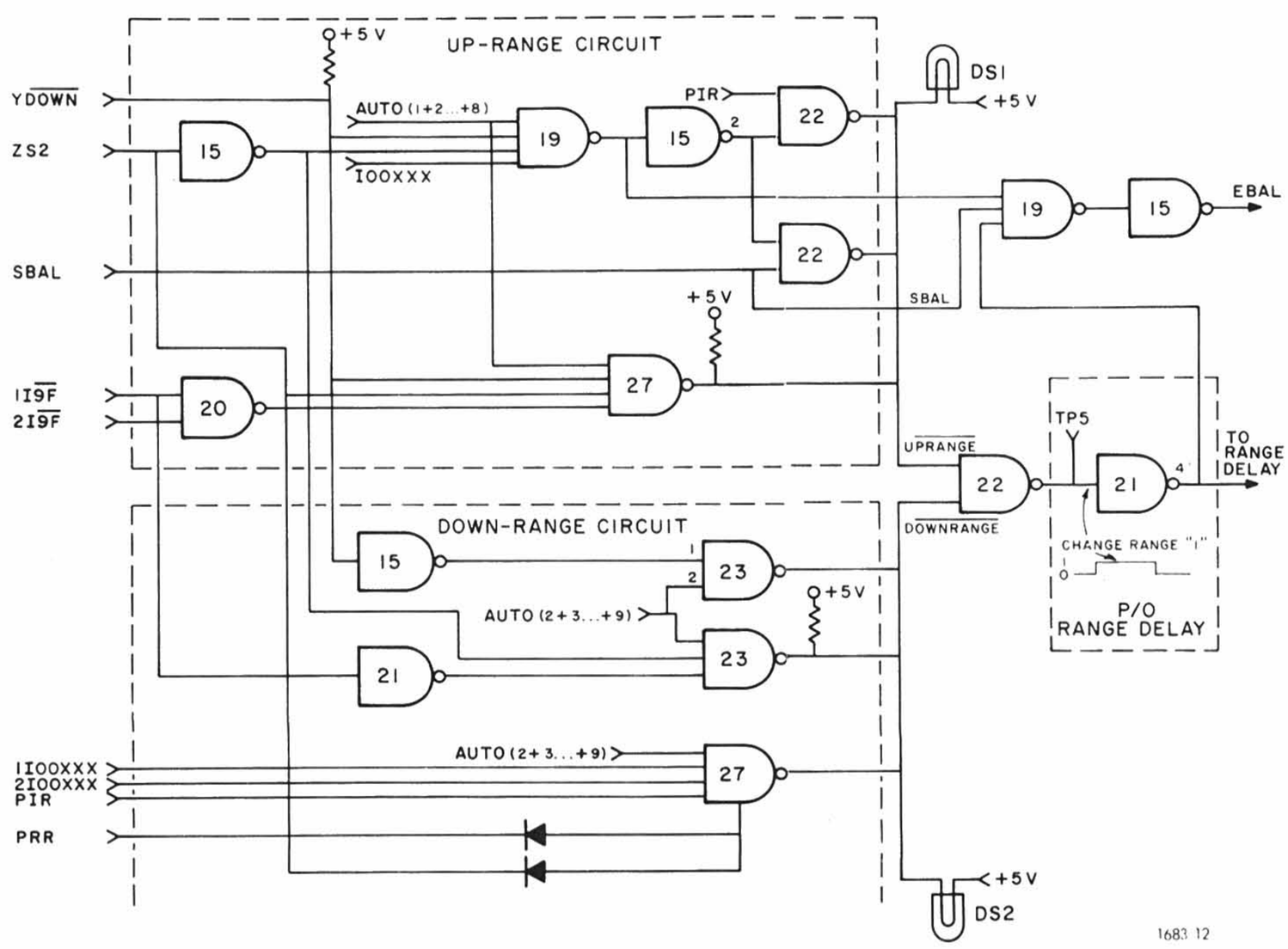

Figure 4-40. Up-range and down-range circuits.

File Courtesy of GRWiki.org

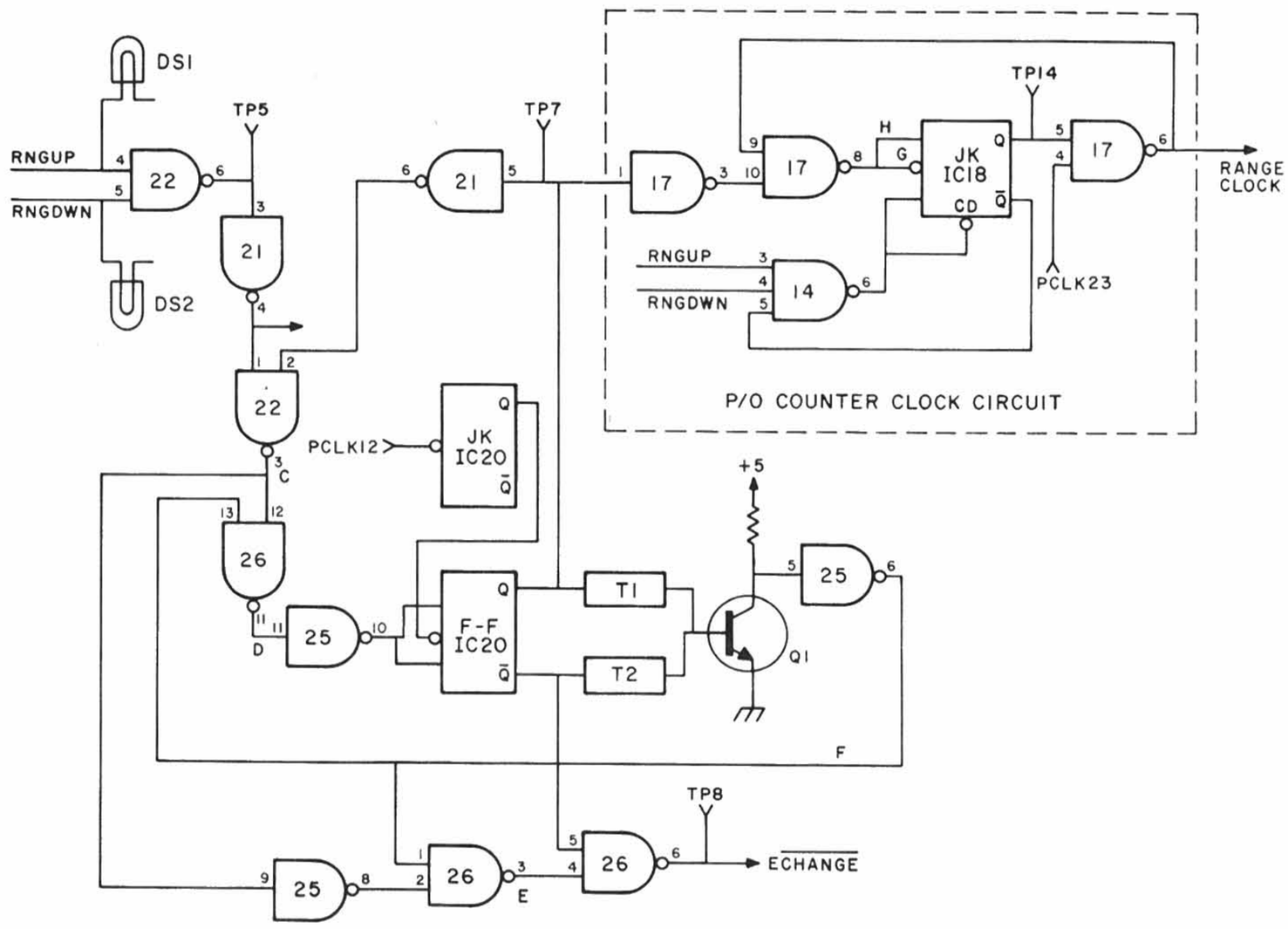

Figure 4-41. Range delay circuit.

direction control circuitry. The range circuit will be commanded to count forward when there is a 119999F (119$\overline{F}$) or 219999•F (219$\overline{F}$) signal from the counters, an auto ranging (AUTO 1-8) signal, inductance measurement being made (ZS2), and the current-to-voltage amplifier on the Y board is not saturated (Y$\overline{DOWN}$). This will produce a "1" level at TP5, indicating a change or possible change of range is required (refer to paragraph 4.4.11). Also, if there is a 100XXX•R signal, capacitance measurement being made (Z$\overline{S2}$), not Y down (Y$\overline{DOWN}$), AUTO 1-8, and a reverse capacitance count is indicated (PIR), this condition indicates the resolution for a capacitance reading is too low, and the range counter should range upward. If a balance indication (SBAL) occurs during any of these phases, a balance condition will not occur; a balance, therefore, is prevented during any ranging or possible ranging operation.

A down command will be produced by the down range circuit by a "0" Y$\overline{DOWN}$ and AUTO 2-9. Y$\overline{DOWN}$ also inhibits the up command. A down command is also produced when 1100XXX, 2100XX, inductance being measured (ZS2), and AUTO 2-9 are all present; or when 119999•F, capacitance is measured (Z$\overline{S2}$), and AUTO 2-9 are all present.

Note that a balance signal (EBAL), which is fed to the program (P) board, will not occur during any change of range or possible change of range. It will only occur when SBAL; the output of IC19, pin 6; and output of IC21, pin 4 (a "1" when no range change is indicated), are all "1". EBAL with E$\overline{CHANGE}$ sets the balance flip-flop on the P board, inhibiting certain circuits when a balance is obtained (paragraph 4.4.10).

Indicator lamps DS1 and DS2 will light when a change or possible change of range may occur; DS1 for an up-range, DS2 for a down-range change.

The U$\overline{PRANGE}$ signal is also used to enable or disenable the appropriate wired OR gates of the range counter, to allow the counter to count up or down.

Range Delay. Figure 4-41 shows a diagram of the range-delay circuit. Timing diagrams, Figures 4-42 to 4-44, illustrate three different timing conditions so that operation can be understood: (1) when a change of range is required on all ranges (TP5 is always a "1"); (2) when there is one change of range and another might be necessary — the first timing period is completed and the second period is started, and the bridge indicates that a change of range might be necessary (TP5 is a "1" during a portion of the second time period, T2); and (3) a change of range is indicated but the bridge decides not to change range (TP5 goes to "0" during time period T1).

The operation of this circuit can best be described by looking at Figure 4-41 and the timing diagrams (Figure 4-42 to 4-44) for each of the above described conditions. The circuit must look at the signal at TP5 and determine if a range change is in order. If one is, a RANGE CLOCK pulse that commands the range counter to change one count will be produced at pin 6 of IC17. Also, signal E$\overline{CHANGE}$ will be produced to inhibit the oscillator (first 5 ms) and the main gates (25 ms) during the range or possible range change and to reset the balance flip-flop on the P board to prevent any possible balance condition from occurring during this time.

File Courtesy of GRWiki.org

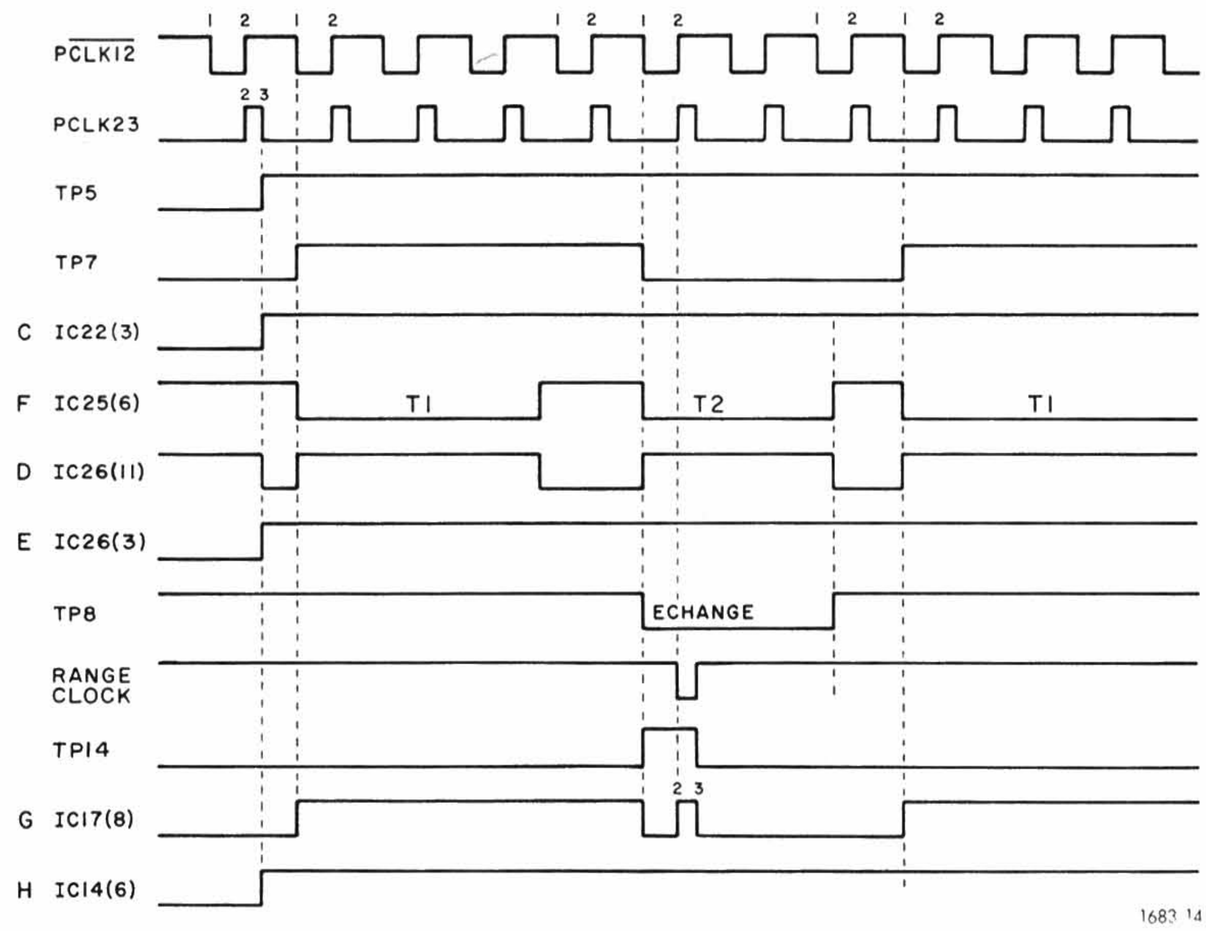

Figure 4-42. Timing diagram, change range on all ranges.

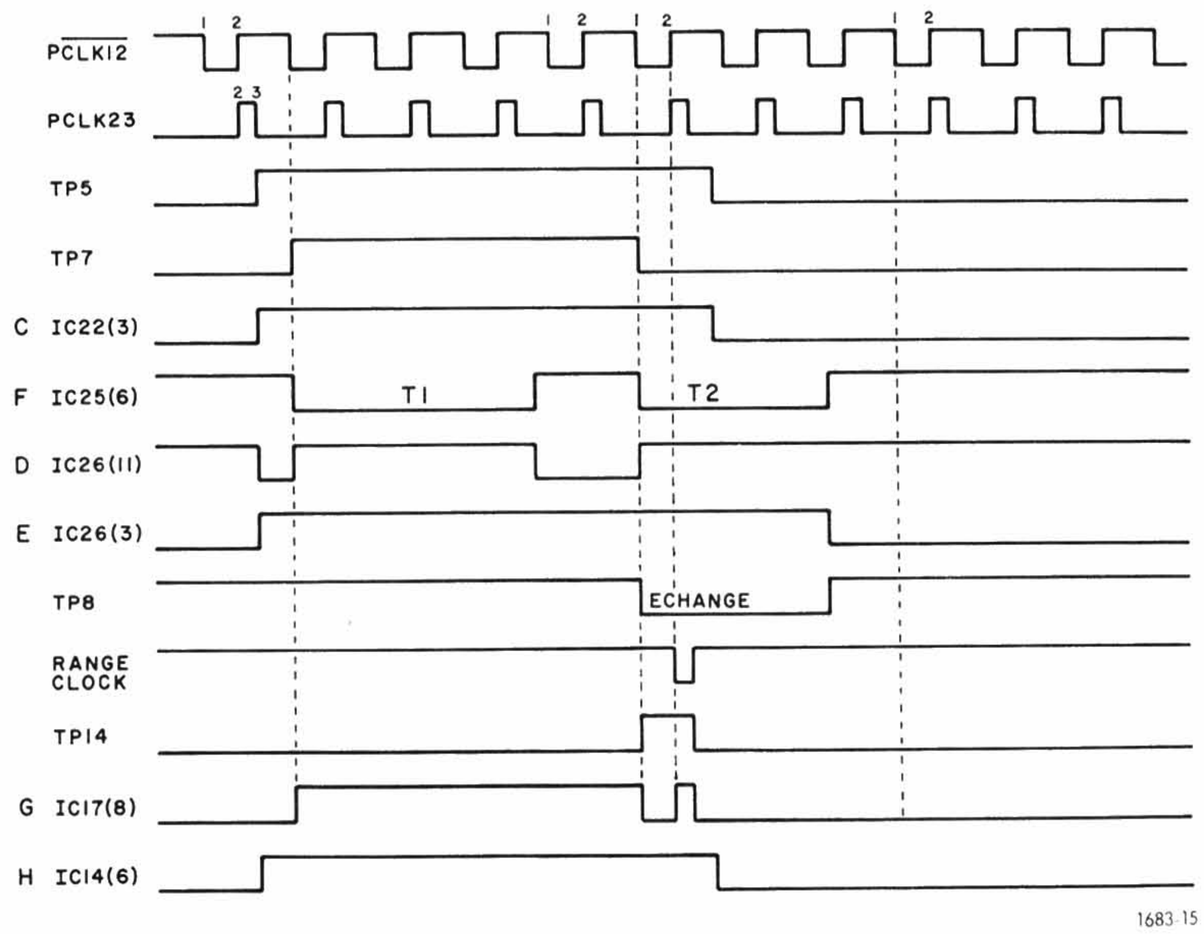

Figure 4-43. Timing diagram, change one range and possibly next range.

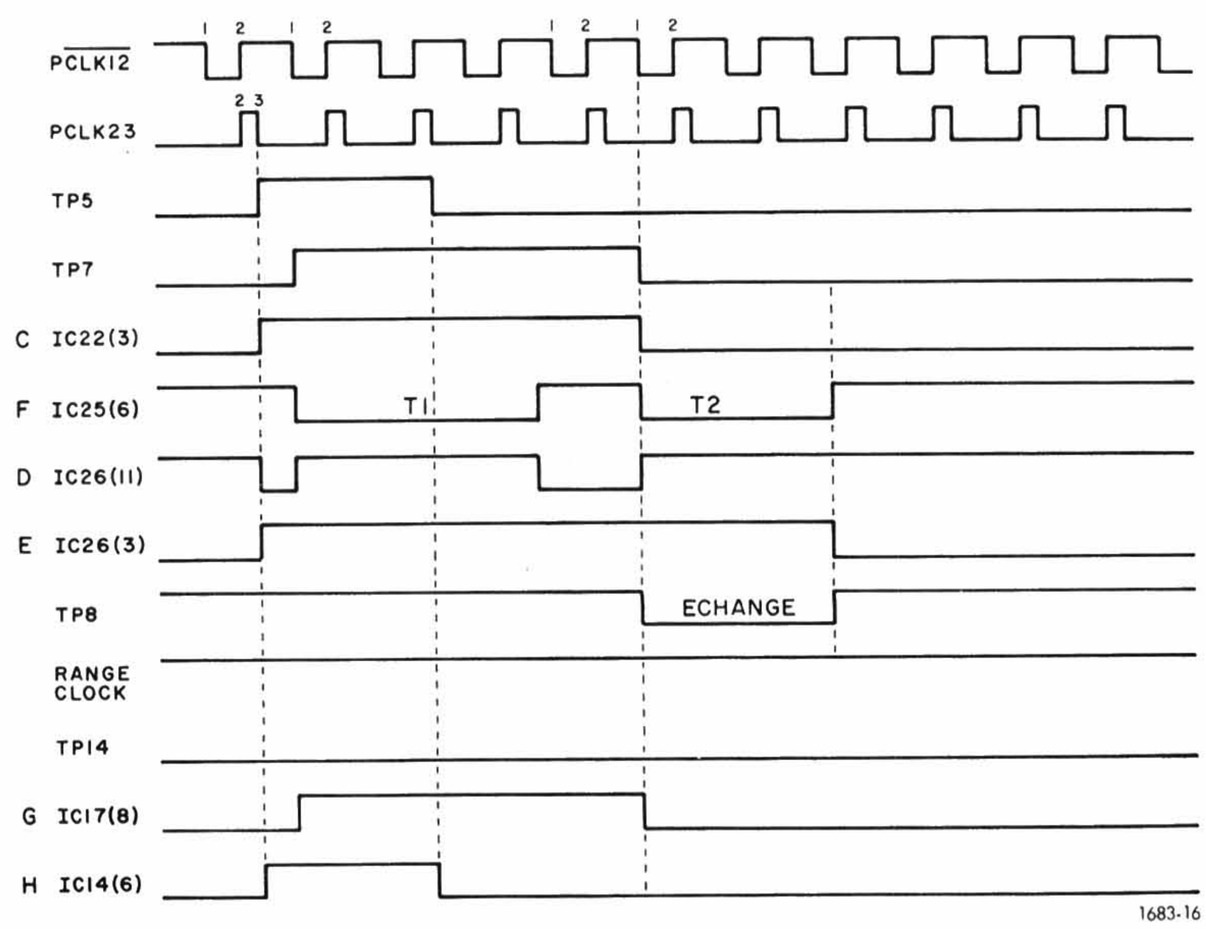

Figure 4-44. Timing diagram, start range change then stop change.

File Courtesy of GRWiki.org

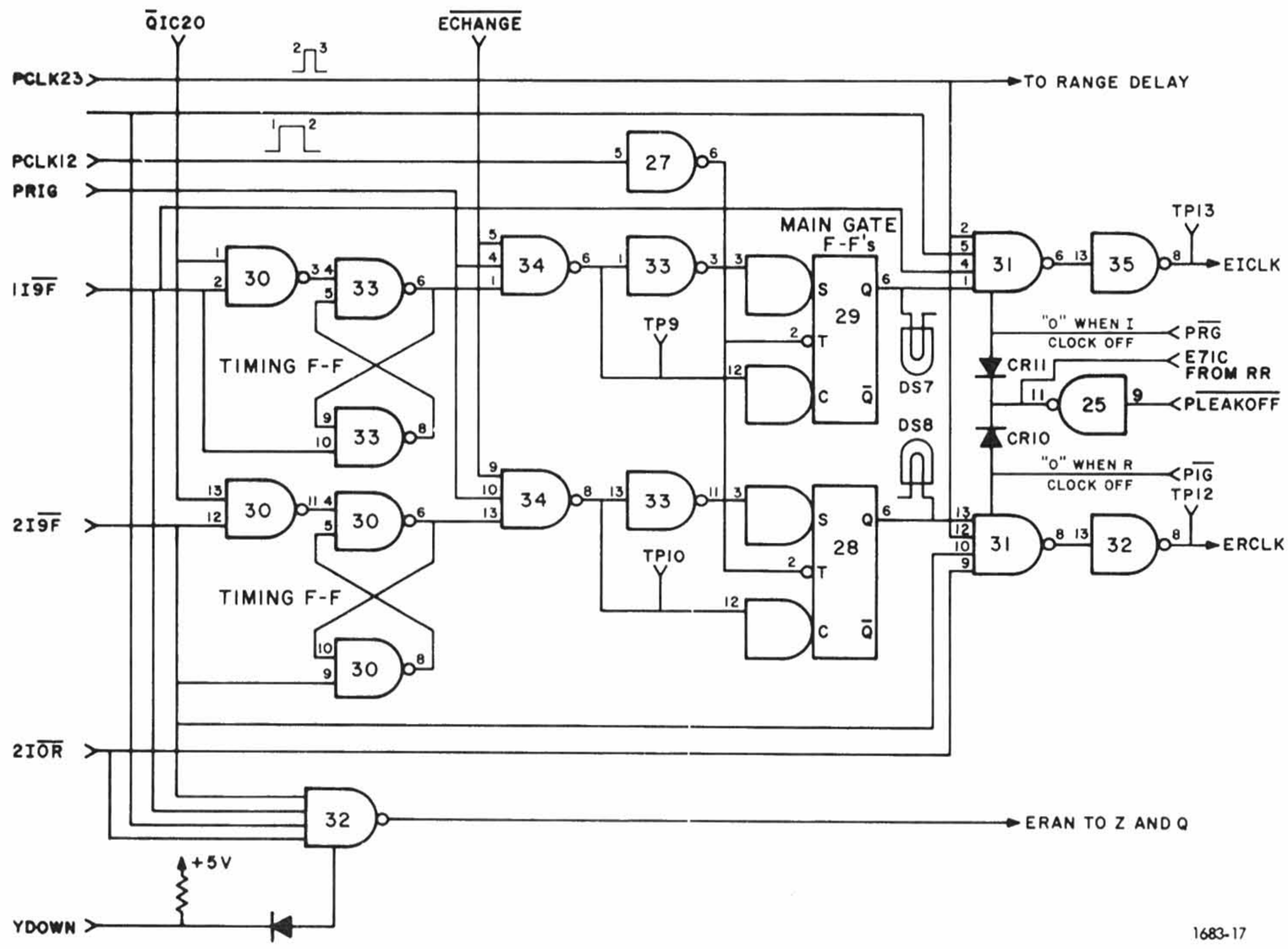

Figure 4-45. Main gates.

Essentially what happens in the delay circuit is that when TP5 goes to "1", the set and clear gates of flip-flop IC20 are enabled, since the pin-6 output of IC25 is initially a "1". The flip-flop is then set by the negative-going edge of PCLK12, causing the output of IC25(6) to go to "0" and disable the gates of the flip-flop. Note that PCLK12 is frequency-divided by JK IC20 before being applied to flip-flop IC20, and, therefore, the switching action of flip-flop IC20 is one-half that of the pulse rate of PCLK12, shown in Figures 4-42 to 4-44. (The switching of IC20 occurs on the second PLCK12 pulse.)

At the end of time T1, determined by time delay T1, the Q output of IC20 passes through the delay, turns on Q1 and produces a "1" at IC25(6), enabling the gates again. Even if TP5 did not stay a "1" for this length of time, as shown in Figure 4-44, the gates will still be enabled, since TP7 is now "1" because of the set condition of the flip-flop, which allows the flip-flop gates to be enabled by IC25(6). PCLK12 then resets the flip-flop, causing IC25(6) to go to "0". TP7 then goes to "0". After time T2, determined by time delay T2, Q1 is turned on by the $\overline{Q}$ side of IC20, causing IC25(6) to go to "1". This action produces signal $\overline{\text{ECHANGE}}$, a 25-ms "0" level.

The RANGE CLOCK signal is produced if a range-up or range-down "0" signal at gate IC14 remains "0" for the time it takes TP7 to go "0", or time T1, causing the clock input (point G, Figure 4-41) of JK flip-flop IC18 to go to "0", setting flip-flop IC18. This enables gate IC17 for pulse PCLK23, which produces the clock pulse.

Since the level at TP7 represents time T1, an up-range or down-range signal that remains at gate IC14 for this time indicates a definite change of range. $\overline{\text{ECHANGE}}$ will then inhibit the circuits described above during time T2 for the range change. $\overline{\text{ECHANGE}}$ is always produced as long as there is a possible change of range.

If TP5 remains "1" during time T2, but not for the whole time, IC20 cannot be set again, since its gates will not be enabled. Therefore, a "1" cannot be produced at TP7 to produce another RANGE CLOCK signal. However, if TP5 stays "1" for this or more T2's, the process will repeat for as many range changes required.

Flip-flop IC18 is cleared by the output IC17(6), which causes the flip-flop T input to go to "0" again, resetting the flip-flop, or when all the inputs to gate IC14 are "1"

Main Gate. The main gate produces two separate clock pulses, one for the 1I counter (EICLK) and one for the 2I(R) counter (ERCLK). Figure 4-45 shows the circuit. The clock pulses are produced by signal PCLK12, which drives the flip-flops, and the PCLK23 pulse. When the flip-flop is set to "1", and a "1" is present at all the inputs to NAND gates 31, except the PCLK23 input, the PCLK23 pulse is passed through the gates when it is applied to the NAND gates under this condition. The following signals disable the main gates:

1. $\overline{\text{PLEAKOFF}}$ ("0" at NAND 31 when measuring leakage).
2. $\overline{\text{PIG}}$ and/or $\overline{\text{PRG}}$ (a "0" to disable the appropriate NAND 31 circuit and turn off clock).
3. $\overline{\text{ECHANGE}}$ from the delay circuit.
4. 1I$\overline{\text{OR}}$ ("0" when 1I counter is 00000 and reverse).
5. 2I$\overline{\text{OR}}$ ("0" when 2I counter is 00000 and reverse).

File Courtesy of GRWiki.org

6. Timing flip-flop (IC's 30 and 33) outputs that synchronize the clock with the range change.

7. $\overline{PRIG}$ when the bridge is balanced and not in the track or test modes or when an external INHIBIT signal is applied to the DATA-OUTPUT connection.

8. $1I\overline{9F}$ ("0" if 1I counter is 1999•F).

9. $2I\overline{9F}$ ("0" if 2I counter is 19999•F).

Signal PRIG enables both clocks in the test and track modes, when the bridge is unbalanced, and if it is not externally inhibited. This signal, however, is not synchronous with PCLK23 and therefore could possibly come up during a PCLK pulse, causing a short pulse. The timing flip-flops synchronize the PRIG signal with PCLK12 before PCLK23 is allowed into the main gate. T2 ($\overline{ECHANGE}$) from the range delay is also synchronized.

The timing flip-flops disable the applicable main gate when the 1I or 2I counter reads 19999 and forward (9F). When IC20 of the time-delay circuit is reset, indicating time-delay T2, the timing flip-flop(s) is set, enabling the gate(s), if the other conditions are favorable. When 1I9F, $2I\overline{9F}$, $2I\overline{OR}$, $1I\overline{OR}$ or YDOWN is a "0", signal ERAN is produced and forwarded to the Z board to light the RANGE indicator, indicating a change of range may be required.

Range Counter Clock. Figure 4-41 shows the range counter clock circuit. Normally, JK flip-flop IC18 is reset, Q being a "0". Gate IC17(6) is then disabled, its output a "1". This output is fed to IC17(9) as an enabling level. When a RNGUP or RNGDWN signal goes to "0", indicating a range change may be necessary, the JK flip-flop inputs are enabled by the resultant "1" at IC14(6). Since a change of range has been indicated, TP7 on the range delay will have gone to "1", This produces a "1" at point G, the flip-flop clock input. When TP7 goes to "0" at the end of time T1 (6 ms), the flip-flop will be set if signal RNGUP or RNGDWN is still "0". When set, gate IC17(6) is enabled and PCLK23 is gated through when applied to the gate. Since IC17(10) is now a "1", the flip-flop will be reset when IC17(6) goes back to "1" after PCLK23 is gated through it. The $\overline{Q}$ output to IC14(5) ensures that the flip-flop is reset in case the range control signals go to "1" before the reset action occurs.

Counter and Decoder. These circuits are described previously in this paragraph. Note that indicator lamps DS3 through DS6 on the board light to indicate a BCD count (1-4-2-8) and will light appropriately for any given 1 to 9 count. The counter is somewhat similar to the 1I and 2I counters, the forward and reverse action being produced in the same manner. The counter is also a 4-stage counter, with counts of 10-15 prohibited. This counter, however, prohibits a zero count.

4.4.12 Counter Circuits (Figures 6-11 and 6-12).

The two counter circuits (I boards) are designated the 1I counter and the 2I counter. The 1I (I) counter is associated with the measurement of inductance and capacitance, the 2I (R) counter with resistance and dissipation-factor measurements. Both counters are identical; therefore, only the 1I counter will be described.

Figure 6-11 is a block diagram of the 1I counter and associated displays. The counter consists of four, 4-stage 1-2-4-8 BCD decades and one flip-flop. The decades arranged to count 0 to 9 and are cascaded to count "units", "tens", "hundreds", etc. The flip-flop, referred to as the "spillover" flip-flop, counts 1 when the four decades exceed a 9999 count, thus indicating a "ten-of-thousands" count. The counter is a reversible counter, counting forward as well as reverse. For example, when the decades are reset to zero, the first decade ("units") will count up to nine and enable the next decade. The next clock pulse (CLK) will then set the next decade to a one count and the "units" decade to zero. The "units" decade will again count to nine and the "tens" decade will be set to a two count, and the "units" decade to zero on the twentieth clock pulse. This is repeated until the four decades and flip-flop count 19999.

If the counter counts reverse, a decade preceding another decade provides an enabling signal to that decade when it (the preceding decade) reaches a count of zero. The next clock pulse then causes both decades to count down one count (the first decade counts a nine). Clock-type flip-flops are used in the counters.

The operation of the counter depends on the clock signal and the Reverse (R) and Forward (F) signals. The clock signal is produced on the reference board (S board) and passed through the main gates on the range board (E), which generate two separate clock pulses – one for the 1I counter and one for the 2I counter. The clock pulse rate is determined by the magnitude of the error signals, DE.

A fast clock rate is produced for a large error, and a progressively slower clock rate is produced for a smaller error. The clock signal can be gated on or off on the E board by certain conditions described further on in this paragraph. Refer to paragraphs 4.4.9, 4.4.10 and 4.4.11 for a description of the clock signals.

The F and R (PRR) signals determine the direction the bridge should balance, i.e., the direction the counters should count – forward or reverse. These signals are produced on the P board by the phase-detector flip-flops. When the bridge is balanced, the same circuitry on the P board produces a "stop" signal that inhibits the clock signal-gate on the E board, which stops the counters from counting. The reverse signal (PIR or PRR) is a logical "1" that causes the counter to count in reverse. The reverse signal is the inverse of the forward signal (F), as shown in Figure 6-11.

The output of the counters is fed to inverter-drivers and decoders on the display board. The inverted outputs of each decade are applied to a single decoder which decodes the count (0 to 9) of the decade and provides outputs to

File Courtesy of GRWiki.org

the numerical readout tube and indicators on the front-panel display.

The $\overline{Q}$ output of each flip-flop in the counter circuit is fed to the appropriate divider board and to the data-output board (N board) and socket for driving peripheral equipment. At the divider board, the signals are applied to a ladder network that adjusts the divider in such a way as to minimize the error signal. The counters are then operating and adjusting the precision dividers and will continue to count until a balance is reached or there is overshoot, at which point the counters will reverse direction and count until a balance is finally achieved. The counters (or actually the displays) will then read the value required to adjust the divider and reduce the error signal to zero and, therefore, the value of the part under test.

The outputs of the counters are also applied to three NAND gates, two of which are extended NAND gates. The Q side of flip-flops 1 and 4 (9 count) in each decade and the spill flip-flop are ANDED to provide a "0" output when a count of 19999 forward (F) exists; this is the $\overline{9F}$ signal. When a count of 00XXX, or only a "hundreds" count exists, the $\overline{Q}$ outputs of the spillover flip-flop and flip-flops of the "thousands" decade counter are ANDED to provide a "0" output (00 signal). When all the flip-flops indicate a 00000 count, the $\overline{Q}$ logical "1" outputs of all the flip-flops are ANDED to provide a "0" ($\overline{OR}$) that indicates all the decades read zero. These signals are fed to the E board for detecting a change in range and inhibiting the main gates. Signals $\overline{OR}$ and $\overline{9F}$ will also be used for lighting the front-panel RANGE indicator, indicating a RANGE change may be necessary. Signals 00 and $\overline{9F}$ are used by the up-range and down-range circuits for detecting the range change. The $\overline{OR}$ signals (1I and 2I) disable the appropriate gate of the main gates on the E board that gates the clock (CLK) pulses to the counters. The counters continue counting until a balance is reached; range changes occur as necessary.

All the decades can be set to a zero count by pressing the front-panel SET ZERO pushbutton switch. This produces signal ZSETO that resets the decades.

4.4.13 Auxiliary Board (Figure 6-20).

The Auxiliary (data-input) board (Q board), an available accessory, acts as a buffer for input and output programmable signals between the 1683 circuits and peripheral equipment; these buffered signals are those used for programmable operation of all control functions of the 1683 except line-voltage control. Most of the signals are compatable with diode transistor logic (DTL) and transistor-transistor logic (TTL or T^2L) or can be controlled by switch closures to ground. Therefore, the input signals can be standard DTL or TTL signals with non-critical rise and fall times. Signals LEAKOUT and LEAKAGE are analog signals. YGL is used with LEAKOUT and SENS. SENS is a programmable resistance tied between the SENS input (Q board) and YGL, to externally establish the sensitivity of the instrument, if desired. Timing of the signals is not critical and only the pulse width of the $\overline{QSING1}$ is critical; the width must be greater than 0.5 μs and less than 50 ms. (The input START signal on the N board is the only other signal that has a critical pulse-width requirement; this must be greater than 20 μs.)

Filters on all of the input lines provide noise suppression. IC gates for input signals are activated when the front-panel mode switch is set to REMOTE, gating the signals to applicable circuits. Most of the input signals are routed through the front-panel control board (Z board), where they are gated or switched to applicable lines. Output signals are received via the mother board (M board) and after inversion are fed directly through the socket on the board to external equipment. Table 4-11 lists the input signals, their function, and routing.

Externally applied signals should be approximately zero volts, or a switch closure to ground, with a 10-mA sink capability. Table 4-12 lists the output signals from the Q board to external equipment, describes the functions they perform, and identifies the origin of the signal.

4.4.14 Data-Output Board (Figure 6-17).

The data-output board (N board), an available accessory, provides a buffer between the 1683 circuits that drive the front-panel indicators and external recording or similar type equipment (data printers, card punches, etc.), for recording data. Two types of boards are available; one for a low-level data output, and one for a high-level data output. The low-level board provides 11 digits of measurement data (5 for resistance, 5 for reactance, 1 for range) plus various control inputs and outputs for system use. Digits are 1-2-4-8 weighted BCD at standard TTL logic levels (logical "0" ≈ ground with a 10-mA sink capability; logical "1" ≥ 3.5 V).

The high-level data output is the same as the low-level, except all outputs are of a 15-V swing (logical "0" ≈ ground with a 10-mA sink capability; logical "1" ≈ 15 V behind 12 kΩ).

The 1683 can be started with a direct-coupled or ac-coupled START signal input to this board. This signal can be a maximum of ± 50 V. The ac-coupled signal must be greater than 8 V, peak. Both types of signals must be present for a minimum of 20 μs. The dc- or ac-coupled signals can be connected on the board to trigger a start pulse ($\overline{NSING2}$) on the positive- or negative-going transition of the START pulse. The dc-coupled signal can be connected to trigger the pulse a +5-V, -5-V, or +1.5-V level. Instructions for making the applicable connections are given on the board schematic. Wires are provided on the board for the connections and may be soldered if desired.

The IC inverters enclosed in dotted lines on the schematic are plug-ins and can be removed and replaced for interchanging the logic levels described above.

File Courtesy of GRWiki.org

Table 4-11
Q-BOARD INPUTS

Signal	Routing	Function
SING1	Directly to P board.	Electronic pulse that starts a balance or leakage operation. Pulse width must be greater than 0.5 μs, but less than 50 ms.
STOP	Via Z board. Connects to PRIG signal output (pin 16) on P board.	Inhibits main gates on E board, turning off counter clocks for any mode of operation.
INHIBIT	Directly to P board as $Q\overline{INH}$.	Allows peripheral equipment to inhibit start of operation by inhibiting signal QSING1 derived from an external source, and as signal $Q\overline{INH}$, inhibits start operation by PVMR generator on the P board.
CLRDATAFF		Clears F-F IC14, if set, to indicate the bridge is busy performing an operation.
DONE	From P board.	Signal produced by "Balance" F-F (IC26) and "start" F-F on P board to indicate to external equipment that the bridge is busy with an operation. When signal goes to "1", indicates the bridge is balanced and awaits a command.
TRACK	Via Z board to P board.	At P board, produces signal $\overline{PRIG}$ that holds main gates on E board open so that counter clocks will run continually (usually for measurements).
VAR	Via Z board to P board.	Allows the rate of variable measurement rate generator, and, therefore, the rate of a balance or leakage-current measurement, to be manually regulated with the front-panel VARIABLE MEAS RATE control.
$\overline{BIAS}$	To J board	Disables the power amplifier (J board) bias input when it is desired to change or vary the bias.
RNG1-RNG9	Via Z board to Z board matrix and Y board.	At Z-board matrix, produces signals to drive indicators on display board. At Y board, adjusts the Y-bridge current divider connected to the low-current terminal, to establish the range of the instrument. Table 3-1 lists the ranges.
RAUTOEXT	Directly to E board.	When the instrument is in the remote mode, signal will override the remote mode and activate the 1683 range counter for automatic operation. Signal will also disable the gates on the Q board that gate in external range (RNG1-RNG9) signals.
1000	To Z board. As ZS3 to Z board matrix and C, D, M, S, and T boards. As ZL1 and ZL10 to H and U boards. As $Z\overline{S3}$ to Z-board matrix. As $Z\overline{S3D}$ to D board.	Allows measurements at 1 kHz. ZS3 switches in paths, components, or filters for a 1-kHz signal and activates the Z-board function-display gates for 120-Hz measurements. ZL1 activates U-module 120-Hz lamp and ZL0 activates U-module 1-kHz lamp. $Z\overline{S3D}$ switches in components in the anticipator circuit on D board.

File Courtesy of GRWiki.org

Table 4-11 (Cont)
Q-BOARD INPUTS

Signal	Routing	Function
LR	To Z board. As ZS2 to Z-board matrix and E, J, K, M, and P boards.	Allows measurement of inductance or series resistance. $\overline{ZS2}$ disables C-function range-display gates on Z board. ZS2 enables L-function range-display gates on Z board, switches in bridge divider and inductance standard on K and M boards, and indicates to E, P, and J boards that inductance is being measured.
CD	To Z board. As ZS1 to Z-board matrix and B divider. As ZS2 to D front-panel display and P board.	Allows measurement of capacitance with D as a loss. ZS1 enables function- and range-display gates on Z board and switches in the positive input to B-divider output operational amplifier (positive gain for D).
CR	To Z board. As ZS4 to relays on B and C dividers.	Allows measurement of capacitance with equivalent series resistance (ESR). ZS4 switches C divider into bridge, switches out the YC path and switches in the output of the C divider (CC path) to the B divider.
LEAKOFF	To Z and P boards.	A "0" inhibits a leakage-current measurement by disabling F-F IC28 on P board, so that alternate start pulses will not produce a leakage measurements (if leakage and capacitance are being measured).
LEAK2-LEAK5 (LEAK1 is not used)	Via Z board to L board.	Establishes five ranges in which the current can be measured, by switching in appropriate feedback networks on the L board input amplifier. Table 3-2 lists the magnitude of the ranges for each signal.
SENS	Via Z board to S board.	Programmable external resistor (R_{ext}) tied between SENS and YGL that loads the SENS output (1 kΩ) on the S board, establishing externally the instrument's sensitivity level; i.e., count error to one count or less, 8 counts or less, etc. Refer to paragraph 3.11 for details.
YGL		Ground reference that must be used when measuring LEAKOUT or using SENS input.
SET 0	Via Z board to I and R counter boards.	Sets counters and displays to zero whenever it is desired to do so.
REMSET		For external leakage-current measurements (para. 3.19). A momentary "0" applied after the time allowed for the leakage measurement produces a "go" indication (REMGO) for an acceptable leakage current.
LEAKAGE	Via Z board to L board.	Leakage reference signal in lieu of front-panel-controlled leakage-reference signal. Zero to 25 V, corresponding to the ratio: leakage current = V/10, for selected range.
SIGOFF	Q board as QOSCOFF	Disables oscillator for performing leakage measurements only.

File Courtesy of GRWiki.org

Table 4-12
Q-BOARD OUTPUTS

Signal	From	Function
$\overline{\text{DONE}}$		Derived from signal PBUSY. Indicates instrument is performing a balance or leakage-current operation. Signal goes to "1" when operation is completed.
PRR	P board	Commands resistance counter (2I) to count reverse ("0" reverse, "1" forward).
PIR	P board	Commands reactance counter (2I) to count reverse ("0" reverse, "1" forward).
BAL	E board	"0" indicates bridge is balanced.
UNBAL	S board	"0" indicates bridge is unbalanced, (error is more than 8 counts.)
NG	L board	When signal output goes to "1", indicates leakage-current within established limit.
LEAKOUT	L board	Analog signal from 0 to −2.5 V proportional to the leakage current in the measurement range; e.g., 2.5 V equals 2.5 μA, 25 μA, 250 μA, etc. (Refer to Table 3-2.)
ABORT	P board	Indicates unbalanced condition has exceeded 3 s, the maximum time allowed for a balance.
RAN	E board	A "1" indicates a change of range is not necessary; a "0" indicates a change may be necessary.
+15 V, −15 V, +5 V	System bias voltages	Reference signals only; not more than 50 mA must be drawn when used for reference.
REMGO	L Board	Used for external leakage-current measurements (para. 3.19). Goes from "1" to "0" after momentary "0" REMSET is applied to pin 47, if an acceptable leakage-current condition exists.
GND(YG)	Ground reference.	

Table 4-13 lists the signals, origin of the signals, and function of the signals handled by the N board.

4.4.15 Display Board (Figures 6-9 and 6-10).

General. This display board (H board) presents all the visual information to the operator. The value of the measured unknown is shown by numerical readout tubes (V1 to V10). These tubes are driven by four-to-ten line decoder-drivers (IC's 2-5 and 7-10) that convert the 1-2-4-8 code from the 1I and 2I counter decades to 10-line decimal data. IC's 1, 6 and 11-14 act as buffers between the converter-drivers and the counters.

Range signals from the Z board switch in transistors Q1-Q4 and Q7-Q9 to illuminate the appropriate decimal point of a readout tube. The readout tubes are plug-ins and are replaceable.

There are three modules containing indicator lamps that plug on to the H board. These are designated the F, G, and U modules.

F. Module. This module contains the GO, NO GO, D, KΩ, Ω, and MΩ, lamps. These are driven by appropriate

File Courtesy of GRWiki.org

Table 4-13
N-BOARD SIGNALS

Signal	Origin	Function
COLOR	P-board balance flip-flop and delay circuit (signal PABORT)	Indicates a balance operation has exceeded 3 s, the maximum time allowed. Signal is useful for producing a printout in a different color, indicating an unsatisfactory balance.
BUSY	P-board balance flip-flop.	Produces a print-data command when a balance is completed.
INHIBIT	External equipment	Produces signal $\overline{\text{PRIG}}$ that inhibits the main gates on E board and hence the displays.
START	External	Starts balance operation. Details of signal are given at the beginning of this paragraph. Signal INHIBIT must be removed before a START signal is applied.
NI0-NI16	1I board (I)	BCD outputs of counter decades to drive five digits. NI16-13 is first digit, NI12-9 is second digit, etc. NI0 is tens-of-thousands digit (spillover).
NR0-NR16	2I board (R)	Same as above except for 2I board (R data).
RNG 1, 2, 4, 8	E-board range counter	Establishes measurement range. Refer to Table 3-1 for ranges. Signals are in BCD weighting of 1-2-4-8.
NVREF		Logical "1" voltage reference. Not more than 50 mA must be drawn when used for reference.
GND		Ground references.

signals from the control (Z) board. The functions of these and the lamps in the other modules are described in paragraph 1-3. The module and the G and U modules also contain spare lamps for the symbols in case a lamp burns out.

G Module. This module contains the RANGE, UNBALANCED, H, mH, μH, nH, mF, μF, nF, and pF lamps. These lamps are also driven by signals from the Z board.

The RANGE and UNBALANCED lamps each consist of two bulbs.

U Module. This module contains frequency indicator lamps 120 Hz and 1 kHz. Each of these lamps consist of two bulbs.

4.4.16 Power Supply and Transformer (Figure 6-25).

The power supply provides a regulated −15 V, +15 V, +10 V, and +5 V for circuit operation. The regulator circuits are on the power supply board (V board). The line-transformer secondary and associated rectifiers supply +21.5, −21.5, and +8 V to the regulator circuits on the board; +8 V and −8 V to the amplifier board (J); +250 V to the H board numerical readout-tubes; and signal ASYNC, a1−Vac signal that synchronizes the oscillator with the line frequency, to eliminate any "beating" effect.

The bias voltages are regulated by feedback circuits to amplifiers. The −15−V supply has a "starter" circuit (R16, R18, and CR4) with an output, 'A', that starts up the +15 V supply.

Both the −15 V and +15 V supplies have adjustments that may, on occassion, require adjustment. Since the −15 V supply starts the +15 V and the +15 V supply biases the +10 V and +5 V supplies, the −15 V supply must be adjusted first.

A circuit breaker, A-CB1, in the input line protects the IC's by shutting down the bridge if the +5 V bias voltage becomes excessive. A line selector switch on the rear of the instrument allows selection of line voltages of 100-125 V or 200-250 V. A 1.25-A Slo-Blo fuse is provided for the 100-125 V, and a 0.6-A fast acting fuse for the 200-250 V. When the instrument is turned on, a blower, A-B1, circulates cooling air through the instrument.

File Courtesy of GRWiki.org

4.4.17 Control Board (Figures 6-27 and 6-28).

The control board (Z board) contains the controls and circuitry that activate and control the functions of the bridge, and contains decoders that decode the count of bridge range counter to drive the decimal points and component symbols on the display board (H). The decoder outputs are fed to gates associated with H. F, and Ω quantities and dissipation factor. The applicable gates are enabled by the position of the function selector and by the selected 120-Hz or 1-kHz measurement (signals $Z\overline{S3}$ and ZS3, respectively). Signals that light front-panel indicators (LNG, LGO, ERAN, and SUNBAL) are also routed through the Z board to the display board. Signal PRIG, which controls the main gates on the range board (E), is also routed through the board to inhibit counting during switching.

Programmable control signals that can control the 1683 in lieu of front-panel controls are routed from the Q board (when used in the instrument) when the front-panel controls are set to REMOTE. In this position the controls enable input gates on the Q board, allowing signals to enter the 1683. Also, in this position, the controls allow outputs from the instrument that are necessary for programmable operation. The Q board schematic shows the signals. Paragraph 4.4.13 describes the signals and their function. These signals include the range, leakage range and control, mode, start, measurement condition (LNG, ERAN, UNBAL) shown on the Z board, in addition to signals routed directly to the Q board.

Circuitry on the schematic is self-explanatory. Paragraph 1-3 contains a description of the controls and their function.

File Courtesy of GRWiki.org

File Courtesy of GRWiki.org

Service and Maintenance—Section 5

5.1 GR FIELD SERVICE 5-1
5.2 INSTRUMENT RETURN 5-1
5.3 REPAIR OF PLUG-IN BOARDS 5-1
5.4 MINIMUM PERFORMANCE STANDARDS 5-1
5.5 PARTS LOCATIONS 5-4
5.6 REMOVAL-REPLACEMENT 5-8
5.7 REFERENCE DESIGNATIONS 5-8
5.8 TEST POINTS 5-8
5.9 CIRCUIT BOARDS INDICATOR LAMPS 5-8
5.10 PERIODIC MAINTENANCE 5-14
5.11 CHECKS AND ADJUSTMENTS 5-14
5.12 TROUBLE ANALYSIS 5-21
5.13 SERVICING ETCHED-CIRCUIT BOARDS 5-21

WARNING

High voltages, constituting potentially dangerous shock hazards, exist in the circuits inside the cabinet of this bridge. If troubleshooting is necessary, it should be performed by qualified personnel familiar with the hazards inherent in high-voltage circuits.

5.1 GR FIELD SERVICE.

The warranty statement attests the quality of materials and workmanship in our products. When difficulties do occur, our service engineers will assist in any way possible. If the difficulty cannot be eliminated by use of the following service instructions, please write or phone our Service Department (see last page of manual), giving full information of the trouble and of steps taken to remedy it. Be sure to mention the serial, ID, and type numbers of the instrument.

5.2 INSTRUMENT RETURN.

Before returning an instrument to General Radio for service, please contact our Service Department or nearest District Office requesting a "Returned Material" number. Use of this number will ensure proper handling and identification. For instruments not covered by the warranty, a purchase order should be forwarded to avoid unnecessary delay.

5.3 REPAIR OF PLUG-IN BOARDS.

For prompt replacement of etched-circuit board(s), a replacement can be ordered, and the faulty board returned after receipt of the replacement. Contact your nearest General Radio Repair Facility (see last page), supplying them the type, serial number and identification number of the instrument; the board part number (refer to the parts list for the number; the number etched on the foil-only-solid-side is ***not*** the part number) and letter designation (if any); and a purchase order number. The P.O. number allows for billing if the unit is out of warranty and/or for identification of the shipment. The repair facility will arrange for the prompt delivery of a replacement.

To prevent damage to the board, return the defective board in the packing, or equivalent packing, supplied with the replacement. Please identify the return with the Return Material number on the tag supplied with the replacement and ship to the address indicated on the tag.

5.4 MINIMUM-PERFORMANCE STANDARDS.

5.4.1 General.

The following paragraphs contain information to determine that the 1683 is performing within specifications. The procedures enable instrument-standards laboratories and equivalently equipped service facilities to perform checks at periodic intervals and after repair, to determine that the instrument is operating properly. These procedures are bench checks that require the use of front-panel controls and externally available test points (i.e., instrument disassembly is neither required or recommended).

Table 5-1 lists the recommended test equipment for a minimum performance check, adjustment and calibration procedures, and trouble analysis.

The following checks are included, to determine that the instrument is operating properly:

1. Measurement accuracy
2. Counter check
3. Ranging check
4. Leakage-current function
5. Oscillator-level check
6. Remote-operation check.

File Courtesy of GRWiki.org

Table 5-1
TEST EQUIPMENT

Instrument	Requirement	Recommended*
Oscilloscope	5 m V/cm sensitivity, 10-MHz bandwidth, 35-ns rise time, dual trace.	Tektronix type 535
Oscilloscope plug-in		Tektronix Type 1A1
Digital voltmeter	Range 5 – 15 V with 1% of reading accuracy; 250 V with 5% accuracy; impedance greater than 100 kΩ	Data Precision Model 2540 DVM
	120- and 1-kHz frequencies; range 0-5 V, 100 kΩ impedance; accuracy ±2% of reading	
Electronic counter	Range 120 Hz – 1 kHz, sensitivity 1 V rms, impedance 100 kΩ; five-digit readout	General Radio Type 1192 Counter
Precision capacitors	1000 pF	GR Type 1404-A
	100 pF	GR Type 1404-B
	10,000 pF	GR Type 1615-P1
	.01 μF	GR Type 1409-L
	0.1 μF	GR Type 1409-T
	1.0 μF	GR Type 1409-Y
	10.0 mF	GR Type 1417
Precision decade capacitor	100 pF – 1.005 μF in 100-pF steps. .05% accuracy	GR Type 1423 Precision Decade Capacitor
	1 – 10 μF in 1–μF steps	GR Type 1424-A Decade Capacitor
	10 μF – 100 μF in 10-μF steps	GR Type 1425 Decade Capacitor
	10 μF – 0.1 F for measurements at 10 μF, 100 μF, 1000 μF, .01 F and 0.1 F at 120 Hz	GR Type 1426 Capacitance Standard
Precision resistor	1 Ω – 10 kΩ in 1-Ω steps, .02% accuracy	GR Type 1433-J Decade Resistor
	1 kΩ – 10 MΩ in 10-kΩ steps (for leakage-current measurement only)	GR Type 1434-P Decade Resistor
	1, 10, 100, 1 k, 10 k, 100 k, and 1 MΩ; accuracy .01%; .01 Ω and 1 Ω (other special valves available)	GR Type 1440
Standard inductors	10 H, 1 H, 100 mH, 20 mH, and 100 μH	GR Type 1482 Standard Inductors
	1 μH, 10 μH and 100 H	Suitable precision inductors
Extender boards	———	Refer to Table 1-3.

*Or equivalent

File Courtesy of GRWiki.org

Table 5-2
COUNTER CHECK

Step	Mode Switch Position	Display	Indication
1	Press SET ZERO switch		
2	TEST 1	Reactance	Counts from 00000 to 19999
3	TEST 2	Reactance	Counts from 19999 down to 00000
4	TEST 3	Resistance	Counts from 00000 to 19999
5	TEST 4	Resistance	Counts from 19999 down to 00000

5.4.2 Measurement Accuracy.

Perform the operational check in paragraph 3.13. This check is for all functions (CsD, CsRs, and LsRs, at both measurement frequencies) except leakage current, and verifies the measurement accuracy at each range for these functions.

5.4.3 Counter Check.

Although this check is not for verifying any instrument specifications, it is a preliminary check that can be performed before checking the ranging capabilities. To ensure that the numerical displays operate properly:

a. Set the function switch to either LsRs, CsD, CsRs or REMOTE and press the SET ZERO push-button switch; all the displays should read zero.

b. Set the mode control to the positions listed in Table 5-2 and observe the indications as listed. The FAST-SLOW control can be used to vary the speed of the count.

5.4.4 Ranging.

NOTE

The range limits are defined in Table 3-1.

To ensure that the counters, displays and ranging circuits operate properly:

a. Set the function control to LsRs 1 kHz, RANGE control to AUTO, and mode control to SINGLE MEAS.

b. Connect the + CURRENT terminal to the +POTENTIAL terminal and the –CURRENT terminal to the –POTENTIAL terminal, using clip leads or coaxial cables.

c. Set the mode switch to TEST 1; the reactance display should count to a maximum reading of 199.99 H.

d. Set the mode switch to TEST 2 and count the reactance display to 010.00 H or slightly greater than this reading.

e. Set the mode switch to TEST 4 and count the resistance display down to less than 0100.0 kΩ.

f. Set the mode switch to TEST 2 and count down at a slow rate (use the FAST-SLOW-STOP control). At every second count below 01000, the reactance display should change range. For example, starting at 01000 the range should change after 00998 after 00996, etc., until the lowest range of 1999.9 nH is reached.

g. Set the mode switch to TEST 1 and count the reactance display up to 1.9999 nH, after which the bridge should up-range until the upper range of 199.99 H is reached.

h. Set the mode switch to TEST 4 and count the resistance display down to slightly greater than or to 01001; set the mode switch to TEST 2 and count the reactance display down less than 010.00 H.

i. Set the mode switch back to TEST 4 and count the resistance display down slowly to less than 01001 and observe that the range down-ranges at every second count until the lowest range of 19.999 mΩ is reached.

j. Set the mode switch to TEST 3 and count the resistance display up to 19.999 mΩ, after which the bridge should up-range until the upper range of 1999.9 kΩ is reached.

k. Set the FAST-SLOW-STOP control to STOP.

l. Set the function switch to CsD 1 kHz.

m. Using the mode switch TEST positions and FAST-SLOW control, set the reactance display to less than 199.99 pF; the D display can be at any reading.

File Courtesy of GRWiki.org

Table 5-3

LEAKAGE-CURRENT CHECK

Leakage-Current Range	Applied Voltage	Series Resistance (Ω)	Current
1 μA	1	10 M	0.1 μA
1 μA	1	1 M	1.0 μA
1 μA	2.5	1 M	2.5 μA
10 μA	1	1 M	1,0 μA
10 μA	1	100 k	10 μA
10 μA	2.5	100 k	25 μA
100 μ	1	100 k	10 μA
100 μA	10	100 k	100 μA
100 μA	25	100 k	250 μA
1 mA	10	100 k	100 μA
1 mA	10	10 k	1 mA
1 mA	25	10 k	2.5 mA
10 mA	10	10 k	1 mA
10 mA	10	1 k	10 mA
10 mA	25	1 k	25 mA

n. Using the TEST 1 switch position, count the reactance display up to 199.99 pF. Continue to count up slowly and observe that the range changes range (down-ranges) until range 19.999 mF is reached.

o. Set the mode switch to TEST 2 and count the reactance display to read 01.000 mF, after which the bridge should up-range until range 199.99 pF is reached.

NOTE

The operation of remote programming of the functions, if included, can be verified by grounding the appropriate function pin-connection on the auxiliary board socket. (See Section 2.)

5.4.5 Leakage-Current Check.

To check the leakage-current function, if included in the instrument:

a. Apply the currents listed in Table 5-3 to the −CURRENT measurement terminal by connecting the resistors listed, in series with a variable power supply source that supplies the voltages listed in Table 5-3 and the −CURRENT terminal. A GR Type 1434-P Decade Resistor is recommended. The internal 3-V bias supply can be used for the lower voltages, by connection of the appropriate resistance between the + and −CURRENT terminals. This voltage will have to be monitored with a voltmeter to obtain an accurate setting.

b. At each current listed, set the LEAKAGE variable control to slightly more than the measured current.

c. Set the function switch to CsRs or CsD and turn on the instrument; set the VARIABLE MEAS. control for a slow measurement rate and observe that the GO indicator lights. Refer to the calibration procedure in paragraph 5.11.8, if the proper operation is not observed.

d. Set the LEAKAGE variable control to slightly less than the measured current and repeat a measurement. Observe that the NO GO indicator remains lit.

This check can also be performed by measuring capacitors whose leakage-current is known, according to the leakage-current operating procedure in Section 3.

5.4.6 Oscillator-Level Check.

If it is desired to check the oscillator level, connect an oscilloscope or voltmeter to the +CURRENT terminal and set the OSC LEVEL control to 2.2; the voltage should be 2.2 V, open circuit.

5.4.7 Remote Programming and Data Outputs.

If the instrument contains these features, they can be checked by referring to the information contained in paragraphs 2.4 and 3.11. Information for checking appropriate functions is contained in these paragraphs.

5.5 PART LOCATIONS.

Most of the parts and internal adjustments are on the etched-circuit boards. Figures 5-1 through 5-5 identify the locations of these adjustments and parts. Also shown are the adjustments on the mother (M) board for the capacitive standards.

Parts associated with the line-voltage rectifier are on the transformer shield assembly, under its top cover.

Some transistors and parts associated with the power supply (V board) are on the transistor assembly at the rear of the instrument. Paragraph 5.7 describes the reference designations used to identify chassis and circuit-board parts.

5.6 REMOVAL-REPLACEMENT PROCEDURES.

5.6.1 General.

Turn off the power before removing or installing any parts.

WARNING

When the instrument is energized, there is 250 V present at the top of A-C54 (Figure 5-1), at the transformer shield assembly, under the assembly cover, and at anchor terminal AT1 on the H board (Figure 5-1). This voltage is fed to the numerical readout tubes by means of etched lines under the H board. Be careful when the unit is energized and the chassis is out of the cabinet.

5.6.2 Chassis.

Refer to paragraph 2.5 or 2.6 for instructions on how to remove and install the chassis in the cabinet.

File Courtesy of GRWiki.org

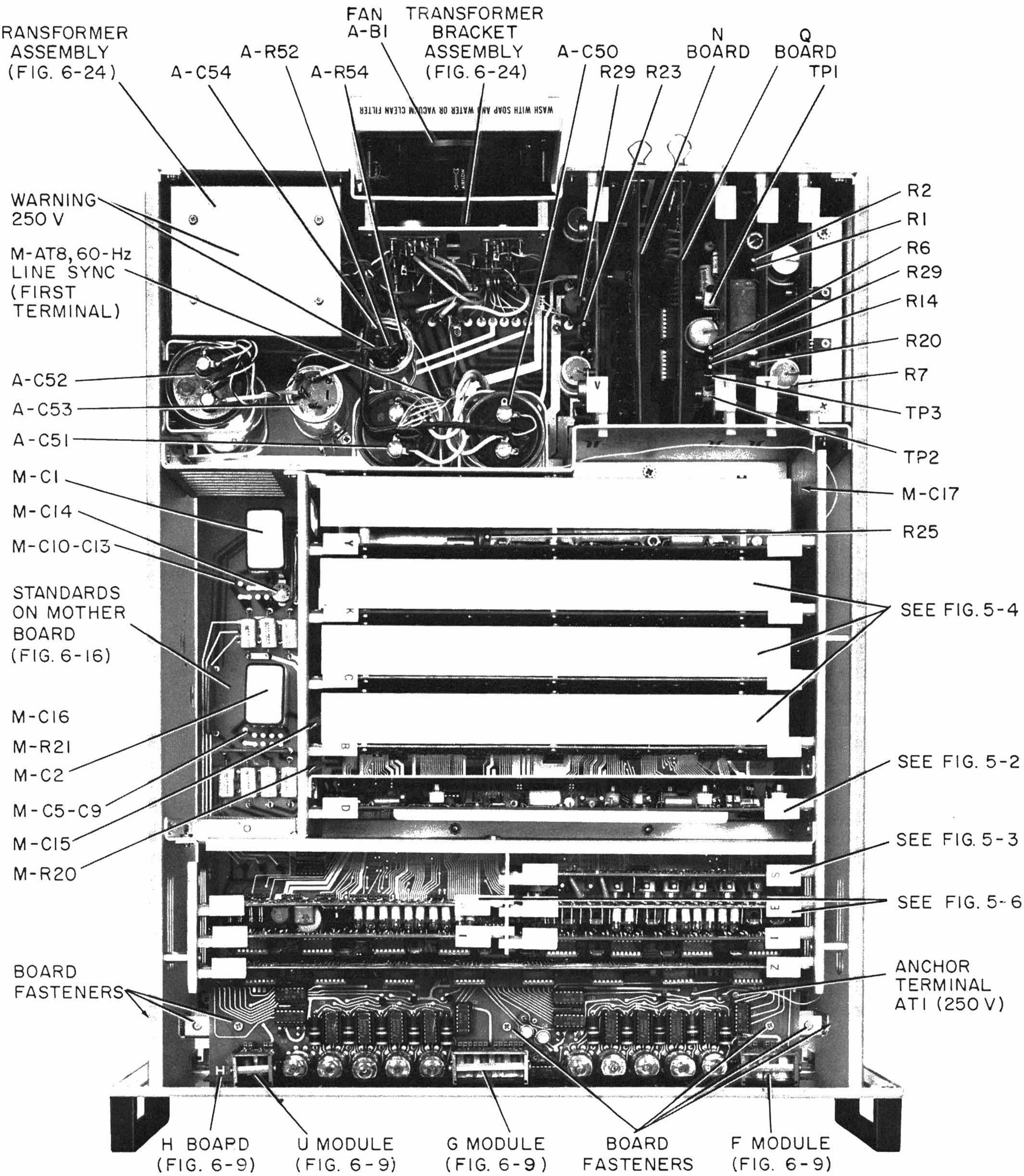

Figure 5-1. Top interior view identifying parts, adjustments, and terminals.

File Courtesy of GRWiki.org

CAUTION

Make sure no foreign matter, especially metal, falls on the mother board when the chassis is out of the cabinet. This may short circuit mother board signal lines. Always check that the board is clean before reinstalling the chassis in the cabinet. Also, take care not to bend the socket terminal-pins on the bottom of the mother board. Bent pins could cause a short circuit or malfunction.

5.6.3 Circuit Boards.

Lift up the latches at the ends of the board and carefully pull the board from its socket. To remove the control (Z) or display (H) boards:

a. Carefully disconnect (pull up) the 250-V wire attached to H-board anchor terminal AT1 (Figure 5-1) and touch it to ground to remove any possible charge on capacitor A-C54 at the rear of the chassis.

b. Loosen but do not remove the set screw on each bracket (plastic arm) at the sides of the board. Loosen about ¼ in. the screws on the sides of the chassis that hold the bracket in place (do not remove the screws yet).

c. Move the bracket back about ¼ in. and tighten the set screw; remove the screws at the sides of the chassis.

d. Pull up the Z-board latches and carefully pull up the Z board. The H board will remove with the Z board. Make sure the control knobs clear the display windows.

e. Remove the three screws on the H board (one at each end and one at the middle).

f. Pull or pry with a piece of wood or similar object the H board from the Z board at the green connectors.

Reverse these procedures to reinstall the boards. The component side of the intermediate-sized boards at the front of the instrument face the front. The component side of the large boards face the rear and the component side of the small boards at the rear face to the left. Refer to Figure 5-1. ***Make sure the boards are seated properly and securely in the sockets.***

NOTE

If any difficulty is encountered when replacing the Z board, remove the I boards to allow clearance.

5.6.4 Circuit-Board Extenders.

Perform the board removal procedure above, carefully install the board on the extender, and install the extender in the circuit board socket. (See Figure 5-2.) There are three extenders available as options. The K, C, and B boards must be extended for adjustments (Extender P/N 4215-2703). The S board must be extended for measurement points for adjustments (Extender P/N 4215-2701). All boards, except the Z and H boards, must be extended if it is desired to troubleshoot the parts on a board.

5.6.5 Display Modules and Lamps.

To remove a display module and to replace a lamp:

a. Pull up on the display module to unplug it from the H board.

b. Loosen the Phillips-head screw on the side of the holder and slide up the panel at the front of the module; this will expose the bulbs. Spare bulbs are socket-mounted beside symbol cut-outs. Remove the burned-out bulb (pry-up the base with a screwdriver) and the spare and make the replacement. Refer to the Parts List (F, G, or U module) if all the bulbs have been used. The F and G modules have spares, and these can be used in any of the modules. Reverse this procedure to reinstall the modules.

5.6.6 Readout Tubes.

The tubes unplug from the H board.

5.6.7 Transformer Plate Assembly.

WARNING

When the unit is energized, there is 250 V on parts under the cover. See Figure 6-24.

To gain access to parts in the transformer shield assembly, remove the four screws at the top of the case and remove cover.

5.6.8 Switch Removal - Replacement.

To remove knobs:

a. Set the controls full ccw.

b. Hold the instrument securely and pull the knob off with fingers.

CAUTION

Do not use a screwdriver or other instrument to pry off the knob if it is tight, since this might mar the panel. Do not lose the retention spring in the knob when the knob is removed.

c. Remove the setscrew from the bushing; use a hex-socket key wrench.

d. Remove the bushing.

NOTE

If the knob and bushing are combined when the knob is removed, turn a machine tap a turn or two into the bushing on the dial for sufficient grip for easy separation of the knob.

e. If the switch is to be removed, remove the dress nut exposed after step d.

Install the switches by reversing the removal procedure and performing the following steps:

a. Make sure the control shafts are turned full ccw.

b. Install the dress nut, if applicable.

c. Install the bushing on the shaft; tighten the setscrew.

File Courtesy of GRWiki.org

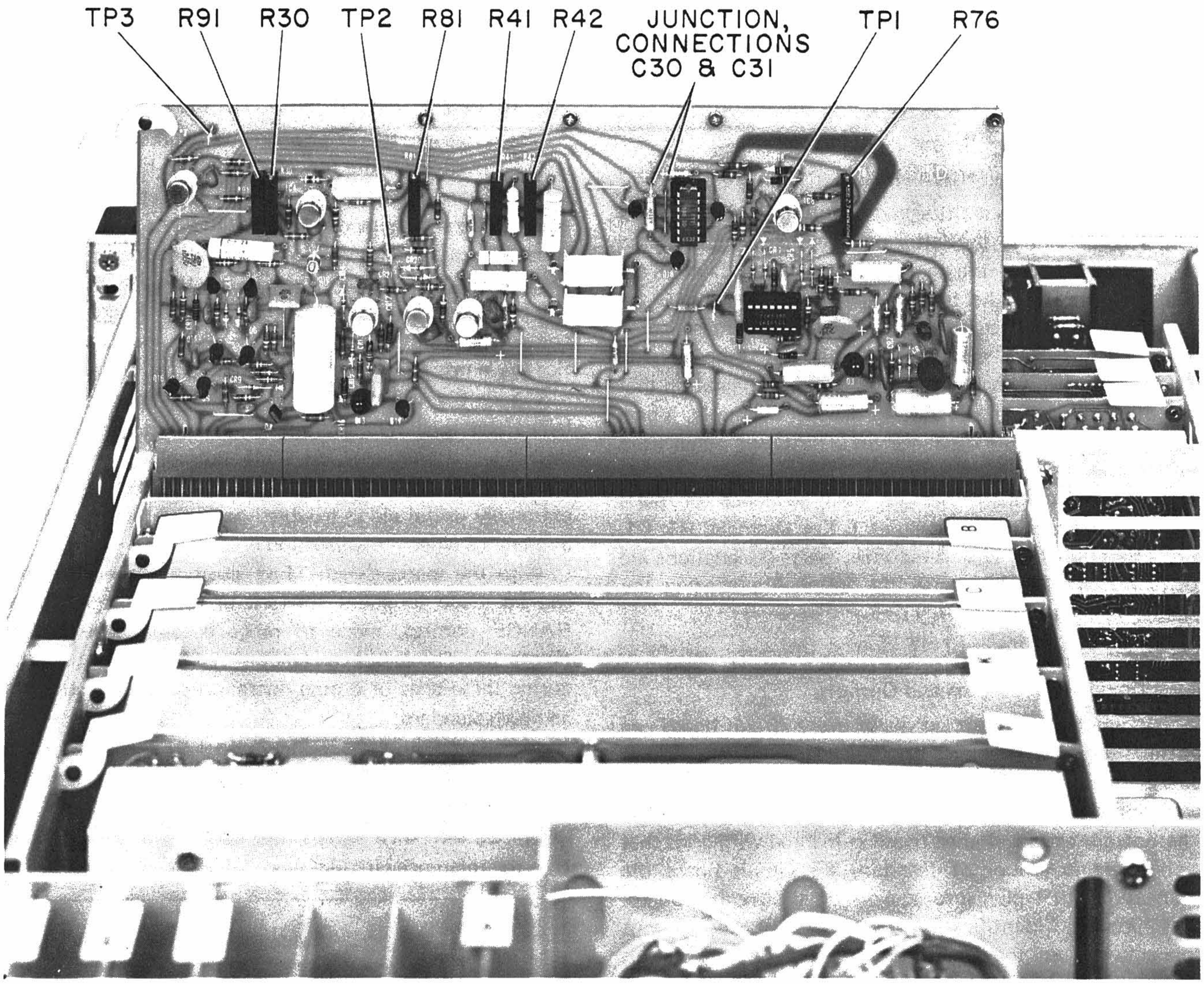

Figure 5-2. D board extended to show test points and adjustments.

File Courtesy of GRWiki.org

NOTE

Make sure that the end of the shaft does not protrude through the bushing, or the knob won't seat properly.

d. Install the knob on the bushing, *making sure the retention spring is opposite the setscrew.*

NOTE

If the retention spring in the knob comes loose, reinstall it in the interior notch with the thin flange set into the small slit in the wall of the knob.

5.7 REFERENCE DESIGNATIONS.

All circuit boards are designated with a letter. Table 4-1 lists the boards and the letter designation. These are used on schematics and diagrams for easy identification of boards and parts. The latches on the circuit boards are marked with the letter for identification of the board.

Each signal name shown on schematics and the wire-run list is preceeded with a circuit board letter designation that identifies the origin of the signal. For example, signal QOSCOFF means the oscillator off (OSCOFF) signal from the Q (auxiliary) circuit board.

Each circuit board has its own sequence of parts reference designations, starting at 1. For example, R1, C1, etc. Front-panel or chassis-mounted parts designations are identified on drawings with the letter A preceding the designation; e.g., A-S1 or A-R1.

5.8 TEST POINTS.

5.8.1 Circuit Board Inputs and Outputs.

The input and output signals of every circuit board can be monitored at terminals on the bottom of the mother board. Remove the chassis from the cabinet according to paragraph 2.5 and set the instrument carefully on its side. The bottom of the mother board is marked with grids that section off in groups of five pins the circuit board pin connections that plug into sockets on the mother board. This provides identification of the input and output connections on the etched-boards and on the circuit schematics. The testing or monitoring device can be connected to the terminals.

A letter designation on the side of the mother board identifies the position of each circuit board. (Letter designations are used to identify boards; refer to paragraph 4.1). The E and C letters with the board designation letter identify the etched- and component-side board pin-connections.

5.8.2 Circuit Board Test Points.

Test points in the form of terminals provide access to significant points in a circuit are on the small- and intermediate-sized boards and on the D board. Most of the boards have the points at the top of the boards. The D and S boards have test points at other areas of the board. The S board must be extended to gain access to these points. The D board test points are available without extending the board. Figures 5-1 through 5-6 identify the points.

5.8.3 Anchor Terminals.

AT's are on the front and rear panels and on the bottom and top of the mother boards. Measurements can be also made at these points. These are identified by the designation AT. Those not identified on the panels are identified in Figure 5-5.

5.9 CIRCUIT BOARD INDICATOR LAMPS.

The program (P) and range (E) boards have indicator lamps mounted on the top of the boards for indicating the status of circuits in the instrument; e.g., the range in the automatic ranging mode, ranging upwards or downwards; counters counting forward or reverse; counter clock gates (main gates) enabled, anticipator function rising, decaying, stopping; and the state of the program board direction control flip-flops. Figure 5-6 shows the boards and identifies the lamps and their function.

Figure 6-4 is a functional flow diagram, showing the lamps and their relationship to the circuit functions. Not shown are the lamps (DS1-DS4) associated with direction control flip-flops on the program board. Figure 6-4 is an extremely useful aid in troubleshooting and can be used for a reference when a malfunction occurs.

With the mode switch TEST positions, the instrument can be made to count forward or reverse, and with the RANGE control, made to range automatically through ranges 1-9. The lamps can be observed for proper operation during these tests or during operation or when testing with a known standard.

CF, CR, GF and GR in Figure 6-19 are the Q outputs of the phase detector flip-flops. These lamps light (Table 5-4) when the outputs are logical "1"s. Signal DO is at pin 55C. The phase reference signals, S0, S90, S180, and S270 are from the reference circuit.

Table 5-4
PHASE-REFERENCE LAMPS

F-F Output	State of F-F	Lamp
GR(IC1) is:	"0" if DO is "1" @ 90°	DS1 "off"
	"1" if DO is "0" @ 90°	DS1 "on"
GF(IC2) is:	"0" if DO is "1" @ 270°	DS2 "off"
	"1" if DO is "0" @ 270°	DS2 "on"
CR(IC3) is:	"0" if DO is "1" @ 0°	DS3 "off"
	"1" if DO is "0" @ 0°	DS3 "on"
CF (IC4) is:	"0" if DO is "1" @ 180°	DS4 "off"
	"1" if DO is "0" @ 180°	DS4 "on"

File Courtesy of GRWiki.org

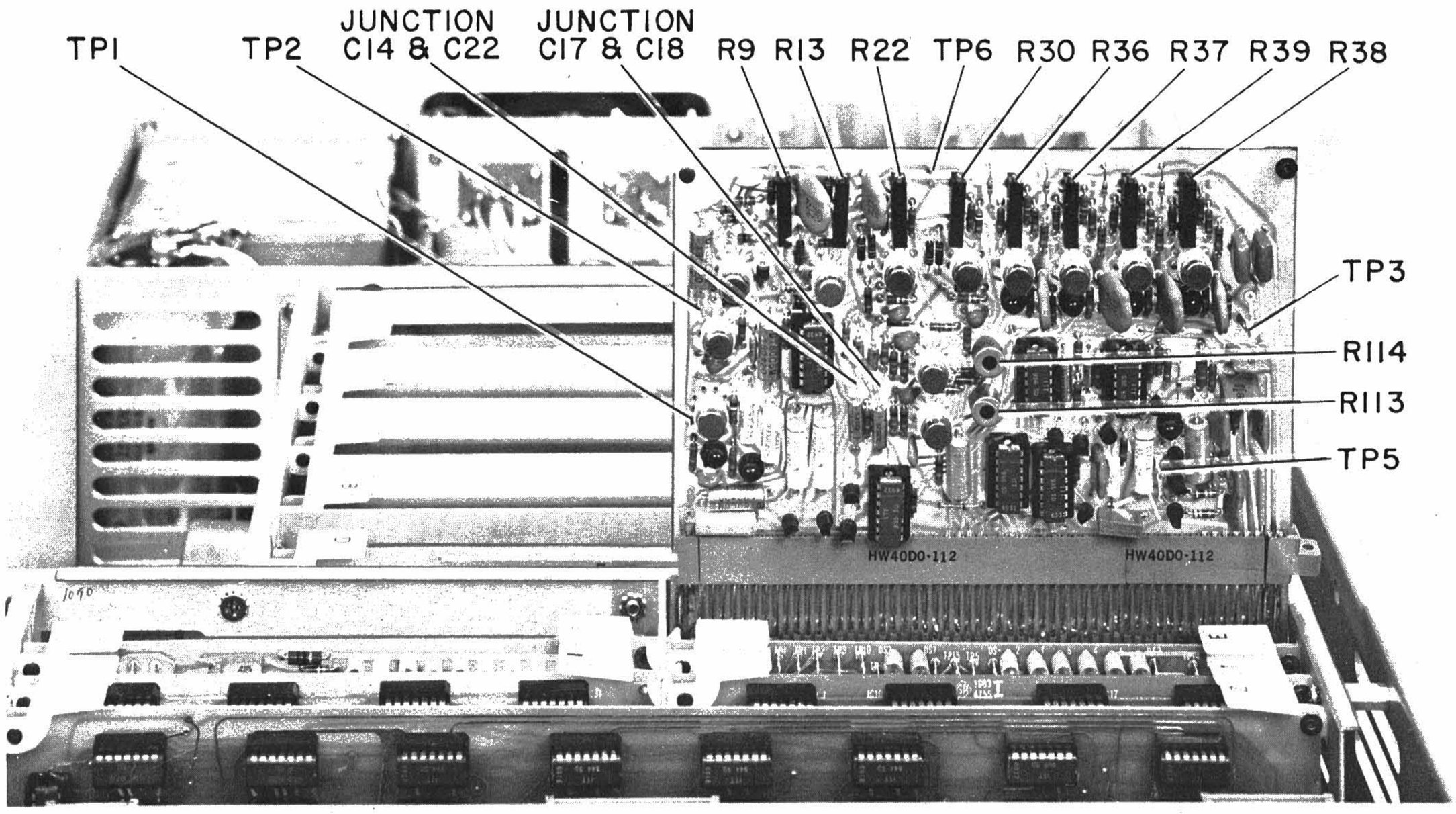

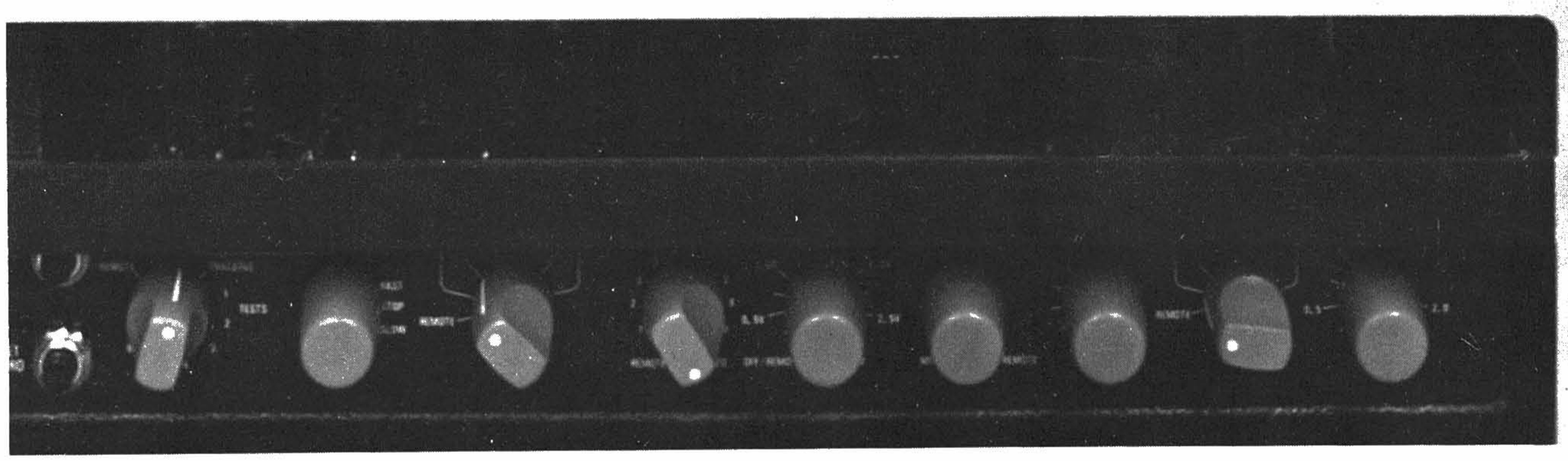

Figure 5-3. S board extended to show test points and adjustments.

File Courtesy of GRWiki.org

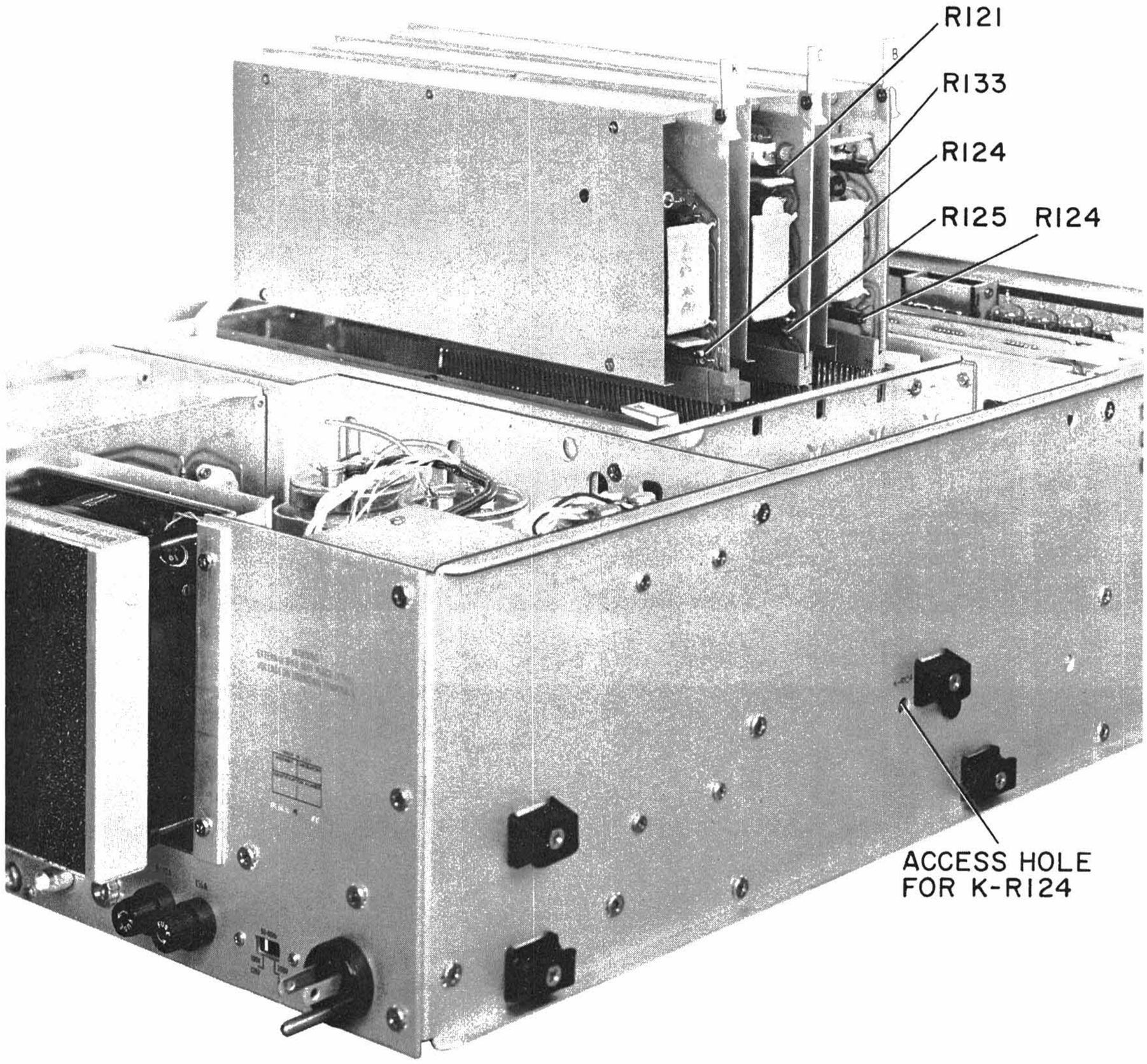

Figure 5-4. K, C, and B boards extended to show adjustments.

File Courtesy of GRWiki.org

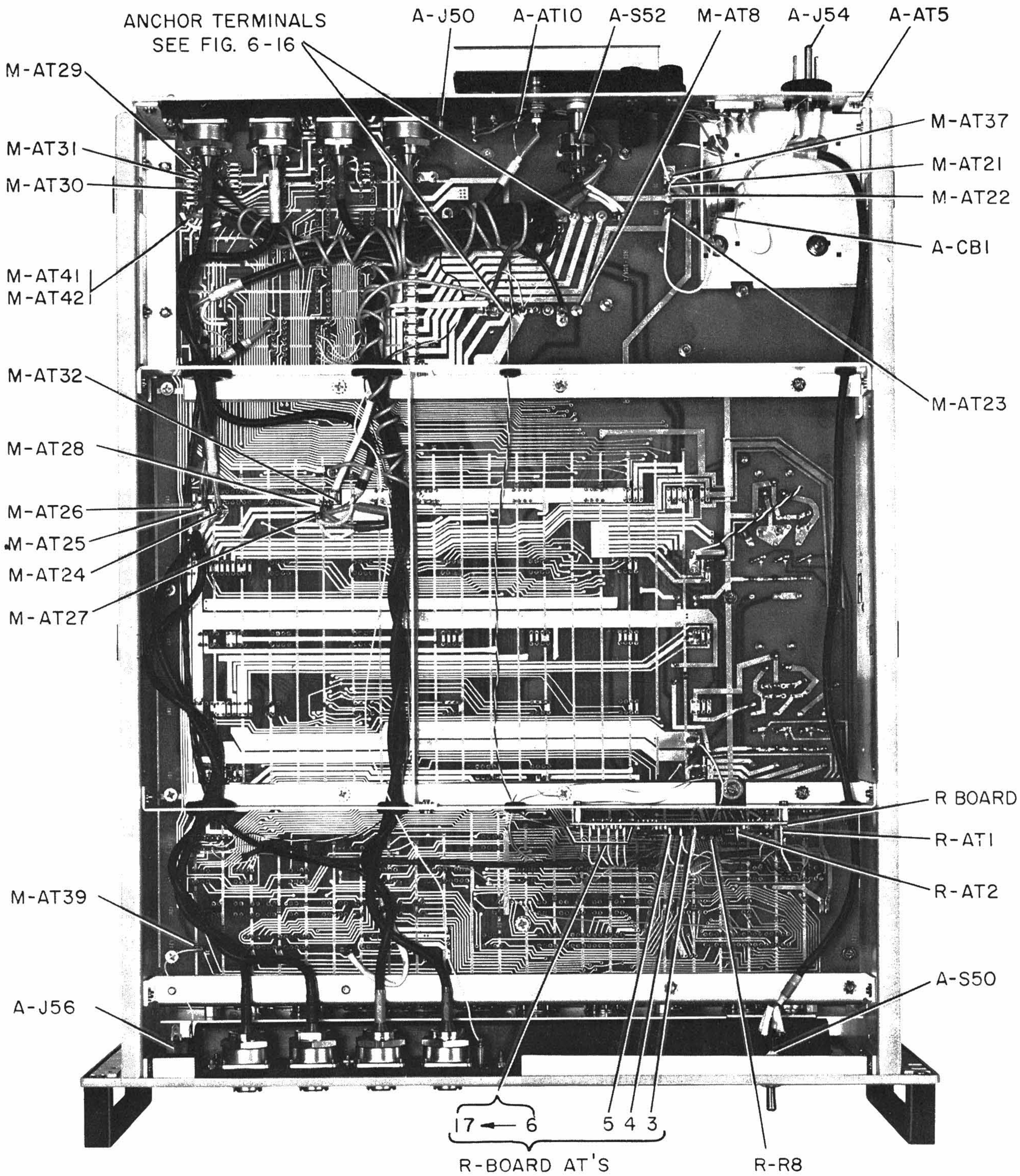

Figure 5-5. Bottom view of mother board.

File Courtesy of GRWiki.org

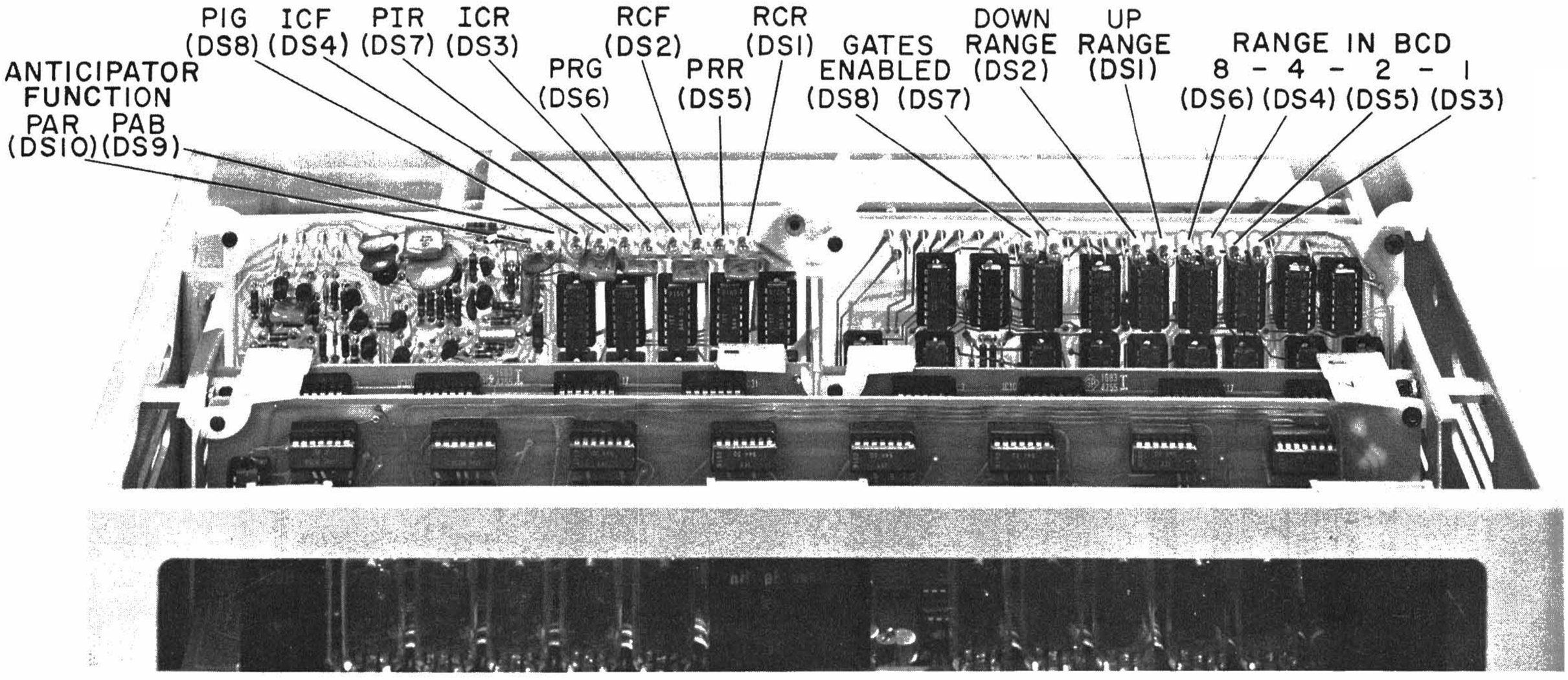

P BOARD

DS1 (RCR)	LIGHTS WHEN SIGNAL DO IS "0" AT 90°.
DS2 (RCF)	LIGHTS WHEN SIGNAL DO IS "0" at 270°.
DS3 (ICR)	LIGHTS WHEN SIGNAL DO IS "0" at 0°.
DS4 (ICF)	LIGHTS WHEN SIGNAL DO IS "0" at 180°.
DS5 (PRR)	LIGHTS WHEN Ω OR D DISPLAY COMMANDED TO COUNT FORWARD.
DS6 (PRG)	LIGHTS WHEN MAIN GATE FOR 2I (R) COUNTER ENABLED FOR PASSING CLOCK PULSES.
DS7 (PIR)	LIGHTS WHEN H OR F DISPLAY COMMANDED TO COUNT FORWARD.
DS8 (PIG)	LIGHTS WHEN MAIN GATE FOR 1I COUNTER ENABLED.
DS9 (PAB) & DS10 (PAR)	ANTICIPATOR-FUNCTION CONTROL SIGNALS. LIGHTS WHEN LOGICAL "0". SEE TABLE IN FIG. 6-4

E BOARD

DS1 & DS2	LIGHT WHEN RANGE CHANGE OR POSSIBLE RANGE CHANGE OCCURS; DS1 INDICATES UP-RANGE; DS2, DOWN-RANGE.
DS3-DS6	INDICATE THE RANGE IN BCD; E.G., DS5 AND DS6 LIGHTED IS RANGE 6 (4 + 2). SEE TABLE 3-1 FOR RANGES.
DS7 & DS8	LIGHT WHEN APPLICABLE MAIN GATE IS PASSING CLOCK PULSES TO THE DISPLAY COUNTERS (I BOARDS).

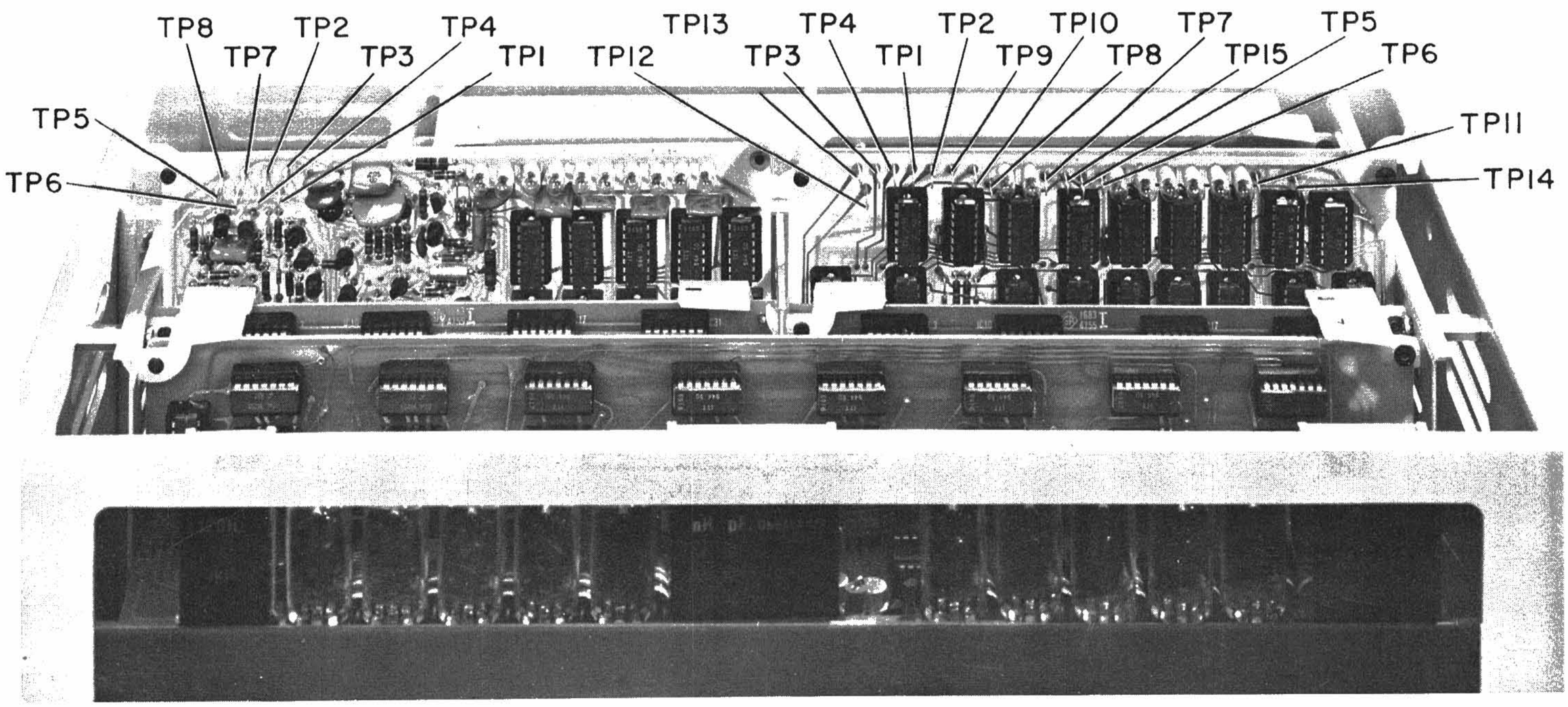

Figure 5-6. P- and E-board lamps and test points.

File Courtesy of GRWiki.org

Table 5-5
LAMP STATUS

GR (DS1)	GF (DS2)	Function Being Performed	RF (DS5)	PRR	RCL (DS6)	PRG
OFF	OFF	Inhibit main gate for 2I (Ω and D) counter clock (close to balance)	ON	"0"	OFF	"0"
OFF	ON	2I counter and display count forward	ON	"0"	ON	"1"
ON	OFF	2I counter and display count reverse	OFF	"1"	ON	"1"
ON	ON	Inhibit main gate for 2I counter clock (balance achieved)	OFF	"1"	OFF	"0"
(DS3)	**(DS4)**		**IF (DS7)**	**PIR**	**ICL (DS8)**	**PIG**
OFF	OFF	Inhibit main gate for 1I (H and F) counter clock (close to balance)	ON	"0"	OFF	"0"
OFF	ON	1I counter and display count forward	ON	"0"	ON	"1"
ON	OFF	1I counter and display count reverse	OFF	"1"	ON	"1"
ON	ON	Inhibit main gate for 1I counter clock (balance achieved)	OFF	"1"	OFF	"0"

These signals set the four direction control flip-flops. The functions to be produced by these flip-flops (IC5-8) are 2I (Ω,D) counter count forward or reverse (DS5), inhibit or enable 2I counter clock (DS6), 1I (H, F) counter count forward or reverse (DS7), and inhibit or enable 1I counter clock (DS8).

Table 5-5 lists all the conditions for the phase detector flip-flops and the direction control flip-flops and their accociated lamps. The board output signals associated with the forward-reverse (PRR, PIR) and inhibit-gate (PRG, PIG) function of the direction control flip-flops are also listed. Note that, when signals PRR and PIR (the forward-reverse signals) are "0", the associated lamps DS5 and DS7 are on, whereas all other lamps are on when the signals is a "1". In this case, the lamps are not tied directly to the signal output but to the complimentary side of the flip-flops producing these signals.

The direction control flip-flops can be checked with the mode switch and the counters and displays made to count forward (F) or reverse (R). Table 5-6 lists the test sequence.

Table 5-6
F-F AND COUNTER TEST

Mode Switch TEST Position		DS5	DS6		DS7	DS8	
1	1I (H,F) Counter	—	OFF	Disable 2I	ON (F)	ON	Enable 1I
2	Check	OFF	OFF	Counter	OFF (R)	ON	Counter
3	2I (Ω, D) Counter	ON (F)	ON	Enable 2I	—	OFF	Disable 1I
4	Check	OFF (R)	ON	Counter	OFF	OFF	Counter

File Courtesy of GRWiki.org

5.10 PERIODIC MAINTENANCE.

The fan filter and cabinet filters should be cleaned at least once a year, or sooner if operating in a dusty environment. The filters can be pulled right out of the holders without unfastening any parts. Wash the filters in soap and water or clean with a vacuum device.

The fan motor requires no lubrication. Keep the instrument cover, panels, controls and connectors and mother board clean and make sure connections to the instrument are clean.

5.11 CHECKS AND ADJUSTMENTS.

5.11.1 General.

The checks in this paragraph are for determining if the following circuit boards are operating properly. In some cases, only the major function of the board is checked; adjustments are included where applicable, so that the boards can be realigned if it appears they are out of adjustment. The checks are given in the order that a complete realignment should be performed or a maintenance check might be performed, if a fault (in all probability an inaccurate measurement that could not be resolved through the operational check in Section 3) could not be recognized immediately and corrected. Refer to Figures 6-3 and 6-4, which show the sequence. The divider accuracy checks can be performed periodically or when a failure of a resistor(s) in the divider weighted conductance network is suspected by the failure of the bridge to balance on only certain values, or counts. This is why this check is listed near the end of the check sequence and not after the power-amplifier check. The accuracy of the instrument and standards, operation of the counters, and range circuit board (E) are checked by the procedures listed in paragraph 5.4. The following checks and adjustments are included in this paragraph:

1. Power supply (V)
2. Oscillator (T)
3. Power amplifier (J)
4. Reference circuit (S)*
5. Detector circuit (D)
6. Reference circuit clock (signal SVCO)*
7. Dividers (K, B* and C*)
8. Leakage circuit (L).

To perform these checks, remove the chassis from the cabinet and turn the chassis on its side, so that the terminals on the mother board are available.

WARNING

Before attempting to check the instrument, refer to Figure 5-1, which points out the places where 250 V is present in the instrument when it is energized.

*Board must be extended for checks and/or adjustments.

Table 5-7
POWER SUPPLY CHECK AND ADJUSTMENT

M-Board Terminal	Adjustment	Voltage
V18E	V-R23	−15 V
V23E	V-R29	+15 V
V5E	–	+5 V
V38E	–	+10 V
MAT11	–	+15 V

5.11.2 Power Supply (V).

To check the power supply:

a. Connect one terminal of a voltmeter to ground (TG, pin V20E on mother board) and the other terminal to the mother board terminals listed in Table 5-7. Check for the voltages listed. Make the adjustment on the V board, as indicated, if the proper reading is not obtained.

NOTE

The supplies are interdependent. R23 must be adjusted first.

Rectifier circuits connected to the transformer secondary also provide + and −8 V for the power amplifier and 250 V for the numerical readout tubes. Be careful of the 250 V when checking an energized instrument. The 250 V is at the rectifier under the transformer shield assembly and at A-R52 and A-R54 at the top of A-C54, mounted at the rear of the instrument on the mother board. The 250 V is fed to AT1 on the H board by the wire running at the side of the chassis. On the H board the voltage is routed to the tubes by means of etched circuitry on the board. Refer to Figure 6-42 for checking these voltages. These need only be checked if the power amplifier fails (±8 V) or numerical readout tubes do not operate (250 V).

WARNING

If the H board is removed from the instrument, the 250-V connection, when removed from AT1, should be touched to ground to remove any possible charge on A-C54.

5.11.3 Oscillator (T).

a. Connect an oscilloscope and frequency counter to mother board terminal T5E.

b. Set the function control to 1 kHz and 120 Hz for any function and observe the readings listed in Table 5-8 for

File Courtesy of GRWiki.org

Table 5-8
OSCILLATOR CHECK
AND ADJUSTMENT

Frequency	Adjustment	Reading
1 kHz	T-R1	1 kHz ±5 Hz
120 Hz	T-R2	120 Hz ±0.6 Hz

each frequency. Make the indicated adjustments if necessary. Observe the instructions in paragraph 2.3, if the line voltage is not 60 Hz.

The 120-Hz frequency should be exactly 120 Hz, since the oscillator is synchronized with 60-Hz line voltage. The amplitude of the voltage should be approximately 1 V rms.

5.11.4 Power Amplifier (J).

This check is for the test voltage (OSC LEVEL) and bias voltage.

a. Connect an oscilloscope to J35E (M Board), set the function switch to CsRs, set the OSC LEVEL control to maximum (2.21, and observe that the level is 6.2 V p-p. The reference line should also be 0 V, since the internal bias is disabled.

b. Adjust R20 on the T board, if necessary, to obtain 2.2 V rms.

c. Ground terminal T38E and adjust R7 on the J board, if necessary, to obtain a 0-V reference level.

d. Vary the OSC LEVEL control and observe that the voltage level changes according to the control markings.

e. Ground terminal J23E and increase the setting of the bias control; observe that the dc level increases and, at the maximum setting, the test signal is riding on a 3-V dc signal, above the 0-V base line.

f. Remove the ground connections.

5.11.5 Detector Circuit (D).

Filter Phasing and Anticipator. This check is for verifying the filter phasing and anticipator operation.

a. Connect a GR Type 1423 Precision Capacitor or equivalent to the 1683 and set it for approximately 1.005 μF; use a three-terminal connection (paragraph 3.1).

b. Connect the oscilloscope (channel 2) to terminal D33E (signal DE) and synchronize and trigger the oscilloscope (channel 2) with signal 0° at terminal S62C.

c. Set the function control to CsD 1 kHz, RANGE switch to 5, and allow the bridge to balance.

d. Vary the capacitor approximately ±1000 pF (10 counts) and observe that the cosine wave shown changes from a positive to negative cosine in the direction of the added or subtracted capacitance. The 0-V crossing of the wave should be at 90° and remain at 90° as the capacitance is varied (or the peak should stay at 180°). Figure 5-7 illustrates the waveforms that should be observed. The

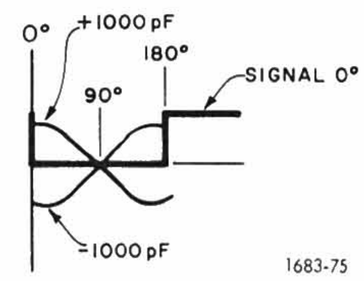

Figure 5-7. Filter Phasing.

waveforms shown are idealized waveforms. If the waveforms do not cross at 90°, adjust D-R41 to obtain the proper phase.

e. Set the RANGE switch to 6, the function switch CsD, 120 Hz, and allow the bridge to balance.

f. Vary the capacitor ±1000 pF and observe the indications specified in step d; adjust D-R42, if necessary, to obtain the proper phasing.

Output. To check and adjust the D-board anticipator, comparator, and squaring circuit:

a. Connect an oscilloscope to pin D41E (signal DO); leave the other channel connected to D33E (signal DE).

b. Connect an oscilloscope or voltmeter to TP2 on the D board and synchronize the oscilloscope with signal 0°.

c. With no capacitor connected to the 1683, ground pins 43C (PSTART) and P33E (PAR). Any signal at the anticipator (D-TP2) should go to 0 V, or at least to less than 1 mV. Adjust D-R30 if necessary, to obtain this reading.

d. Set the function switch to CsD 1 kHz.

e. Connect the capacitor, set it to approximately 1 μF, and allow the bridge to balance on range 5.

f. After the bridge balances, vary the capacitor ±1000 pF and observe that signal DO is a square-wave version of signal DE; that is, the signal going positive or negative at the 0-V crossings of the signal; adjust D-R81 if necessary, to obtain the proper signal.

Signal DEEE. To check the early error signal (DEEE) and its associated detectors:

a. Connect an oscilloscope to TP4 on the D board and set the function switch to CsD 1 kHz.

b. Allow the bridge to balance, using the 1423 Precision Capacitor set to approximately 1 μF. At balance, short-circuit signal DE to ground (use a short-length lead) and observe that the voltage at TP4 is 0 V; adjust R76 if necessary. (Only turn the adjustment to the point where the signal reaches the minimum level; do not turn the adjustment any further.)

c. With signal DE still grounded, connect the oscilloscope to pin D43E or TP3 on the D board (signal DEEE) and observe that the voltage is 0 V (at balance). If not, adjust D-R91 to obtain this reading.

d. Remove the ground from signal DE and reconnect the oscilloscope to TP4. With the capacitor set for 1 μF, allow the bridge to balance. After balance, vary the capacitor by +1000 pF and observe that the voltage increases.

File Courtesy of GRWiki.org

e. Vary the capacitor again by +1000 pF (for a total of +2000 pF) and observe that the voltage increases by approximately the same amount as in step d. If not, adjust R76 until it does. This adjustment is not critical. However, if R76 is adjusted, perform step a again to ensure the voltage at TP4 is 0 V when the bridge is at balance and signal DE is grounded.

If signals DE and DEE are not present, perform the troubleshooting procedure in Table 5-17.

5.7.6 Reference Circuit (S).

This check is to ensure that the proper phase-reference signals (0°, 90°, 180°, and 270°) are produced by the reference circuit.

a. Connect the +CURRENT terminal to the +POTENTIAL terminal using the supplied cable or jumpers with allegator clips and set the function switch to CsD 1 kHz; set the OSC LEVEL control to minimum.

b. Connect the oscilloscope to the mother board terminals listed in Table 5-9 and observe the phase-reference indicated. Synchronize the oscilloscope (channel 1 input) with signal KV (sinewave going negative at 0°, pin S60E) or signal YV (sine wave going positive at 0°, pin Y1C). Trigger the oscilloscope on either of these signals. Note that if signal YV is used for the sync, the signals listed in Table 5-9 will be inverted. Signal KV must be present for the circuit to operate. If it isn't, check the K board, according to the procedure in Table 5-17. If the proper signal is not observed, make the adjustments indicated in Table 5-9.

5.11.7 Reference-Circuit Clock.

The operation of this circuit depends on the proper signals (DE and DEE) being received from the detector board. These signals are checked in the preceding paragraph. The S board must be extended for this check.

a. Remove the J, K, and D boards from the unit and set the SENSITIVITY control to its maximum position.

b. Set the function control to any position and turn on the instrument.

c. Ground inputs KV (S60E), DE (S87E) and DEEE (S88E).

d. Connect an oscilloscope to S-TP7 and observe the voltage is 0 V. If not, adjust R22 to obtain this reading.

e. Connect the oscilloscope to TP3 and observe that the voltage is 0 V. If not, adjust R114 to obtain this reading.

f. Connect the oscilloscope to TP8 and observe that the voltage is 0 V. If not, adjust R30 to obtain this reading.

g. Connect the oscilloscope to TP4 and observe that the voltage is 0 V. If not, adjust R113 to obtain this reading.

h. Connect the oscilloscope to TP's 9 through 12 and observe that the voltage at each test point is 0 V. If not, adjust R36 through R39 respectively, to obtain this reading.

i. Remove the grounds from KV, DE, and DEEE and re-install the circuit boards, making sure they are seated properly.

j. Disconnect the lead from AT1 on the auxiliary comparator board (R board) on the bottom of the mother board (see Figure 5-5) and ground ***the lead***.

NOTE

The clock frequencies can be checked at the same time the next portion of this check is being made. Refer to the procedure in the next para.

k. Connect a low-loss 500- to 800-pF variable air capacitor (a GR Type 1422-D is recommended) to the bridge and set the mode switch VARIABLE MEAS RATE, RANGE switch to range 8, function switch to CsRs 1 kHz, and OSC LEVEL to 2.2.

l. Connect a Tektronix type 547 oscilloscope with a 1A1 dual-trace preamplifier or 1A4 four-trace preamplifier (preferable) to the bridge. Connect channel 1 to signal YC at the Y board (ground the probe to YG) and trigger the oscilloscope with signal YC.

m. Connect channel 2 to connection D33E (signal DE) and display both channels. On the display, extend signal YV to display 1 or 2 cycles.

n. Connect another channel or oscilloscope to connection S109C (signal SBAL).

o. With the bridge set for the VARIABLE MEAS RATE mode and the FAST-STOP-SLOW control set to STOP, press the START switch and allow the bridge to balance.

p. Using the TEST 1, 2, 3, and 4 switch positions, make the error signal (DE) decrease to its minimum level. (The signal will look noisy and have ripple on it.) This is the balance, or null, condition. At the minimum level, note the reactance display reading. Also note that signal SBAL is a logical "1" at balance.

Table 5-9
REFERENCE SIGNALS AND ADJUSTMENTS

M-Board Terminal	Adjustment	Signal
S62C	S-R13	Negative-going at 0° and positive-going at 180°
S63C	—	Negative-going at 180° and positive-going at 0°
S60C	S-R9	Negative-going at 90° and positive-going at 270°
S61C	—	Negative-going at 270° and positive-going at 90°

File Courtesy of GRWiki.org

Table 5-10
SVCO CLOCK FREQUENCY CHECK

Step	Oscilloscope Connections	Function Control	Range	Increase Error Count (Nominal) After Balance by	Observe When Error is Increased	
					Signal	SVCO is
1	S109C & S111C (SBAL) (SVCO)	CsD 1 kHz	8	1-2	SBAL goes to "0". If not, adjust R36.	400-600 pps while error is being balanced.
2		CsD 120 Hz	9	1-2	---	40-60 pps while error is being balanced.
3	S88C & S111C (SUNBAL) (SVCO)	CsD 1 kHz	8	10	SUNBAL goes to "1". If not, adjust R37.	4-6 kpps until error is 10 counts.
4		CsD 120 Hz	9	10	---	400-600 pps until error is 10 counts.
5	S111C (SVCO)	CsD 1 kHz	8	100	---	40-60 kpps until error is 100 counts. If not, adjust S-R38.
6		CsD 120 Hz	9	100	---	4-6 kpps until error is 100 counts.
7	S111C (SVCO)	CsD 1 kHz	8	500	---	400-600 kpps until error is 500 counts.
8	S111C (SVCO)	CsD 120 Hz	9	500	---	40-60 kpps until error is 500 counts.

q. Using mode switch position TEST 1, advance the count by 1 count. SBAL should go to "0" or be on the threshold of going to "0." Using switch position TEST 2, bring the bridge to balance again (the original reading). SBAL should go to "1.

r. Again using the TEST 2 switch position, go back two counts. SBAL should then go to "0." In any event, SBAL should be a "1" for 3 counts, either one forward and two reverse from null (balance) or two forward and one reverse from null (which is 1.5 counts). If this indication is not obtained, adjust R36 until it is obtained.

s. Connect the oscilloscope to S88C (SUNBAL) and repeat the procedure in step r, except SUNBAL should go from "1" to "0" when the display reads from 8 to 12 counts on either side of null (minimum DE signal). Also, note that signal SUNBAL is produced by the auxiliary comparator board, at this time. This output can be checked using the procedure described further on in this paragraph for checking the comparator board.

t. In a similar manner the "error-less-than-100-counts" comparator circuit (IC11) and 500 counts comparator circuit (IC12) can be checked by offsetting the balance by

File Courtesy of GRWiki.org

Table 5-11
LEAKAGE-CURRENT CHECK

Leakage-Current Range	Applied Voltage (V)	Series Resistance (Ω)	Current	Voltage at TP1 (V)	ZLEAK at L2E (V)
1 μA	1	10 M	0.1 μA	0.1 ±10 mV	0.4
1 μA	1	1 M	1.0 μA	1 ±20 mV	4
1 μA	2.5	1 M	2.5 μA	2.5 ±50 mV	10
10 μA	1	1 M	0.1 μA	0.1 ±10 mV	0.4
10 μA	1	100 k	10 μA	1 ±20 mV	4
10 μA	2.5	100 k	25 μA	2.5 ±50 mV	10
100 μA	1	100 k	10 μA	0.1 ± 2 mV	0.4
100 μA	10	100 k	100 μA	1 ±20 mV	4
100 μA	25	100 k	250 μA	2.5 ±50 mV	10
1 mA	10	100 k	100 μA	0.1 ± 2 mV	0.4
1 mA	10	10 k	1 mA	1 ±20 mV	4
1 mA	25	10 k	2.5 mA	2.5 ±50 mV	10
10 mA	10	10 k	1 mA	0.1 ± 2 mV	0.4
10 mA	10	1 k	10 mA	1 ±20 mV	4
10 mA	25	1 k	25 mA	2.5 ±50 mV	10

approximately 100 counts and 500 counts, respectively, and observing that the output of the respective inverter connected to the comparator goes to "0" when the error is less than ***approximately*** 100 counts and 500 counts respectively.

Clock Frequencies. The clock frequencies can be checked using the procedure above for checking the S-board comparator outputs. However, instead of checking the outputs of the comparators for a change in state as the error is increased or decreased, an oscilloscope or counter can be connected to S111C (signal SVCO) and the change in frequency observed as the error is increased or decreased using the mode switch TEST 1-4 switch positions. Table 5-10 lists the clock frequencies for the different amounts of error at both the 1-kHz and 120-Hz test frequencies. Note that a range change is required when checking the 120-Hz.

Auxiliary Comparator Check. Use the same setup that was used for the SBAL comparator in the Output Check. The wire on AT1 of the comparator board (Figure 5-5) should be disconnected from AT1 and ***the wire*** grounded to the chassis. Also, a low-loss 500- to 800-pF variable air capacitor should be connected to the bridge.

a. If a four-trace oscilloscope was used, connect channel 3 to D-TP2 (D3E, anticipator output) and trigger the oscilloscope with this signal. The signal can be observed with a time-base setting of about 20 ms/cm.

b. Connect channel 4 to AT1 on the auxiliary comparator board. Set the function switch to CsD 1 kHz and mode switch to VARIABLE MEAS RATE.

c. Press the SET ZERO switch and then the START switch and allow the bridge to balance. At balance, adjust R8 so that AT1 goes from "0" to "1", then back off slightly just to the point where AT1 goes from "1" to "0" (when the START switch is pressed). Reconnect the wire to AT1. If it is desired to check the board output at AT112 (this signal goes to the S-board SUNBAL output) connect the oscilloscope to AT7 and observe that the signal goes from "1" to "0" just before balance (approximately within 8 to 12 counts of error).

5.11.8 Leakage-Current.

a. With no unknown connected to the terminals, set the LEAKAGE controls to the 1-μA range and the variable control ccw to minimum setting.

b. Ground terminal L24E ($\overline{\text{PLEAKOFF}}$), connect an oscilloscope to L-TP1, turn on the instrument, and observe that the voltage is 0 V ±1 mV. If not, adjust L-R6 to obtain this reading.

c. Set the LEAKAGE control to the 10-μA range and observe that the voltage at TP1 is 0 V. If not, adjust L-R29. Repeat steps b. and c.

d. Set the LEAKAGE control back to 1 μA.

e. Connect a GR Type 1434-P Decade Resistor, or equivalent, in series with a 0 - 10-V power supply to the −CURRENT terminal.

f. Connect a voltmeter to terminal L2E and an oscilloscope or voltmeter to L-TP1 and L-TP3.

g. Set the decade resistor to 10 MΩ and the external power supply to 1 V, so that there is a 0.1-μA input to the L board; the voltage at TP1 should be 0.1 V ±10 mV.

h. Initiate a leakage-current measurement at a very slow rate and turn-up power supply voltage, so that the voltage at terminal L2E is 0.4 V; observe that TP2 goes to "0" when the 0.4-V level is reached. If not, adjust L-R14 so that it does.

File Courtesy of GRWiki.org

Table 5-12
K-DIVIDER CHECK

Reactance Display Reading	Divider Network "0" Inputs (Schematic Fig. 6-14.)	
	Input*	Pin No.
1000.0 nF	1$\overline{\text{IQ0}}$	79E
0800.0 nF	1$\overline{\text{IQ1}}$	64C
0400.0 nF	1$\overline{\text{IQ2}}$	65C
0200.0 nF	1$\overline{\text{IQ3}}$	77C
0100.0 nF	1$\overline{\text{IQ4}}$	78C
0080.0 nF	1$\overline{\text{IQ5}}$	48C
0040.0 nF	1$\overline{\text{IQ6}}$	49C
0020.0 nF	1$\overline{\text{IQ7}}$	62C
0010.0 nF	1$\overline{\text{IQ8}}$	63C
0008.0 nF	1$\overline{\text{IQ9}}$	32C
0004.0 nF	1$\overline{\text{IQ10}}$	33C
0002.0 nF	1$\overline{\text{IQ11}}$	46C
0001.0 nF	1$\overline{\text{IQ12}}$	47C
0000.8 nF	1$\overline{\text{IQ13}}$	16C
0000.4 nF	1$\overline{\text{IQ14}}$	17C
0000.2 nF	1$\overline{\text{IQ15}}$	30C
0000.1 nF	1$\overline{\text{IQ16}}$	31C

*To obtain a "0" for the lower-value inputs, the display must read exactly as indicated in the "Reactance Display" column (no error). Adjust the capacitor or use the mode switch TEST 1 or 2 switch positions to set the display for the exact reading, if necessary. Using the same mode switch positions, offset the reading and observe the input goes back to "1". (A digit 4 must be offset to a 6 or 3.)

i. Perform the same operation for all the ranges listed in Table 5-11. Set the decade resistor and the power supply to obtain the current listed and the resultant voltage at TP1. For the first two ranges, increase the LEAKAGE variable control (ZLEAK) during the measurement to the voltage indicated and observe that TP2 goes to "0" at that point and that the GO indicator lights. This should only be necessary for the first two ranges; adjust R14 if necessary. Make the measurement at TP1 for all ranges to verify proper operation at each range if need be. ZLEAK need not be applied for these remaining checks.

5.11.9 Divider Checks.

General. Perform the following checks when trouble is suspected in any of the divider boards by reason of the failure of the bridge to balance on a certain value or values (indication of the failure of a part of the board ladder network) or the failure to balance a particular type component (resistor, capacitor, etc.).

CAUTION

Do not bend a resistor card on divider board when testing or repairing the board.

K-Divider Board. This board is associated with reactance measurements. To check the ladder network linearity:

a. Connect one channel of a dual-trace oscilloscope to the K-divider board output (KM), set the function switch to CsD 1 kHz, and RANGE switch to 7.

b. Connect a 10,000-pF capacitor to the bridge terminals.

c. Press the SET ZERO switch and observe that displays read all zeros. If not, a possible fault exists in the counter circuits or display circuitry.

d. With the oscilloscope set for high sensitivity, use the mode switch TEST 1 position to count the reactance display up (forward) to a maximum count of 19999 and TEST 2 switch position to count the display back down (reverse) to all zeros. When doing this, the oscilloscope sensitivity will have to be changed accordingly to fully observe the signal. Observe that the signal increases and decreases linearly as the display is counted forward and reverse.

If any nonlinearity is encountered, refer to Table 5-12. Using the mode switch TEST 1 and 2 positions, the display can be set to any of the readings listed in the "Reactance Display" column, to verify that signals are present at all the

File Courtesy of GRWiki.org

Table 5-13
B-DIVIDER CHECK

Resistance Display Reading	B-Divider Network "0" Inputs (Schematic, Figure 6-5.)	
	Input*	Pin No.
1000.0 Ω	$2\overline{IQ0}$	81E
0800.0 Ω	$2\overline{IQ1}$	64E
0400.0 Ω	$2\overline{IQ2}$	65E
0200.0 Ω	$2\overline{IQ3}$	78E
0100.0 Ω	$2\overline{IQ4}$	79E
0080.0 Ω	$2\overline{IQ5}$	48E
0040.0 Ω	$2\overline{IQ6}$	49E
0020.0 Ω	$2\overline{IQ7}$	62E
0010.0 Ω	$2\overline{IQ8}$	63E
0008.0 Ω	$2\overline{IQ9}$	32E
0004.0 Ω	$2\overline{IQ10}$	33E
0002.0 Ω	$2\overline{IQ11}$	46E
0001.0 Ω	$2\overline{IQ12}$	47E
0000.8 Ω	$2\overline{IQ13}$	16E
0000.4 Ω	$2\overline{IQ14}$	17E
0000.2 Ω	$2\overline{IQ15}$	30E
0000.1 Ω	$2\overline{IQ16}$	31E

*Refer to the footnote under Table 5-12.

Table 5-14
C-DIVIDER CHECK

Reactance Display Reading	C-Divider Network 9-V Inputs (Schematic, Fig. 6-6)	
	Input	Pin No.
100.00 nF	KS0	79E
080.00 nF	KS1	65E
040.00 nF	KS2	64E
020.00 nF	KS3	77E
010.00 nF	KS4	78E
008.00 nF	KS5	49E
004.00 nF	KS6	48E
002.00 nF	KS7	62E
001.00 nF	KS8	63E
000.80 nF	KS9	33E
000.40 nF	KS10	32E
000.20 nF	KS11	46E
000.10 nF	KS12	47E
000.08 nF	KS13	17E
000.04 nF	KS14	16E
000.02 nF	KS15	30E
000.01 nF	KS16	31E

File Courtesy of GRWiki.org

inputs or at the particular segment of the matrix and ladder network in which nonlinearity is indicated. The schematic shows the portion of the matrix and ladder network and related input signals and display digits. Also refer to para. 4.4.5 if necessary. If the proper input is present, a failure has probably occured in one of the areas associated with the input switching signal. If the proper signal is not present, a failure has probably occured in the 1I counter or interconnecting wiring. If the displays work properly, the fault is probably in the interconnecting wiring.

If no reactance display reading occurs or trouble is suspected with the K divider, perform the following to check the board's output amplifier and board gain:

a. Connect one channel of an oscilloscope to the K-divider board output (KM) and the other channel to the input (YV).

b. Set the function switch to CsD 1 kHz and use the mode switch TEST 1 and 2 switch positions to make the reactance display read 10000.

c. Connect a 10,000-pF capacitor to the bridge terminals and observe on the oscilloscope that the output signal is of the same amplitude as the input signal. Note that the gain of the board is 2; therefore, when the display is set to 10000, the gain is one-half, or 1.

If the above fault indications are observed the board must be replaced or repaired. ***Do not attempt to make an adjustment on any divider boards.*** This should be done by a GR Service Facility.

B-Divider Check. Check the B divider in a similar manner as that described for the K board. However, set the function switch to LsRs 1 kHz and connect a low-value resistor to the bridge terminals. Use Table 5-13 to check inputs to the board matrix and ladder networks, if nonlinearities are encountered and it is desired to verify that signals are present at the inputs to these networks. If all the signals are present, a fault probably exists in the board network. If a signal is missing, check the appropriate 2I counter outputs and interconnecting wiring.

To check the board's output amplifier and board gain, set the resistance display to 10000 using the mode TEST 3 and 4 switch positions. (The gain of the board is approximately 2.) Refer to the schematic and use a similar test as that described for the K divider.

C-Divider Board. Check this board in a similar manner as that described for the K divider, except connect a 10,000-pF capacitor to the bridge terminals and set the function switch to CsRs 1 kHz and RANGE switch to 7.

Use the mode switch TEST 1 and 2 positions to count the reactance display forward to 19999 and then back down to 00000. If nonlinearity is encountered, use the display settings listed in Table 5-14 to see if inputs to the board matrix and ladder networks from the K-divider board are present. To check the inputs, the display must read the exact count specified in the "Reactance Display" column. When the display reads the exact count, approximately 9 V will be at the specified input-pin connection. After obtaining the exact reading, offset the reading using the TEST 1 and 2 mode switch positions and observe that the voltage goes to approximately −13 V when the display changes.

To check the board's output amplifier and board gain, use a similar method as that described for the K board. However, set the reactance display to 19999. Note that this display setting is different from the ones required for checking the other boards. Check the board by setting the function control to both the CsRs 1 kHz and CsRs 120 Hz and check that the gain is 0.628 for 1 kHz and 0.754 for 120 Hz, as compared to the input signal at input YC.

5.12 TROUBLE ANALYSIS.

5.12.1 General.

Procedures are included here to isolate a fault to an etched-circuit board. Once the fault has been isolated to a board or boards, a replacement can be obtained quickly by using the procedure specified in paragraph 5.3. If it is desired to isolate a fault to a part on the board and then repair the board, the information in the theory description of the board in Section 4, waveforms and voltage levels on the drawings in Section 6, and the Parts List for the board, allow isolation to a part on the board and repair of the board.

5.12.2 Troubleshooting Aids and Data.

The block diagrams of each circuit board shown in Section 4 are very useful in isolating a fault to a board, if any trouble is encountered during troubleshooting. Figure 6-4, the functional flow diagram, and the lamps on the P and E boards are also useful for troubleshooting. (Refer to paragraph 5-9.)

In most cases when an IC fails, its output voltage will not be 0 V or +5 V but will most likely be somewhere around 2 V. When checking signals and this voltage level is encountered, it will probably indicate that an IC output connected to, or used to produce the signal, has failed. Also, relays are more likely to fail than other circuit parts. A normal logical "1" level is +3.5 V to +5 V and "0" levels is approximately ground.

Table 5-15 lists the most probable faults that can occur in the instrument, the probable cause, and the procedure to

File Courtesy of GRWiki.org

remedy the fault. All possible faults are not included, but any other possible faults that could occur would usually be associated with a circuit board. Since each board has a certain function, the area of the fault can be isolated quickly.

For a catastrophic failure, such as the bridge does not balance but the displays are lit, the best method of troubleshooting would be to first use the mode switch TEST positions to exercise the counters and displays, isolating any possible fault to these circuits. The next step, if these circuits are operating properly, is to use the lamps on the P board to isolate faults to that board. If this board is operating properly the next check would be at the D board output to see if the proper signals are present. If they are not, the fault is in the D board or circuit boards preceding it. If the signal is present, the fault must be in the S board. Tables 5-16 and 5-17 give the procedures to follow if this type of fault has occurred.

Before attempting to troubleshoot, check that the circuit boards are properly seated and secured in their sockets. Also check for bent pins on the bottom of the mother board that may be touching each other.

5.13 SERVICING ETCHED-CIRCUIT BOARDS.

It is recommended that etched-circuit boards be replaced, when found to be faulty. (Refer to paragraph 5.3.)

File Courtesy of GRWiki.org

Table 5-15
FAULT INDICATIONS, CAUSES, AND REMEDY

Fault Indication	Probable Cause	Remedy
Displays light but do not count.	Circuit board failure.	Refer to paragraph 5.12.2 and Table 5-16.
Displays do not light.	Power supplies.	Refer to paragraph 5.11.2.
Display(s) count but do not change range.	Range board (E) faulty or counter board(s) faulty (do not produce proper range-change signals for E board).	Refer to Table 5-19.
Displays only range up or down to a certain range or skip a range in the automatic ranging mode.	E-board range counter if range inhibited. Range counter, Z-board range matrix, or numerical readout tube(s) if range is skipped.	Refer to Table 5-19. If the range counter or its decoder is faulty, however, there should be an error of a factor of about eight, since a Y-board relay(s) will not be energized.
Slight error is observed consistently for different unknowns.	For dissipation factor, R133 on B-divider board out of adjustment.	Factory adjustment. Do not adjust.
	For resistance, R125 and/or R121 on C-divider board out of adjustment.	Factory adjustment. Do not adjust.
	For capacitance at 1 kHz, compensation standards M-C12-C14.	Make sure that there is no stray capacitance present according to para. 3.13. Then adjust M-C14, using step 1 of the procedure in Table 3-3. M-C11 to C13 are adjustable by substituting capacitors.
	For capacitance at 120 Hz, compensation standards M-C10 or M-C11.	Make sure that there is no stray capacitance present according to paragraph 3.13. Then adjust M-C10 and/or C11 according to step 1 of Table 3-3. M-C10 and C11 are adjustable only by substituting different value capacitors.
Large error is observed consistently for different unknowns.	Reference levels produced by signals DE and DEEE at S board not correct.	Refer to para. 5.11.5 (parts 2 and 3) and 5.11.7.
Large error but in multiple of approximately eight; e.g., 0.8, 8, 80, 800, etc.	Y-board range relay(s) not activated when in the automatic ranging mode.	Check that a "0" is at the appropriate pin input (see Figure 6-26) of the Y board. If the proper signal is present, the Y board is faulty. If not present, check the output of the E-board range counter to see if the counter and/or its decoders are faulty.
Displays stop counting and UNBALANCED lamp is lit.	Anticipator generator on D board not functioning properly or display counter not functioning properly.	Check the operation of the counters, using the mode switch TEST positions. Check the anticipator generator according to paragraph 5.11.5, part 2. Use Table 5-20 to troubleshoot the anticipator if necessary.

File Courtesy of GRWiki.org

Table 5-15 (Cont)
FAULT INDICATIONS, CAUSES, AND REMEDY

Fault Indication	Probable Cause	Remedy
Error is observed for some unknowns of the same type and value or other unknowns of the same type but different values. The error observed will usually be in the form of the bridge "hunting" to either side of a numeral or between a digit or digits; for example, between the units and tens or between thousands, tens, units, etc.	Faulty component in any arm of a divider board or failure in signal line from counter. A catastrophic failure will probably result in the "hunting" effect. Other failures may result in errors only for certain values of unknowns.	Refer to paragraph 5.11.9 and Table 5-12 for CsD, Table 5-14 for CsRs and Table 5-13 for LsRs. If just checking for a faulty part, the full check in the table need not be performed. Check the digit or digits affected. If the counter signals are present, the board is faulty. If the signal(s) is not present, trace the signal to locate the fault.
Bridge balances slowly.	Phase-reference signals produced by S board are out of phase.	Refer to para. 5.11.6.
	Anticipator-generator on D board not turned on (stays at 0 V) or generator driver (P board) not operating.	Refer to paragraph 5.11.5. If the generator is not operating properly, refer to Table 5-20.
	Possibility SVCO clock signal is on lowest frequency.	Refer to Figure 6-22 and Table 5-10; check that clock frequencies are as listed.
Bridge down-ranges only or gives down-range indication when it should not.	Oscillator may not be turned off during a range change. This may cause the amplifiers on the Y board to saturate, producing signal $Y\overline{DOWN}$, which causes the range circuit to range downwards when the Y-board amplifiers are saturated. $Y\overline{DOWN}$ may stay "0", inhibiting the upranging of the bridge.	Check signal $Y\overline{DOWN}$ does not stay "0" as bridge down-ranges. If it does, check that signal $E\overline{CHANGE}$ turns off the oscillator (Fig. 6-23). If so, and $Y\overline{DOWN}$ remains "0", Y board may be faulty or there may be a wiring fault. If $Y\overline{DOWN}$ is allright, signals $1\overline{IOR}$ or $2\overline{IOR}$ may be causing the bridge to down-range, or the E-board range circuit may be faulty. Check these according to Table 5-16, step 2, "Signal Present."
Bridge persistently up-ranges.		Counter signals I00 or $I\overline{9F}$ may have failed or range circuit is not operating properly. Check according to Table 5-19.
Groups of digits or numerals blank out.	H-board circuits or wiring between counters and displays.	Refer to Figures 6-9 to 6-12. Faulty circuits can be determined by relating the BCD lines to the H-board circuitry.
Rate between measurements can't be varied or can't be varied properly.	VARIABLE MEAS. RATE control and/or wiring, P-board VMR generator, or VMR generator rate not slowed (for leakage-current) or turned off by 'N' and 'B' outputs of F-F E-IC28.	Check VARIABLE MEAS. RATE switch and wiring and VMR generator.
Dual or shadow numerals on readout tubes.	Defective IC decoders on H board.	Replace board or faulty IC's.

File Courtesy of GRWiki.org

Table 5-16
TROUBLESHOOTING – DISPLAYS LIGHT BUT DO NOT COUNT

Step	Procedure	Signal Present	Signal Not Present
1	Make sure the SENSITIVITY control is not turned to the MIN position.		NOTE If the displays count up to a certain point, can be reset to all zeros, or just some displays reset to zero, the counter board is probably faulty.
2	Check that signal $\overline{PRIG}$ at P-TP5 goes to "1" after the start is initiated for a balance (not TEST) operation or signal goes to "0" for 15 ms after start, then goes to "1".	Proceed to step 3.	Indicates that start circuit on P board may not be functioning properly. Proceed to step 7.
3	Use the mode switch TEST positions (Table 5-6) to check circuitry. Check that P-board lamps DS5-DS8 light in the sequence listed in Table 5-6.	If the lamps light and the displays count, proceed to step 4. If the lamps light but the displays do not count, proceed to step 5.	If the lamps do not light, check P-board output signals PRR, $\overline{PRG}$, PIR, and $\overline{PIG}$, as listed in Table 5-5 for the various mode TEST positions. If the proper signals are not present, the P board is faulty. If present, a lamp has failed; therefore, proceed to step 4.
4	Connect a capacitor or resistor to the bridge and allow the bridge to balance slowly. Observe that P-board lamps DS1-DS4 flash or glow.	If the lamps flash or glow, check that signal SVCO is present at (P29E) during a balance operation and that signal PCLK12 is present at P-TP3. (See Fig. 6-32.) If SVCO is present and PCLK is not, the P board is probably faulty. If SVCO is not present, check (para. 5.11.5) signals DE and DEEE. If the signals are not present, perform the procedure in Table 5-17. If the signals are present, check their inputs to the S board. Also, check that signal KV is present at the input. If present, check the S board according to para. 5.11.6, and 5.11.7 to make sure that the S board is the faulty board.	Check that signal DO is present at the D-board output. Refer to para. 5.11.5. If not, perform the procedure in Table 5-17. If present, check signals S0, S180, S90, and S270 according to para. 5.11.6. If these signals are not present, check signals DE, DEEE (para 5.11.5) and signal KV. If these are present at the input of the S board, the S board is faulty. If not present, check the D board outputs (para. 5.11.5); then, if necessary, perform the procedure in Table 5-17, to isolate the fault to the D board or the boards preceding the D board in the signal flow path. (See Figure 6-3.)
5	Using the mode switch TEST positions, observe that E-board lamps DS7 (1I gate) and DS8 (2I gate) light to indicate the gates are passing clock signals to the counters. (Also verify at E-TP12 and E-TP13 if desired.)	Check that clock signals EICLK and ERCLK at 1I52E and 2I111E, respectively, are present during a TEST. If not, check wiring and connections. If present, there is a possibility that signals PRR and PIR are not present. Check these according to step 3, "Signal Not Present." Check wiring and connections if these signals are present at P board. If all these signals are present, check the counter outputs. Refer to Figures 6-9 to 6-12. One way to check the outputs is to allow the counters to count to 19999. If the mode switch is held to positions 1 and 3 while the 1683 is in a fixed range (1-9), the counter should count to 19999, if operating properly. Check that the BCD 8 and 1 (8 + 1 =9) outputs (see Figure 6-11) are "1", and that the 4 and 2 outputs are "0". Start with the "units" decade. If the signals are not present, the counter board must be faulty. If the signals are present there must be a poor board connection, since at least one of the signals should reach the displays. Trace signals through the Z board to the H board if necessary.	Use the mode switch TEST positions and check that a clock signal is present at the P board output. Use E-TP3 or, even better, use E28C. If the clock signal is present, check that signal PRIG at P-TP5 is a "1" when the mode switch is set to the TEST position. If present, proceed to step 6. If not present, check at P-TP1 that the level goes to "1" when the mode switch is set to TEST or TRACKING. If not, check the mode switch and wiring (Fig. 6-27). If P-TP1 goes to "1", the P board must be faulty. Before replacing the board, however, check that signal SVCO is present at P29E in the SINGLE MEAS mode. If TP1 does not go to "1", check that signals ZT1-ZT5 are all "1" when ***not*** in TEST or TRACKING modes. NOTE $\overline{PRIG}$ (EI6E) is connected to Q-board STOP input and N-board INHIBIT input. Check circuits if boards are installed in 1683.
6	Check that signal $\overline{ECHANGE}$ at E-TP8 is a "1" in the fixed-range mode.	Check that main-gate input signals $1I\overline{9F}$, $1I\overline{0R}$ or $2I\overline{9F}$ and $2I\overline{0R}$ (as applicable) are "1" if the display ***does not*** read 19999 and counting forward and all zeros are counting in the reverse direction. Verify with the mode switch TEST positions, in the fixed-range mode. When the control is set to count down to 00000, the signal $I\overline{0R}$ should go to "0" when this count is reached. Then, when the switch is set to count forward, the signal(s) should go to "1". Similarly, the signal $\overline{9F}$ goes to "0" when the count reaches 19999 and to "1" when the control is then set for a reverse count (i.e., 19999 down to 00000). If these signals are not present at the P board, check that they are at the counter (I) boards (see note). If they are, replace the P board. If the signals are at the P board, check that signal $\overline{PLEAKOFF}$ (E79E) is "0" and signals $\overline{PIG}$ (E68E) and $\overline{PRG}$ (E72E) are "1" when the applicable gate is enabled with the mode switch TEST position (TEST 1 and 2, $\overline{PIG}$; TEST 3 and 4, $\overline{PRG}$). If these signals are present and the gates do not operate, replace the E board.	E-board range delay circuit is faulty; the "0" $\overline{ECHANGE}$ signal prevents the main gates from operating. NOTE $1I\overline{9F}$ is at E-TP1 $1I\overline{0R}$ is at E-TP2 $2I\overline{9F}$ is at E-TP4 $2I\overline{0R}$ is at E-TP3 RANGE lamp lights when the counter is 19999 and forward or 00000 and reverse for both displays. This indicates that the counters are producing the proper range change signals.

File Courtesy of GRWiki.org

Table 5-16 (Cont)
TROUBLESHOOTING – DISPLAYS LIGHT BUT DO NOT COUNT

Step	Procedure	Signal Present	Signal Not Present
7	Check that P-TP5 goes to "1" when mode switch is set to TEST or TRACKING.	Proceed to step 8.	Check that signal $\overline{\text{QSING1}}$ (P9E) is "1". If not, check +5 V and Q board, if installed. Check that signal LNG (P23C) is "1". If these signals are present, the E-board start circuit must be faulty. All inputs to gate E-IC27 should be "1" before a START operation. This gate may prevent P-TP5 from going to "1".
8	Check that the following applicable start signal goes to "0" when a start is initiated: Front Panel or Test Fixture, $\overline{\text{ZSTART}}$ (P2E) Via N board, $\overline{\text{NSING2}}$ (P3E) Via Q board, $\overline{\text{QSING1}}$ (P9E) $\overline{\text{NSING2}}$ "0" > 20 ms QSING1 "0" > 0.5 ms, < 50 ms The $\overline{\text{NSING2}}$ and $\overline{\text{QSING1}}$ start-pulse inputs must be as specified above.	P-board start circuit, balance circuit, and/or anti-bounce switch (used for front-panel- and test fixture-iniated starts only). This fault can be isolated by grounding $\overline{\text{QSING1}}$ (P9E) for the specified time or LNG (P23C) and observing that the instrument starts.) The balance flip-flop is set by the start signal and reset by EBAL when it goes to "1". It will not reset if $\overline{\text{ECHANGE}}$ is "0". However, if it remains in the set state, signal $\overline{\text{PRIG}}$ will be a "1". When reset, only the start pulse is required to set the flip-flop. The other signals can be "0" or "1" if it is reset. If not reset, $\overline{\text{PABORT}}$ (P3C) will be "0".	Check that the start signal(s) is present at the Z-board (and Q and N boards, if applicable). Check wiring and switches. (Fig. 6-27) Use the Signal Run List and Tables 4-10 and 4-12 to trace the signals.

File Courtesy of GRWiki.org

Table 5-17
TROUBLESHOOTING – D BOARD
OR PRECEDING BOARD(S)
FAULTY

Step*	Signal Check	Measurement Terminal	Signal Present	Signal Not Present
1	MD (sine or cosine wave)	D1E (To observe MD, the error must be large and a balance initiated. Signal is observed only during the balance operation. A 10,000-pF capacitor balanced on range 3 will produce an observable signal.)	Replace D board if no output is present.	Proceed to Step 2.
2	JHC (sine or cosine wave),	J35E	Proceed to Step 3.	Check Oscillator and power supply according to para. 5.11.3 and 5.11.2; replace faulty board if necessary.
3	YC (sine wave)	Y4E, 4C	Proceed to Step 4.	Check input LC (Y70E; 70C). If present, replace Y board.
	YV (sine or cosine wave)	YIE, 1C	Proceed to Step 4.	Check input HV (Y43E). If signal is present, replace Y board.
4	KM (negative cosine wave)	K3E, 4E	Proceed to Step 7.	Check signal KV, a sine wave (K91E). If present, replace K board.
5	BM (negative sine wave)	B3E, 4E	Proceed to Step 7.	Check input YC (B89E, 90E) if CsD or LsRs is being measured or CC (B85F, 86E) if CsRs is being measured. If these signals are present and switching signals are present (see note), replace the B board. If CC is not present, proceed to step 6.
	NOTE If inputs to the divider board are present but there is no output, check that divider network switching inputs (IQ or KS signals) are present before replacing the board. These signals allow the signal to pass through the board. Tables 5-12 thru 5-14 list the type of signal that should be present for various readings of any function. The information on the schematics will allow the BCD signal input to be deduced for any reading. Check interface wiring if switching signals are not present.			
6	YC (sine wave)	C89E, 90E	Check output CC. If not present, replace C board. (See note above.)	Check connections and wiring.

*Connect an unknown to the instrument and allow the bridge to balance for each check.

File Courtesy of GRWiki.org

Table 5-17 (Cont)
TROUBLESHOOTING – D BOARD
OR PRECEDING BOARD(S)
FAULTY

Step	Signal Check	Measurement Terminal	Signal Present	Signal Not Present
7	Signals at standards. (Refer to Figures 6-6 and 5-1.)	Check signal path through mother board for signals YC (CsD measurement only), KM, and BM. Figure 6-16 lists the states of the switching signals (ZS2, ZS3) for each measurement function and the state of each relay for each measurement. To energize a relay, the voltage at the base of a transistor should be 0.6 V.	———	Replace the defective part(s) that block the signal. (Refer to the mother board parts list.) Make sure other parts in the signal path are not defective.

Table 5-18
TROUBLESHOOTING – NO REBALANCE IN VMR MODE

Step	Procedure	Signal Present	Signal Not Present
1	Check that pulses are present at P-TP4 after the bridge balances. (Initiate another balance with START switch).	Proceed to Step 3. NOTE Check that no range change is required.	Proceed to Step 2.
2	Set the mode switch to either TEST or TRACK and observe that pulses are present.	Check that signal ZVAR (P22C) goes to "0" when mode switch is set to VARIABLE MEAS RATE. If not, check wiring and switch. If it goes to "0", proceed to Step 3.	Check that signal N$\overline{\text{INH}}$ is "1" (P15E). If not, trace the signal to locate the fault. If a "1", the PVMR generator must be faulty.
3	Check signal E$\overline{\text{CHANGE}}$ (P6C) is "1".	Proceed to Step 4. NOTE If signals E$\overline{\text{CHANGE}}$ or EBAL stay "0", the balance flip-flop will not reset and turn on the PVMR generator, to producing a start pulse in the PVMR mode.	Check wiring and E board. If not connections, E board must be faulty.
4	Check signal EBAL (P7C) is "1" at balance.	Portion of output of PVMR generator or input to start circuit on E board faulty.	Check that there is no up-range indication at the E board (E-DS1 not lit). If there is and no range change is required, the E board or counter(s) must be faulty. Check that signal EBAL (E95C) is a "1". If not, check interface with S board and S-board interface with circuit board (R-board, Figure 6-21) mounted on the bottom of the mother board. Para. 4.4.9 describes the operation of this circuit board.

File Courtesy of GRWiki.org

Table 5-19
TROUBLESHOOTING – DISPLAYS COUNT
BUT DO NOT CHANGE RANGE
IN AUTOMATIC MODE

Step	Procedure	Signal Present	Signal Not Present
1	Observe lamps DS1 and DS2 on the E board. Perform the ranging check in para. 5.4.4 and note that lamp DS1 lights when the instrument up-ranges and that DS2 lights when it down-ranges.	If the lamps light, all the range-change signals are present to initiate a change of range. Put the instrument in AUTO range and refer to the ranging procedure in paragraph 5.4.4. Starting at the lowest range, range through all the ranges and observe that the E-board range counter BCD lamps (Figure 5-6) light to indicate each range. For example: DS3 – indicates range 1 DS5 – range 2 DS5 & 3 – range 3 DS4 – range 4 DS4 & 3 – range 5, etc. If the lamps light, check signals $Z\overline{RNG1}$ - $Z\overline{RNG9}$ through the Z and H boards. Signals should go to "0" at output of E board decoders for corresponding range. If these lamps do not light, the E-board range delay, counter clock, and/or range counter must be faulty. If it is desired to isolate the fault to the board circuit, start at E-TP5 then go to TP7, and TP14. Figure 4-43 shows a timing diagram for these circuits. NOTE If the range up-ranges or down-ranges only to a certain range, the range counter has probably failed. If only certain intermediate ranges are not obtained, an IC in the Z-board range matrix has probably failed (Figure 6-27).	If the lamps do not light, this indicates that the proper range-change signals may not be received by E board, or that the RANGE AUTO switch and/or the associated auto-ranging circuitry on the E board may be faulty. Using the mode switch TEST positions and the fixed range mode (1-9), check the following signals go to "0" when the displays read as follows, as appropriate for up-range or down: 1I (I) Display — Signal — Terminal 19999 and forward — $1I\overline{9F}$ — E-TP1 00000 and reverse — $1I\overline{0R}$ — E-TP2 2I (R) Display 19999 and forward — $2I\overline{9F}$ — E-TP4 00000 and reverse — $2I\overline{0R}$ — E-TP3 When any one of these signals is produced, the RANGE lamp should light. If it does, this will verify that the counters are producing the proper signals. Check that signals 1I00 (E80C) and 2I00 (E79C) go to "1" when its associated display reads 00XXX (any numbers in first three digits). If not present, check these outputs from the counter and replace the counters if necessary. Also check that signal $Y\overline{DOWN}$ (E97C) is a "1" during a TEST. If not, check for a short circuit. If the signal is not present at the Y board, the board is faulty. If all the signals are present, check that signal ERRNG (E115C) goes to "1" when the RANGE switch is set to AUTO. If not, the E-board mode circuit is faulty. If a "1", check at E113E to see if terminal goes to "1" when switch is set to AUTO. If not, the mode circuit is faulty.

Table 5-20
TROUBLESHOOTING – BALANCE IS SLOW

Step	Procedure	Signal Present	Signal Not Present
1	This type of fault indicates that the anticipator generator may not be functioning properly or that the S-board phase reference signals may be out of phase. First check that signal $P\overline{START}$, a 15-ms "0" level signal, is present at P43C at the start of a balance operation (LEAKAGE control set to OFF). This type of fault also indicates that the flip-flop (IC1) located beneath the mother board, on the RR board (Fig. 6-31) may be faulty, holding the clock at a slow rate. Signal SFAST should hold IC1 cleared until the bridge is balanced to within 500 counts.	Check that signal PAB (P34E) goes from "1" to "0" at the end of the 15-ms pulse, and that signal PAR (P33E) goes from "0" to "1". This will occur only for a short time during a balance. Signal PAR will then go back to "0" and PAB will go alternately to "0" and "1" during a balance operation. Refer to the table in Fig. 6-19. NOTE P-board lamps DS9 (PAB) and DS10 (PAR) can be observed for proper circuit operation. The lamps light when the signals are "1". If the signals are present, check the anticipator according to para. 5.11.5, part 2, first ensuring that the signals are received at the D board. Replace the D board if necessary. If the signals are not present at the D board, the P board is probably not functioning properly. If the D board is functioning properly, check the phase reference signals at the S board according to paragraph 5.11.6. If none of the above procedures isolate the fault, check that the SVCO clock output of the S-board varies according to the table on Fig. 6-22. If not, replace the S board. (The clock probably has failed, producing only a low-frequency clock). Also see Table 5-10.	P-board "Start" circuitry interface faulty or circuit board at bottom of mother board faulty. Refer to para. 4.4.9 for a description of how this circuit operates, if necessary.

File Courtesy of GRWiki.org

Table 5-21
TROUBLESHOOTING – NO LEAKAGE-CURRENT MEASUREMENT

Step	Procedure	Signal Present	Signal Not Presemt
1	Set the 1683 for a very long measurement and set the LEAKAGE controls for some current (1 μA). Initiate a measurement and check that signal LNG goes to "0" some time during the measurement.	GO lamp, interface wiring, or Z-board leakage-current circuitry (Fig. 6-28) faulty.	Proceed to step 2. NOTE The timing diagram on Figure 6-15 illustrates circuit operation when measuring external leakage current.
2	Check that when a measurement is initiated that signal $\overline{\text{PSTL}}$ (P15C or P-TP8) goes to "0" for about 20 ms.	Proceed to Step 2.	P-board start circuit or anti-bounce switch may be faulty. If the start was initiated at the front panel or by a test fixture, the fault can be isolated to the anti-bounce switch by grounding $\overline{\text{QSING1}}$ (P9E) or LNG (P23C) and observing the signal $\overline{\text{PSTL}}$ occurs. (See Fig. 6-18.) Before replacing the P board, check that the start signal(s) are present at the input to the board. Check that the following start signals, as applicable, go to "0" when the start is initiated. Front panel or Test Fixture, $\overline{\text{ZSTART}}$ (P2E) Via N board, $\overline{\text{NSING2}}$ (P3E) Via Q board, $\overline{\text{QSING1}}$ (P9E) $\overline{\text{NSING2}}$ must be > 20 ms $\overline{\text{NSING1}}$ must be "0" > 0.5 μs < 50 ms If the signals are present, the P board is faulty. If not present, trace the signals, to find the fault.
3	Check that signal $\overline{\text{PLEAKOFF}}$ (P5C) goes to "0" when a measurement is initiated.	Check that the following signals are present at the inputs to the indicated boards at the start of a leakage-current measurement. $\overline{\text{PLEAKOFF}}$ goes to "0" at: Y4E, 4C T6E L24E E79E $\overline{\text{PSTL}}$ goes to "0" at L8E $\overline{\text{PLEAK}}$ goes to "0" at L4E. Check interfaces if signals not present. If $\overline{\text{PLEAK}}$ is not present, part of the P board (gate at output of IC28) may have failed. If signals are present, proceed to step 4.	Check that signal ZLEAKOFF (P5E) is a "1". If not, check wiring and LEAKAGE switch (Fig. 6-28). If present, check that signal ZS2 (P6E) is a "0". If not, check function switch (Fig. 6-27) and associated circuitry and wiring. If the proper signals are present, flip-flop P-IC28 and/or its associated circuitry is probably faulty.
4	Check during a measurement that there is no voltage at Y4E, 4C (signal YC) during a leakage-current measurement. The instrument should be in some fixed range.	One or more relays on the Y board have not been disabled by signal $\overline{\text{PLEAKOFF}}$. NOTE If displays count during a leakage-current measurement, check that the oscillator (T board) and main gates (E board) are shut off by $\overline{\text{PLEAKOFF}}$.	Y-board relays disabled by $\overline{\text{PLEAKOFF}}$. Proceed to Step 5.
5	Check that a signal level is present at L9E at the start of a measurement.	L-board faulty. Refer to paragraph 5.11.8 for details on checking the board operation. Replace the board if necessary.	Check connections.

File Courtesy of GRWiki.org

Parts Lists and Diagrams—Section 6

General 6-1
Mechanical Parts 6-3
Signal Index 6-5
Federal Manufacturer's Code 6-7
Detailed Block Diagram 6-7
Signal Functional Flow Diagram 6-9
Schematics and Parts Lists
B-Divider, B 6-11
C-Divider, C 6-13
Detector, D 6-15
Range, E 6-17
F-Display Module, F 6-18
G-Display Module, G 6-18
U-Display Module, U 6-18
Display, H 6-19, 6-20
Counters, 1I and 2I 6-21, 6-33
Power Amplifier, J 6-25
K-Divider, K 6-27
Leakage-Current, L 6-29
Mother, M 6-31
Data Output, N 6-33
Program, P 6-35, 6-37
Auxiliary (Data-Input), Q 6-39
Auxiliary Comparator, R 6-40
Reference, S 6-41
Oscillator, T 6-43
Power Supply, V 6-45
Y-Bridge, Y 6-47
Control, Z 6-49, 6-50
1683-P1 Test Fixture (including mechanical parts) 6-50
Switch Diagram 6-51
GR Type 874®
Coaxial Connectors 6-52

6.1 GENERAL.

The schematic and logic diagrams are included in the order of their letter designation (Table 4-1), to allow easy location of the drawing. The letter designation is at the end of the figure caption, and it corresponds to the identification of the circuits in the block diagram, functional flow diagram, designations on the circuit-board latches that identify the boards in the instrument, and signal designations in the Signal Run List.

The F, G, and U module schematics are on the H-board schematic, and the assembly layouts are located preceding the H-board schematic. Figure 6-11 shows the interface between the counters and the display circuits.

The heavy lines on drawings denote the major signal flow in the circuits and the instrument.

Reference designation usage is described in paragraph 5.7.

File Courtesy of GRWiki.org

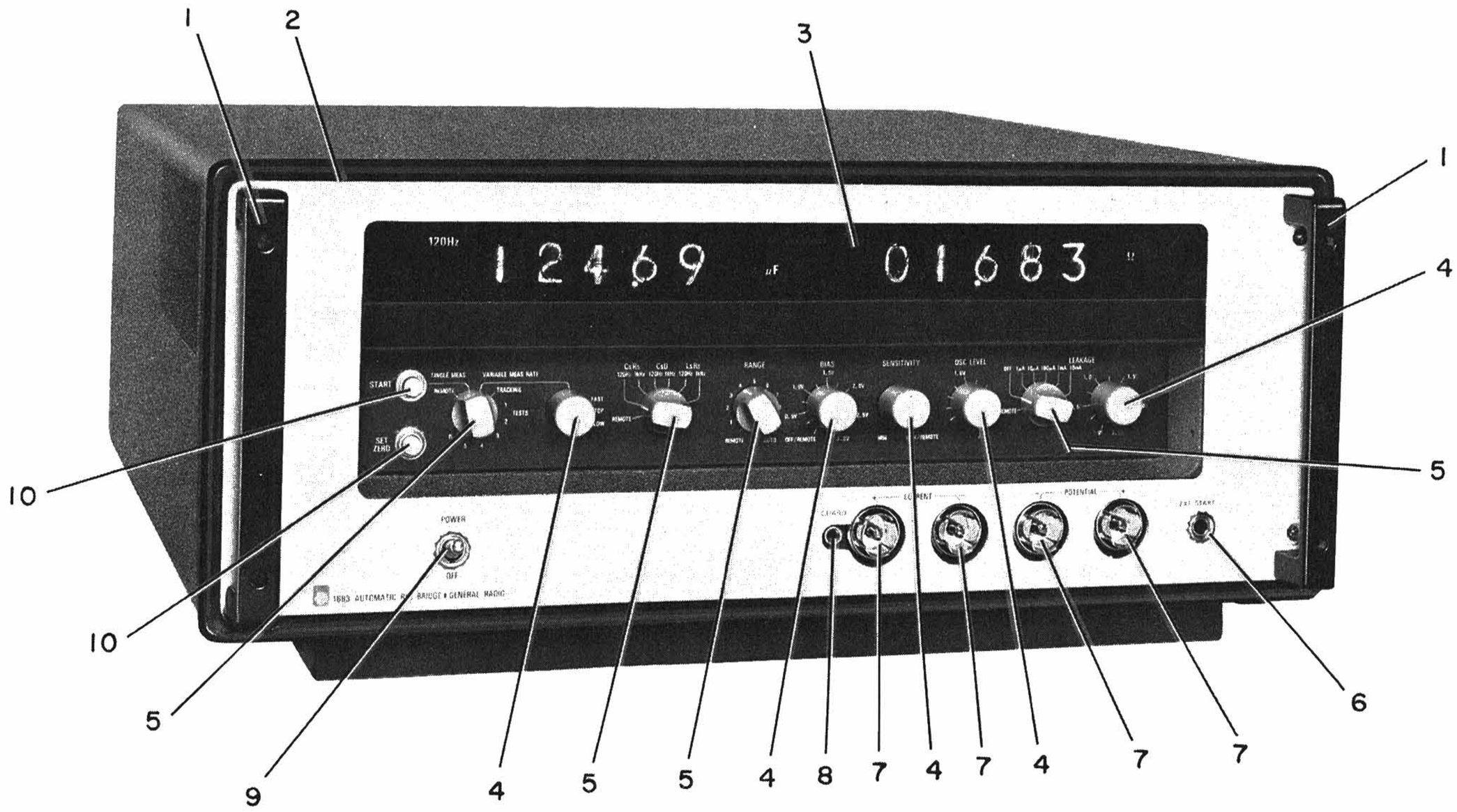

Figure 6-1. Front-panel view identifying parts.

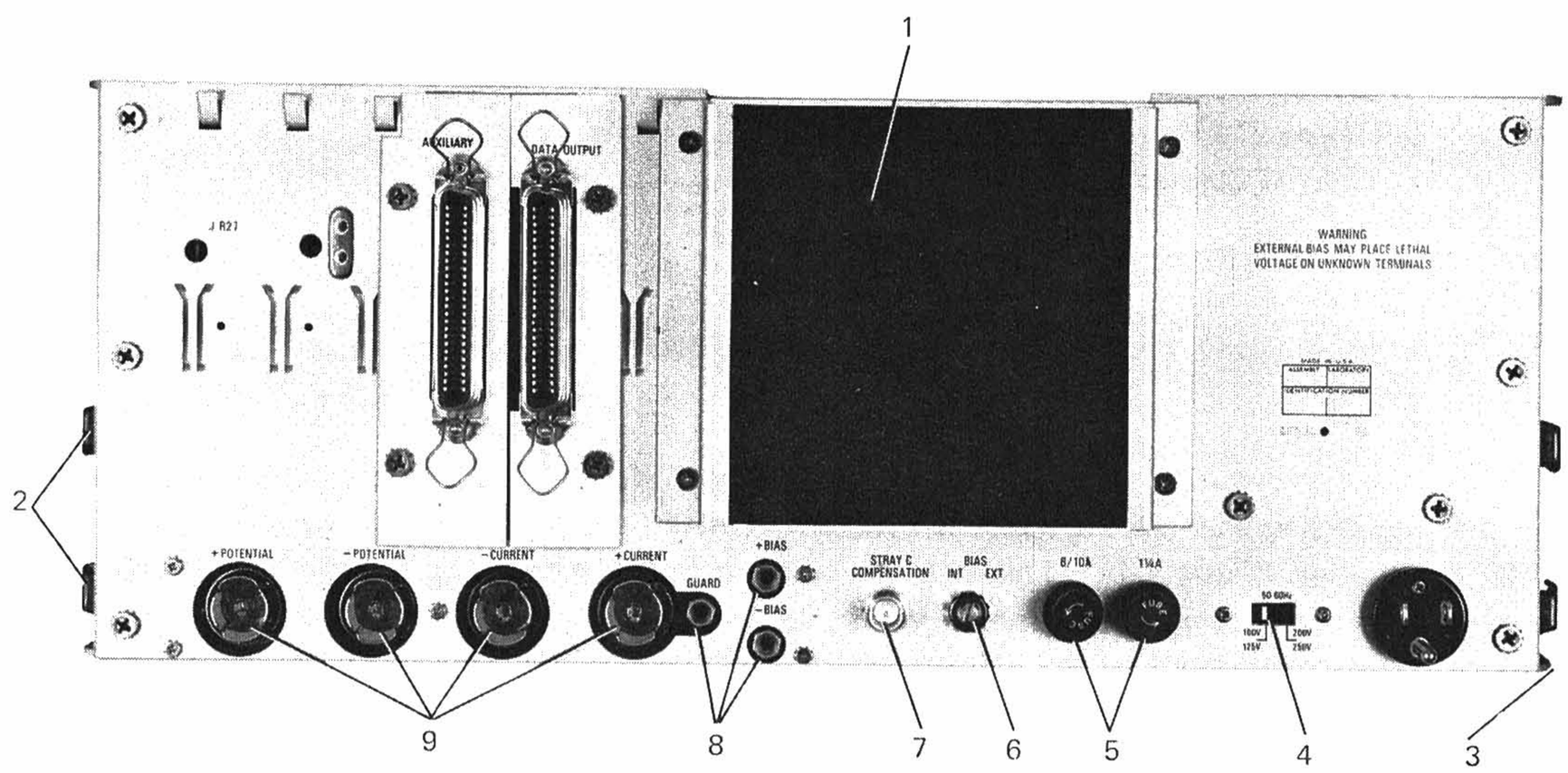

Figure 6-2. Rear-panel view identifying parts.

6-2 PARTS & DIAGRAMS

File Courtesy of GRWiki.org

MECHANICAL PARTS LIST

Qty	Fig Ref	Description	GR Part No.	Mfg Code	Mfg Part No.	Fed Stock No.
FRONT PANEL						
2	1	Handle	5360-2017	24655	5360-2017	
1	2	Cabinet gasket	5331-2182	24655	5331-2182	
1	3	Polaroid window	1683-7000	24655	1683-7000	
5	4	Knob asm., LEAKAGE, level selector; OSC LEVEL; SENSITIVITY; BIAS; FAST/STOP/SLOW, including retainer 5220-5402	5520-5221	24655	5520-5221	
4	5	Knob asm, LEAKAGE, μA-mA; RANGE; FUNCTION SELECTOR; MODE, including retainer 5220-5402	5500-5221	24655	5500-5221	
1	6	Signal jack, A-J56, EXT START	4260-1050	82389	112B	
4	7	Coaxial connector, POTENTIAL (+, -), CURRENT (+, -)	0874-9461	24655	0874-9461	
1	8	Panel jack, A-S53, GUARD	1683-6000	24655	1683-6000	
1	9	Switch, A-S50, POWER-OFF	7910-1300	04009	83053-SA	5930-909-3510
2	10	Pushbutton switch, A-S2, START; A-S3, SET ZERO	7870-1511	81073	4001 N.O.	
MISCELLANEOUS						
1		Bench cabinet asm.:	4173-4004	24655	4173-4004	
1		Base tilt	4171-1077	24655	4171-1077	
1		Foot asm.	4171-1012	24655	4171-1012	
1		Indicator asm:	1683-2000	24655	1683-2000	
1		Window, Capacitor-Inductor Ranges	1683-7411	24655	1683-7411	
14		Lamp, DS5-DS16	5600-1070	17460	2334	
1		Indicator asm:	1683-2010	24655	1683-2010	
1		Window, Resistor-Loss Ranges	1683-7421	24655	1683-7421	
9		Lamp, DS17-DS23	5600-1070	17460	2334	
1		Indicator asm:	1683-2020	24655	1683-2020	
1		Window, Measurement Frequency	1683-7431	24655	1683-7431	
4		Lamp, DS1-DS4	5600-1070	17460	2334	
V-1 thru V-10		Indicator, digital	5437-0845	83781	NL-845	
REAR PANEL						
1	1	Filter	5270-4509	24655	5270-4509	
8	2	Slide blocks	4171-7050	24655	4171-7050	
1	3	Power plug, A-J54	4240-0210	24655	4240-0210	
1	4	Slide switch, A-S51, LINE VOLTAGE SELECTOR	7910-0832	82389	11A-1118	
2	5	Fuse mounting device	5650-0100	71400	HKP-H	5920-284-7144
1	6	Switch, A-S52, BIAS - INT/EXT	7270-4910	24655	7270-4910	
1	7	BNC connector, A-J55, STRAY C COMPENSATION	4230-2301	09408	UG-1094 A/U	
3	8	Panel jack, A-J52, + BIAS; A-J51, -BIAS; A-J50, GUARD	1683-6000	24655	1683-6000	
4	9	Coaxial connector, +POTENTIAL, -POTENTIAL, +CURRENT, -CURRENT	0874-4552	24655	0874-4552	
MISCELLANEOUS						
1		Cover plate - when option 5a or 5b is not utilized*	1683-8730	24655	1683-8730	
1		Cover plate - when option 2 only is not utilized*	1683-8740	24655	1683-8740	

*NOTE: Option 2 is remote programmability
Option 5a is low-level data output
Option 5b is high-level data output

File Courtesy of GRWiki.org

ELECTRICAL PARTS LIST

CHASSIS MOUNTED PARTS
REFERENCE DESIGNATOR NUMBERS HAVE PREFIX LETTER A

REFDES		DESCRIPTION	PART NO.	FMC	MFGR PART NUMBER
AT	1	TERMINAL STANDOFF .112-40 .718H	7970-0600	17117	EMC-4064-91
AT	2	TERMINAL STANDOFF .112-40 .718H	7970-0600	17117	EMC-4064-91
AT	17	TERMINAL STANDOFF .112-40 .718H	7970-0600	17117	EMC-4064-91
B	1	FAN 4.688 SQ 114 CFM	5180-4687	28875	WS2107FL
C	50	CAP ALUM 10000 UF 40V	4450-6211	90201	CGS 10000UF 40V
C	51	CAP ALUM 10000 UF 40V	4450-6211	90201	CGS 10000UF 40V
C	52	CAP ALUM 28000 UF 15V	4450-6210	90201	CGS 28000UF 15V
C	53	CAP ALUM 2400-1200-1200 UF 15V	4450-4200	56289	60D 2400-1200-1200
C	54	CAP ALUM 50-25-25 UF 450V	4450-0800	56289	60D 450V
C	60	CAP TANT 47 UF 20PCT 20V	4450-5614	56289	150D476X0020R2
CB	1	CIRCUIT BREAKER	1926-2000	24655	1926-2000
CR	50	RECT 1N4140 100PIV 3A SI A1XM	6081-1014	14433	1N4140
CR	51	RECT 1N4140 100PIV 3A SI A1XM	6081-1014	14433	1N4140
CR	52	RECT 1N4140 100PIV 3A SI A1XM	6081-1014	14433	1N4140
CR	53	RECT 1N4140 100PIV 3A SI A1XM	6081-1014	14433	1N4140
CR	54	RECT 1N1613 100PIV 5A SI DO4	6081-1012	03508	1N1613
CR	55	RECT 1N1613 100PIV 5A SI DO4	6081-1012	03508	1N1613
CR	56	RECT 1N4140 100PIV 3A SI A1XM	6081-1014	14433	1N4140
CR	57	RECT 1N4140 100PIV 3A SI A1XM	6081-1014	14433	1N4140
CR	58	RECT 1N4004 400PIV .75A SI A50A	6081-1002	14433	1N4004
CR	59	RECT 1N4004 400PIV .75A SI A50A	6081-1002	14433	1N4004
CR	60	RECT 1N4004 400PIV .75A SI A50A	6081-1002	14433	1N4004
CR	61	RECT 1N4004 400PIV .75A SI A50A	6081-1002	14433	1N4004
F	50	FUSE SLO-BLOW 1-1/4A 250V	5330-1600	75915	313 1.25
F	51	FUSE SLO-BLOW 6/10A 250V	5330-1100	75915	313 .600
J	54	4240021024655 4240-0210	4240-0210	42400	4240021024655 4240-0
J	55	RECPT BNC	4230-2301	24655	4230-2301
J	56	PHONE GND .281L 3 CKT	4260-1050	82389	112B
Q	50	TRANSISTOR 2N3055	8210-1097	13327	2N3055
Q	51	TRANSISTOR 2N3740	8210-1121	04713	2N3740
Q	52	TRANSISTOR 40250	8210-1095	02735	40250
Q	53	TRANSISTOR 2N3055	8210-1097	13327	2N3055
R	1	POT COMP KNOB 1M OHM 20PCT SW	6045-5100	24655	6045-5100
R	2	POT COMP KNOB 250 OHM 10PCT SW	6045-0250	24655	6045-0250
R	3	POT COMP KNOB 5K OHM 10PCT SW	6045-0230	24655	6045-0230
R	4	POT COMP KNOB 1K OHM 10 PCT LIN	6000-0300	01121	JAIN056S102UZ
R	50	RES WW MOLDED 1 OHM 10 PCT 2W	6760-9109	75042	BWH 1 OHM 10PCT
R	51	RES COMP 75 OHM 5PCT 1/2W	6100-0755	81349	RCR20G750J
R	52	RES COMP 220 OHM 5PCT 1W	6110-1225	81349	RCR32G221J
R	53	RES COMP 24 OHM 5PCT 1/2W	6100-0245	81349	RCR20G240J
R	54	RES COMP 270 K 5PCT 1/2W	6100-4275	81349	RCR20G274J
R	55	RES WW MOLDED .39 OHM 5 PCT 2W	6760-8395	75042	BWH 0.39 OHM 5PCT
R	56	RES WW MOLDED .39 OHM 5 PCT 2W	6760-8395	75042	BWH 0.39 OHM 5PCT
S	1	POT COMP KNOB 1M OHM 20PCT SW	6045-5100	24655	6045-5100
S	2	SWITCH PUSHBUTTON SPST NO	7870-1511	81073	10-9 N.O.
S	3	SWITCH PUSHBUTTON SPST NO	7870-1511	81073	10-9 N.O.
S	4	SWITCH ROTARY ASM	7890-5298	24655	7890-5298
S	5	SWITCH ROTARY ASM	7890-5299	24655	7890-5299
S	6	SWITCH ROTARY ASM	7890-5297	24655	7890-5297
S	7	POT COMP KNOB 250 OHM 10PCT SW	6045-0250	24655	6045-0250
S	8	POT COMP KNOB 5K OHM 10PCT SW	6045-0230	24655	6045-0230
S	9	SWITCH ROTARY ASM	7890-5301	24655	7890-5301
S	50	SWITCH TOGGLE 2POS DPST STEADY	7910-1300	04009	83053
S	51	SWITCH SLIDE 2 POS DPDT STEADY	7910-0832	82389	11A-1266
S	52	SWITCH ROTARY ASM	7890-5327	24655	7890-5327
T	1	TRANSFORMER POWER	0365-4020	24655	0365-4020

File Courtesy of GRWiki.org

6.2 SIGNAL LIST.

The following table lists all ths signals used in the 1683. The "Signal Name and Description" listing lists the signal names and describes the acronym term and, generally, the function of signal. The first letter of the signal name indicates the circuit board from which the signal originates.

The QOSCOFF signal, for example, originates or is routed from the Q board. OSCOFF means that this signal turns off the bridge oscillator. A signal with a prime mark following it, such as ECHANGE', indicates a bar over the signal name, e.g. $\overline{\text{ECHANGE}}$, which indicates that the desired signal is a logical "0" level.

Most of the signal connections are at etched-circuit-board socket-pin connections available at the bottom of the instrument, on the mother board. The letters E and C shown with pin designations on the schematics designate the side of the board the signals are fed to or are forwarded from — the etched side (E) or component side (C). The mother board has two rows of pin connections, one for the etched-side signals and one for the component-side connections of each board.

Other signal connections are at anchor terminals (AT's) at various points in the instrument; the counter-clockwise position (CCW), clockwise (CW), arms (ARM) positions of potentiometers; and switch connections (for example, AS7-2). The following examples illustrate the designation system:

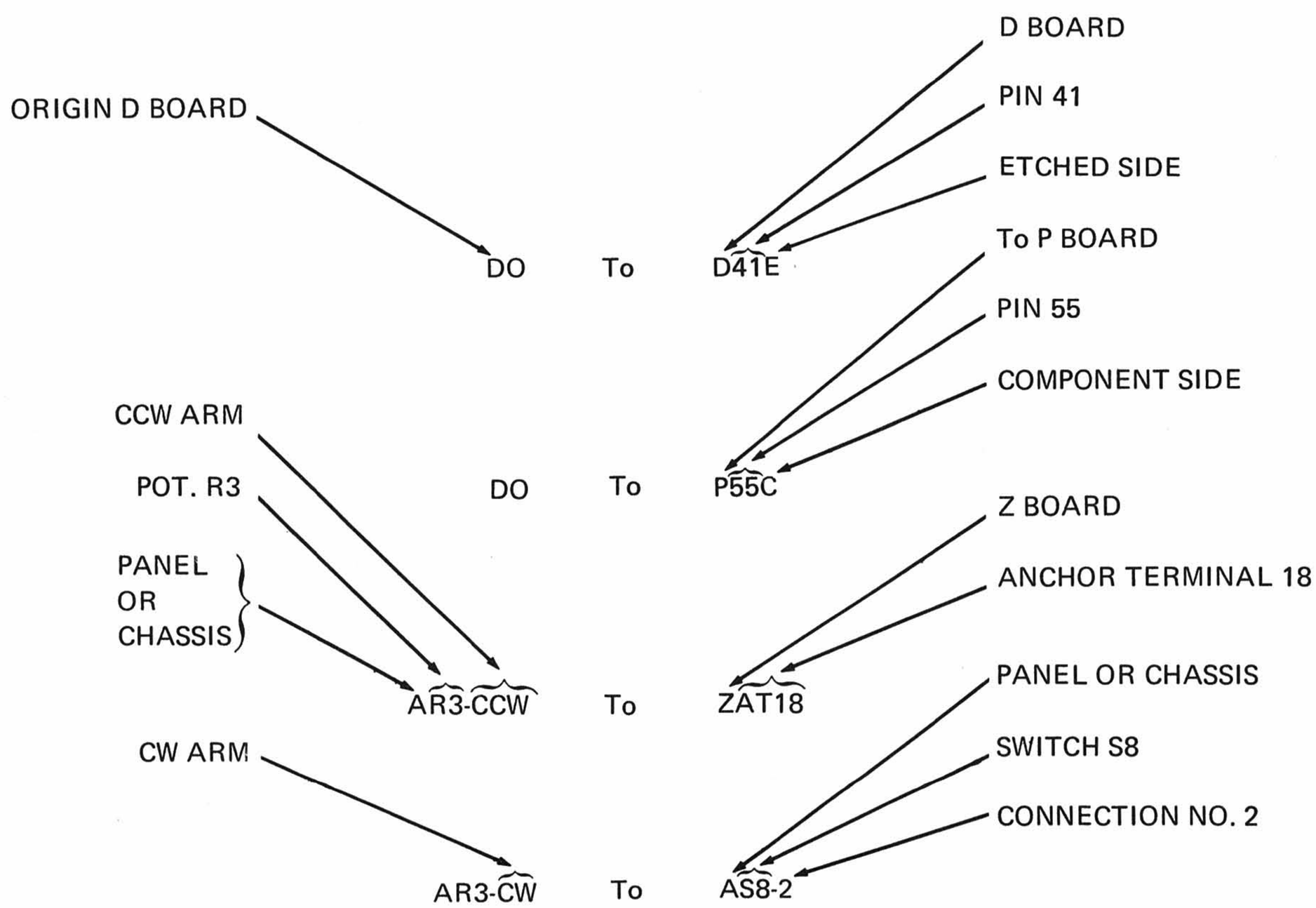

File Courtesy of GRWiki.org

Table 6
SIGNAL LIST

SIGNAL DESCRIPTIONS

BM	OUTPUT OF B DIVIDER
CC	OUTPUT OF C DIVIDER
DF	OUTPUT OF FILTER
DEEE	EARLY ERROR SIGNAL
DC	,SQUARED, ERROR SIGNAL
EBAL	BALANCE SIGNAL
ECHANGE	RANGE CHANGE SIGNAL
ERAN	RANGE LIGHT
ERRNG	REMOTE RANGING
E1ICLK	I SIDE CLOCK
E2ICLK	R SIDE CLOCK
1IQ0	I COUNTER TEN-THOUSANDS 1
1IQ1	I COUNTER THOUSANDS 8
1IQ2	I COUNTER THOUSANDS 4
1IQ3	I COUNTER THOUSANDS 2
1IQ4	I COUNTER THOUSANDS 1
1IQ5	I COUNTER HUNDREDS 8
1IQ6	I COUNTER HUNDREDS 4
1IQ7	I COUNTER HUNDREDS 2
1IQ8	I COUNTER HUNDREDS 1
1IQ9	I COUNTER TENS 8
1IQ10	I COUNTER TENS 4
1IQ11	I COUNTER TENS 2
1IQ12	I COUNTER TENS 1
1IQ13	I COUNTER UNITS 8
1IQ14	I COUNTER UNITS 4
1IQ15	I COUNTER UNITS 2
1IQ16	I COUNTER UNITS 1
1IOO	I COUNTER OOXXX
1IOR	I COUNTER OOOOO.REVERSE
1I9F	I COUNTER 19999.FORWARD
2IQ0	R COUNTER TEN-THOUSANDS 1
2IQ1	R COUNTER THOUSANDS 8
2IQ2	R COUNTER THOUSANDS 4
2IQ3	R COUNTER THOUSANDS 2
2IQ4	R COUNTER THOUSANDS 1
2IQ5	R COUNTER HUNDREDS 8
2IQ6	R COUNTER HUNDREDS 4
2IQ7	R COUNTER HUNDREDS 2
2IQ8	R COUNTER HUNDREDS 1
2IQ9	R COUNTER TENS 8
2IQ10	R COUNTER TENS 4
2IQ11	R COUNTER TENS 2
2IQ12	R COUNTER TENS 1
2IQ13	R COUNTER UNITS 8
2IQ14	R COUNTER UNITS 4
2IQ15	R COUNTER UNITS 2
2IQ16	R COUNTER UNITS 1
2IOO	R COUNTER OOXXX
2IOR	R COUNTER OOOOO.REVERSE
2I9F	R COUNTER 19999.FORWARD
JHC	OUTPUT OF POWER AMPLIFIER
JTCSC	STRAY CAPACITANCE SIGNAL
KM	OUTPUT OF K DIVIDER
KS0	DIVIDER TEN-THOUSANDS 1
KS1	DIVIDER THOUSANDS 8
KS2	DIVIDER THOUSANDS 4
KS3	DIVIDER THOUSANDS 2
KS4	DIVIDER THOUSANDS 1
KS5	DIVIDER HUNDREDS 8
KS6	DIVIDER HUNDREDS 4
KS7	DIVIDER HUNDREDS 2
KS8	DIVIDER HUNDREDS 1
KS9	DIVIDER TENS 8
KS10	DIVIDER TENS 4
KS11	DIVIDER TENS 2
KS12	DIVIDER TENS 1
KS13	DIVIDER UNITS 8
KS14	DIVIDER UNITS 4
KS15	DIVIDER UNITS 2
KS16	DIVIDER UNITS 1
KV	PHASE REFERENCE SIGNAL
LEAKOUT	OUTPUT OF LEAKAGE AMPLIFIER
LGO	LEAKAGE GO
LNG	LEAKAGE NO-GO
MD	ERROR SIGNAL
NINH	INHIBIT REBALANCE
NSING2	SINGLE START PULSE
PAB	ANTICIPATOR DECAY SIGNAL
PABORT	ABORT MEASUREMENT SIGNAL
PAR	ANTICIPATOR RISE SIGNAL
PBUSY	BRIDGE IS BALANCING
PCLK12	CLOCK PULSE TIME 1-2
PCLK23	CLOCK PULSE TIME 2-3
PIG	CLOCK OFF I SIDE
PIR	REVERSE ON I SIDE
PLEAK	START LEAKAGE MEASUREMENT
PLKOFF	GATE OFF LEAKAGE MODE
PRG	CLOCK OFF R SIDE
PRIG	CLOCKS ENABLED
PRR	REVERSE ON R SIDE
PSTART	START PULSE
PSTL	START LEAKAGE PULSE
PVMR	VARIABLE MEASUREMENT CLOCK
QBIAS	BIAS CONTROL GATE
QCD	MEASURE CS WITH D
QCR	MEASURE CS WITH ESR
QLEAK	LEAKAGE LIMIT
QLR	MEASURE LS WITH RS
QRAUTOXT	AUTO RANGE EXTERNAL
QSETO	SET ZERO EXTERNAL
QSING1	START PULSE
Q1000	MEASURE AT 1000HZ
SBAL	BALANCE SIGNAL
SENS	SENSITIVITY LEVEL
SFAST	BRIDGE BALANCING AT FASTEST RATE
SUNBAL	ERROR LESS THAN 6 COUNTS
SVCO	CLOCK OSCILLATOR
S0	0-DEGREE PHASE REFERENCE
S90	90-DEGREE PHASE REFERENCE
S180	180-DEGREE PHASE REFERENCE
S270	270-DEGREE PHASE REFERENCE
TOSC	OUTPUT OF OSCILLATOR
VSYNC	120-HZ SYNC
XLC	LOW CURRENT TERMINAL
XLV	LOW VOLTAGE TERMINAL
XHV	HIGH VOLTAGE TERMINAL
YC	OUTPUT OF RA AMPLIFIER
YDOWN	RA IS SATURATED
YV	OUTPUT OF DIFFERENTIAL AMPLIFIER
ZI3	XX.XXX I SIDE
ZI4	XXX.XX I SIDE
ZI5	XXXX.X I SIDE
ZLEAK	LEAKAGE LEVEL
ZLEAK1	LEAKAGE RANGE 1-MICROAMP
ZLEAK2	LEAKAGE RANGE 10-MICROAMPS
ZLEAK3	LEAKAGE RANGE 100-MICROAMPS
ZLEAK4	LEAKAGE RANGE 1-MILLIAMP
ZLEAK5	LEAKAGE RANGE 10-MILLIAMPS
ZLGO	GO LIGHT
ZLKOFF	GATE OFF LEAKAGE MODE
ZLNG	NO-GO LIGHT
ZL0	1000 HZ LIGHT
ZL1	120 HZ LIGHT
ZL2	P LIGHT
ZL3	KILOHMS LIGHT
ZL4	OHMS LIGHT
ZL5	MILLIOHMS LIGHT
ZL6	MICROHENRIES LIGHT
ZL7	MILLIHENRY
ZL7	MILLIHENRIES LIGHT
ZL8	HENRIES LIGHT
ZL9	NANOHENRIES LIGHT
ZL10	MILLIFARADS LIGHT
ZL11	MICROFARADS LIGHT
ZL12	NANOFARADS LIGHT
ZL13	PICOFARADS LIGHT
ZRAN	RANGE LIGHT
ZPAUTO	AUTO RANGE REMOTE
ZRFN	FUNCTION REMOTE
ZRLEAK	LEAKAGE REMOTE
ZRMOD	MODE REMOTE
ZRNG1	RANGE 1
ZRNG2	RANGE 2
ZRNG3	RANGE 3
ZRNG4	RANGE 4
ZRNG5	RANGE 5
ZRNG6	RANGE 6
ZRNG7	RANGE 7
ZRNG8	RANGE 8
ZRNG9	RANGE 9
ZR2	X.XXXX R SIDE
ZR3	XX.XXX R SIDE
ZR4	XXX.XX R SIDE
ZR5	XXXX.X R SIDE
ZRRNG	RANGE REMOTE
ZSENS	SENSITIVITY LEVEL
ZSETO	SET ZERO
ZSING	SINGLE MEASUREMENT MODE
ZSTART	START PULSE
ZS2	INDUCTANCE
ZS3	1000HZ
ZS3D	1000HZ
ZTBIAS	BIAS LEVEL
ZTOSC	OSCILLATOR LEVEL
ZTRACK	TRACKING MODE
ZT1	COUNT I SIDE FORWARD
ZT2	COUNT I SIDE REVERSE
ZT3	COUNT R SIDE FORWARD
ZT4	COUNT R SIDE REVERSE
ZUNBAL	UNBALANCED LIGHT
ZVAR	VARIABLE MEASUREMENT MODE
ZVAR2	VARIABLE MEASUREMENT RATE CONTROL

NOTE

The Signal Connection List is on Page 6-8.

File Courtesy of GRWiki.org

FEDERAL MANUFACTURER'S CODE

From Federal Supply Code for Manufacturers Cataloging Handbooks H4-1 (Name to Code) and H4-2 (Code to Name) as supplemented through August, 1968.

Code	Manufacturer
00136	McCoy Electronics Co., Mt. Holly Springs, PA 17065
00192	Jones Mfg. Co., Chicago, IL 60607
00194	Walsco Electronics Corp., Los Angeles, CA 90053
00327	Welwyn International, Westlake, OH 44145
00434	Schweber Electronics, Westburg, NY 11590
00656	Aerovox Corp., New Bedford, MA 02745
00779	Amp, Inc., Harrisburg, PA 17105
01009	Alden Products Co., Brockton, MA 02413
01121	Allen-Bradley Co./Electronics Div., Milwaukee, WI 53204
01255	Litton Industries Inc., Beverly Hills, CA 90213
01295	Texas Instruments, Inc., Dallas, TX 75222
01930	Amerock, Corp., Rockford, IL 61101
02111	Spectrol Electronics Corp., City of Industry, CA 91745
02114	Ferroxcube Corp., Saugerties, NY 12477
02606	Fenwal Lab Inc., Morton Grove, IL 60053
02660	Amphenol Electron Corp., Broadview, IL 60153
02768	Fastex, Des Plains, IL 60016
03042	Carter Ink Co., Cambridge, MA 02142
03508	G. E. Semicon Prod., Syracuse, NY 13201
03636	Grayburne, Yonkers, NY 10701
03877	Transitron Electronics, Wakefield, MA 01880
03911	Clairex Corp., New York, NY 10001
04009	Arrow Hart, Hartford, CT 06106
04643	Digitronics Corp., Albertson, NY 11507
04713	Motorola, Phoenix, AZ 85008
04919	Component Mfg. Service, Inc., West Bridgewater, MA 02379
05079	Tansitor Electronics, Bennington, VT 05201
05402	Controls Co. of America, Melrose Park, IL 60160
05574	Viking Industries, Inc., Chatsworth, CA 91311
05624	Barber-Colman Co., Rockford, IL 61101
05748	Barnes Mfg. Co., Mansfield, OH 44901
05820	Wakefield Engineering Inc., Wakefield, MA 01880
06743	Clevite Corp., Cleveland, OH 44110
07126	Digitran Co., Pasadena, CA 91105
07127	Eagle Signal (E.W. Bliss Co.), Baraboo, WI 53913
07233	Cinch Graphik, City of Industry, CA 91744
07261	Avnet Corp., Culver City, CA 90230
07263	Fairchild Semiconductor, Mountain View, CA 94040
07387	Birtcher Corp., No. Los Angeles, CA 90032
07595	Amer. Semiconductor, Arlington Hts, IL 60004
07828	Bodine Corp., Bridgeport, CT 06605
07829	Bodine Electric Co., Chicago, IL 60618
07910	Cont. Device Corp., Hawthorne, CA 90250
07983	State Labs, Inc., New York, NY 10003
07999	Borg Instruments, Delavan, WI 53115
08730	Vemaline Products Co., Franklin Lakes, NJ 07417
09213	G. E. Semiconductor, Buffalo, NY 14207
09353	C & K Components Inc., Watertown, MA 02172
09408	Star-Tronics Inc., Georgetown, MA 01830
09823	Burgess Battery Co., Freeport, IL 61032
09856	Fenwal Electronics, Inc., Framingham, MA 01701
09922	Burndy Corp., Norwalk, CT 06852
11236	CTS of Berne, Inc., Berne, IN 46711
11599	Chandler Evans Corp., W. Hartford, CT 06101
11983	Nortronics Co., Inc., Minneapolis, MN 55427
12040	National Semiconductor, Santa Clara, CA 95051
12045	Electronic Transistors Corp., Flushing, NY 11354
12498	Teledyne Semiconductor, Mountain View, CA 94043
12617	Hamlin, Inc., Lake Millis, WI 53551
12672	R. C. A., Woodbridge, NJ 07095
12697	Clarostat Mfg. Co., Inc., Dover, NH 03820
12954	Dickson Electronics Corp., Scottsdale, AZ 85252
12969	Unitrode Corp., Watertown, MA 02172
13094	Electrocraft Corp., Hopkins, MN 55343
13103	Thermalloy, Inc., Dallas, TX 75234
13327	Solitron Devices, Tappan, NY 10983
13919	Burr Brown Research Corp., Tucson, AZ 85706
14195	Electronic Controls, Inc., Wilton, CT 06897
14433	I.T.T. Semiconductors, W. Palm Beach, FL 33402
14482	Watkins & Johnson Co., Palo Alto, CA 94304
14655	Cornell Dubilier Electronics, Newark, NJ 07101
14674	Corning Glass Works, Corning, NY 14830
14749	Acopian, Easton, PA 18042
14752	Electro Cube, Inc., San Gabriel, CA 91776
14936	General Instrument Corp., Hicksville, NY 11802
15116	Microdot Magnetics, Inc., Los Angeles, CA 90053
15238	I.T.T. Semiconductors, Lawrence, MA 08142
15476	Digital Equipment Corp., Maynard, MA 01754
15605	Cutler Hammer, Inc., Milwaukee, WI 53202
15782	Houston Instrument Corp., Bellaire, TX 77401
16037	Spruce Pine Mica Co., Spruce Pine, NC 28777
16179	Omni Spectra Mich Div., Farmington, MI 48024
16352	Computer Diode Corp., Lodi, NJ 07644
16636	Indiana General Corp., Oglesby, IL 61348
16758	Delco Electronic Div., GMC, Kokomo, IN 46901
16950	Precision Dynamics Corp., Burbank, CA 91504
16952	American Micro Devices, Inc., Summerville, SC 29483
17117	Electronic Molding Corp., Woonsocket, RI 02895
17771	Singer Co., Diehl Div., Somerville, NJ 08876
17850	Zeltex, Inc., Concord, CA 94520
17856	Siliconix, Inc., Santa Clara, CA 95054
18324	Signetics, Corp., Sunnyvale, CA 94086
18542	New Product Engineering Inc., Wabash, IN 46992
18677	Scanbe Manufacturing Corp., El Monte, CA 91731
18736	Voltronics Corp., Hanover, NJ 07936
18736	Computer Diode Corp., S. Fairlawn, NJ 07936
19048	Computer Diode Corp., S. Fairlawn, NJ 07410
19178	Zero Manufacturing Co., Monson, MA 01057
19373	Eastron Corp., Haverhill, MA 01830
19396	Illinois Tool Works, Pakton Div., Chicago, IL 60634
19617	Cabtron Corp., Chicago, IL 60622
19644	L.R.C. Electronics, Horseheads, NY 14845
19701	Electra Mfg. Co., Independence, KS 67301
20754	K.M.C. Semiconductor, Long Valley, NJ 07853
21335	Fafnir Bearing Co., New Britain, CT 06050
21759	Lenox-Fugle Electronics, Watchung, NJ 07060
22753	UID Electronics Div., AMF Inc., Hollywood, FL 33022
23338	Wavetek Div., John Fluke, San Diego, CA 92112
23342	Avnet Electronics Corp., Franklin Park, IL 60131
24355	Analog Devices, Cambridge, MA 02142
24446	General Electric, Schenectady, NY 12305
24454	General Electric Electronics Comp., Syracuse, NY 13201
24455	General Electric Lamp Div., Cleveland, OH 44112
24602	E.M.C. Technology, Cherry Hill, NJ 08034
24655	General Radio Co., Concord, MA 01742
25289	E. G. & G. Inc., Bedford, MA 01730
26806	American Zettler, Inc., Costa Mesa, CA 92626
28480	Hewlett Packard, Palo Alto, CA 04304
28520	Heyman Mfg. Co., Kenilworth, NJ 07033
28959	Hoffman Electronics Corp., El Monte, CA 91734
30646	Beckman Instruments, Inc., Cedar Grove, NJ 07009
30874	I.B.M., Armonk, NY 10504
32001	Jensen Mfg. Co., Chicago, IL 60638
33173	General Electric Comp., Owensboro, KY 42301
34141	Koehler Mfg. Co., Inc., Marlboro, MA 01752
35929	Constanta, Co., Montreal Quebec
37942	P. R. Mallory & Co., Inc., Indianapolis, IN 46206
38443	Marlin-Rockwell Corp., Jamestown, NY 14701
39317	McGill Manufacturing Co., Inc., Valpariso, IN 46383
40931	Honeywell, Inc., Minneapolis, MN 55408
42190	Muter Co., Chicago, IL 60638
42498	National Co., Inc., Melrose, MA 02176
43991	Norma Hoffman, Stanford, CT 06904
49671	R. C.A., New York, NY 10020
49956	Raytheon Mfg. Co., Waltham, MA 02154
50088	Mostek, Carrollton, TX 75006
53021	Sangamo Electric Co., Springfield, IL 62705
54294	Shallcross Mfg. Co., Selma, NC 27576
54715	Shure Brothers, Inc., Evanston, IL 60202
56289	Sprague Electric Co., North Adams, MA 01247
59730	Thomas & Betts Co., Elizabeth, NJ 07207
59875	T.R.W. Inc., (Accessories Div), Cleveland, OH 44117
60399	Torrington Mfg. Co., Torrington, CT 06790
61637	Union Carbide Corp., New York, NY 10017
61864	United-Carr Fastener Corp., Boston, MA 02142
63060	Victoreen Instrument Co., Cleveland, OH 44104
63743	Ward Leonard Electric, Mt. Vernon, NY 10550
65083	Westinghouse (Lamp Div), Bloomfield, NJ 07003
65092	Weston Instruments, Newark, NJ 07114
70106	Acushnet Capacitor Co., New Bedford, MA 02742
70109	Adams and Westlake Co., Elkhart, IN 46514
70485	Atlantic India Rubber Works, Inc., Chicago, IL 60607
70563	Amperite Co., Union City, NJ 07087
70903	Belden Mfg. Co., Chicago, IL 60644
71126	Bronson Homer D., Beacon Falls, CT 06403
71279	Cambridge Thermionic, Corp., Cambridge, MA 02138
71294	Canfield Co., Clifton Forge, VA 24422
71400	Bussmann Mfg. Co., St. Louis, MO 63107
71450	CTS Corp., Elkhart, IN 46514
71468	ITT-Cannon Electric Inc., Los Angeles, CA 90031
71482	C.P. Clare & Co., Chicago, IL 60645
71590	Centralab, Inc., Milwaukee, WI 53212
71666	Continental Carbon Co., Inc., New York, NY 10001
71707	Coto Coil Co., Inc., Providence, RI 02905
71729	Crescent Box Corp., E. Philadelphia, PA 19134
71744	Chicago Miniature Lamp., Chicago, IL 60640
71785	Cinch Jones, Chicago, IL 60624
71823	Darnell Corp., Ltd., Downey, CA 90241
72136	Electromotive Mfg. Co., Willimantic, CT 06226
72228	Continental Screw Co., New Bedford, MA 02742
72259	Nytronics, Inc., Berkeley Hts, NJ 07922
72619	Dialight Co., Brooklyn, NY 11237
72699	General Instrument Corp., Newark, NJ 07104
72765	Drake Mfg. Co., Chicago, IL 60631
72794	Dzus Fastener Co., Inc., West Islip, NY 11795
72825	Eby Co., Hugh H, Philadelphia, PA 19144
72962	Elastic Stop Nut Corp., Union, NJ 07083
72982	Erie Technological Products, Erie, PA 16512
73445	Amperex Electronic Corp., Hicksville, LI, NY 11801
73559	Carling Electric Co., W. Hartford, CT 06110
73690	Elco Resistor Co., New York, NY 10001
73899	J.F.D. Electronics Corp., Brooklyn, NY 11219
73957	Groov-Pin Corp., Ridgefield, NJ 07657
74193	Heinemann Electric Co., Trenton, NJ 08602
74545	Hubbell, Stratford, CT 06497
74861	Industrial Condenser Corp., Chicago, IL 60618
74868	Amphenol RF Division, Danbury, CT 06810
74970	Johnson Co., E.F., Waseca, MN 56093
75042	IRC Div. of TRW, Burlington, IA 52601
75382	Kulka Electric Corp., Mt. Vernon, NY 10551
75491	Lafayette Industrial Electronics, Syosset, NY 11791
75608	Linden & Co., Providence, RI 02905
75915	Littelfuse, Inc., Des Plaines, IL 60016
76005	Lord Mfg. Co., Erie, PA 16512
76149	Mallory Electric Corp., Detroit, MI 48204
76381	Minnesota Mining., St. Paul, MN 55101
76487	Millen Mfg. Co., Inc., Malden, MA 02148
76545	Mueller Electric Co., Cleveland, OH 44114
76684	National Tube Co., Pittsburg, PA 15230
76854	Oak Mfg. Co., Crystal Lake, IL 60014
77147	Patton MacGuyer Co., Providence, RI 02905
77166	Pass-Seymour, Syracuse, NY 13209
77263	Pierce-Roberts Rubber Co., Trenton, NJ 08638
77339	Positive Lockwasher Co., Newark, NJ 07101
77342	American Machine & Foundry Co., Princeton, IN 47570
77542	Ray-O-Vac Co., Madison, WI 53703
77630	T.R.W. Electronic Comp., Camden, NJ 08103
77638	General Instruments Corp., Brooklyn, NY 11211
78189	Shakeproof (Ill. Tool Wks), Elgin, IL 60120
78277	Sigma Instruments Inc., South Braintree, MA 02184
78488	Stackpole Carbon Co., St. Mary's, PA 15827
78553	Tinnerman Products, Inc., Cleveland, OH 44101
79089	R.C.A. Rec. Tube & Semicond., Harrison, NJ 07029
79136	Waldes Kohinoor Co., New York, NY 11101
79725	Wiremold Co., Hartford, CT 06110
79727	Continental WIRT Electronics Corp., Philadelphia, PA 19101
79963	Zierick Mfg. Co., Mount Kisco, NY 10549
80009	Tektronix, Inc., Beaverton, OR 97005
80030	Prestole Fastener, Toledo, OH 43605
80048	Vickers Inc., St. Louis, MO 63166
80103	Lambda Electronics Corp., Melville, NY 11746
80183	Sprague Products Co., North Adams, MA 01247
80211	Motorola Inc., Franklin Park, IL 60131
80251	Formica Corp., Cincinnati, OH 45232
80258	Standard Oil Co., Lafeyette, IN 47902
80294	Bourns Laboratories, Inc., Riverside, CA 92506
80368	Sylvania Electric Products, Inc., New York, NY 10017
80431	Air Filter Corp., Milwaukee, WI 53218
80583	Hammarlund Co., Inc., New York, NY 10010
80894	Pure Carbon Co., St. Mary's, PA 15857
81030	International Instrument, Orange, CT 06477
81073	Grayhill Inc., LaGrange, IL 60525
81143	Isolantite Mfg. Corp., Stirling, NJ 07980
81312	Winchester Electronics Co., Inc., Oakville, CT 06779
81349	Military Specifications
81350	Joint Army-Navy Specifications
81483	International Rectifier Corp., El Segundo, CA 90245
81751	Columbus Electronics Corp., Yonkers, NY 10701
81831	Filtron Co., Flushing, NY 11354
81860	Barry Wright Corp., Watertown, MA 02172
82219	Sylvania Elec. Prod., Emporium, PA 15834
82273	Indiana Pattern & Model Works, LaPort, IN 46350
82389	Switchcraft, Inc., Chicago, IL 60630
82647	Metals & Controls, Inc., Attleboro, MA 02703
82807	Milwaukee Resistor Co., Milwaukee, WI 53204
82877	Rotron Mfg. Co., Inc., Woodstock, NY 12498
83003	Varo Semiconductor Div., Garland, TX 75040
83033	Meissner Mfg., Mt. Carmel, IL 62863
83058	Carr Fastener Co., Cambridge, MA 02142
83186	Victory Engineering, Springfield, NJ 07081
83361	Bearing Specialty Co., San Francisco, CA 94101
83587	Solar Electric Corp., Warren, PA 16365
83594	Burroughs Corp., Plainfield, NJ 07061
83740	Union Carbide Corp., New York, NY 10017
84411	TRW Capacitor Division, Ogallala, NB 69153
84835	Lehigh Metal Products, Cambridge, MA 02140
84970	Sarkes Tarzian, Inc., Bloomington, IN 47401
84971	T.A. Mfg. Corp., Los Angeles, CA 90039
86577	Precision Metal Products, Stoneham, MA 02180
86684	R.C.A. (Elec. Comp. & Dev), Harrison, NJ 07029
86687	R.E. C. Corp., New Rochelle, NY 10801
86800	Cont. Electronics Corp., Brooklyn, NY 11222
88140	Cutler-Hammer Inc., Lincoln, IL 62656
88219	Gould Nat. Batteries, Inc., Trenton, NJ 08607
88419	Cornell Dubilier, Fuquay-Varina, NC 27526
88627	K & G Mfg. Co., New York, NY 10001
89482	Holtzer Cabot Corp., Boston, MA 02119
89665	United Transformer Co., Chicago, IL 60607
89870	Berkshire Transformer Corp., Kent, CT 06757
90201	Mallory Capacitor Co., Indianapolis, IN 46206
90303	Mallory Battery Co., Tarrytown, NY 10591
90634	Gulton Industries, Inc., Metuchen, NJ 08840
90750	Westinghouse Electric Corp., Boston, MA 02118
90952	Hardware Products Co., Reading, PA 19602
91032	Continental Wire Corp., York, PA 17405
91146	I.T.T. (Cannon), Salem, MA 01970
91210	Gerber Mfg. Co., Mishawaka, IN 46544
91293	Johanson Mfg. Co., Boonton, NJ 07005
91417	Harris Semiconductor, Melbourne, FL 32901
91506	Augat Brothers, Inc., Attleboro, MA 02703
91598	Chandler Co., Wethersfield, CT 06109
91637	Dale Electronics, Inc., Columbus, NE 68601
91662	Elco Corp., Willow Grove, PA 19090
91719	General Instruments Corp., Dallas, TX 75220
91836	Kings Electronics, Co., Inc., Tuckahoe, NY 11223
91916	Mephisto Tool Co., Inc., Hudson, NY 12534
91929	Honeywell, Inc., Freeport, IL 61032
92519	Electra Insul. Corp., Woodside, LI., NY 11377
92678	Edgerton Germeshuasen, Georgetown, MA 01830
92702	I.M.C. Magnetics Corp., Westbury, NY 11591
92739	Ampex Corp., Redwood City, CA 94063
92966	Hudson Lamp Co., Kearny, NJ 07032
93332	Sylvania Elect. Prods., Inc., Woburn, MA 01801
93618	R & C Mfg. Co. of Penn, Inc., Ramsey, PA 16671
93916	Cramer Products Co., New York, NY 10013
94144	Raytheon Co., Components Div., Quincy, MA 02169
94154	Tung Sol Electric Inc., Newark, NJ 07101
94271	Weston Instruments, Inc., Archibald, PA 18403
94322	Tel Labs, Manchester, NH 03102
94589	Dickson Co., Chicago, IL 60619
94696	Magnecraft Electric Co., Chicago, IL 60630
94800	Atlas Industrial Corp., Brookline, NH 03033
95076	Garde Mfg. Co., Cumberland, RI 02864
95121	Quality Components, Inc., St. Marys, PA 15857
95146	Alco Electronics Mfg. Co., Lawrence, MA 01843
95238	Continental Connector Corp., Woodside, NY 11377
95275	Vitramon, Inc., Bridgeport, CT 06601
95348	Gordos Corp., Bloomfield, NJ 07003
95354	Methode Mfg. Co., Rolling Meadow, IL 60008
95794	American Brass Co., Torrington, CT 06790
95987	Weckesser Co., Inc., Chicago, IL 60646
96095	Hi Q Division of Aerovox Corp., Olean, NY 14760
96341	Microwave Associates, Inc., Burlington, MA 01801
96906	Military Standards,
98291	Sealectro Corp., Mamaroneck, NY 10544
98474	Compar, Inc., Burlingame, CA 94010
98821	North Hills Electronic, Glen Cove, NY 11542
99117	Metavac, Inc., Flushing, NY 11358
99313	Varian Associates, Palo Alto, CA 94303
99378	Atlee Corp., Winchester, MA 01890
99800	Delevan Electronics, East Aurora, NY 14052

File Courtesy of GRWiki.org

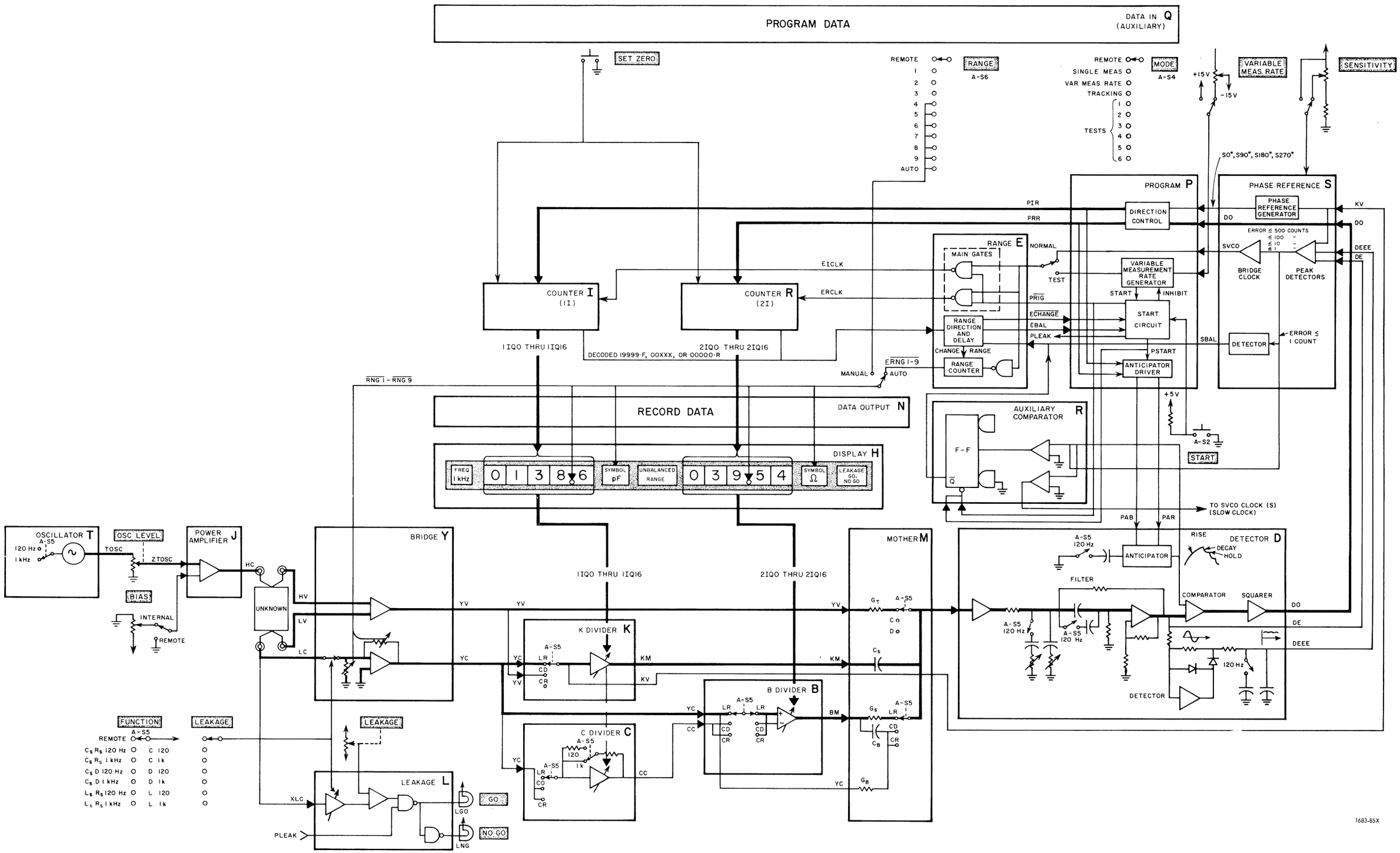

Figure 6-3. Detailed block diagram of the 1683.

File Courtesy of GRWiki.org

1683 SIGNAL CONNECTION LIST

Signal Name	Connection
"A"SBAL	Z 79E
"A"SBAL	S-87C
"A"SBAL	RR-AT1
"A"SUNBAL	S-112C
"A"SUNBAL	RR-AT7
ASYNC	T-8E
ASYNC	AT1-20
BM	B-3E
BM	B-4E
BM	B-3C
BM	B-4C
BM	M-CB, GS
CC	B-85E
CC	B-86E
CC	B-85C
CC	B-86C
CC	C-3E
CC	C-4E
CC	C-3C
CC	C-4C
DE	S-87E
DE	D-33E
DE	D-33C
DEE	S-88E
DEE	D-93E
D0	P-41E
D0	P-55C
DTP2	D-3E
DTP2	RR-AT3
EBAL	P-7C
EBAL	E-96E
EBAL	Q-26E
ECHANGE'	P-6C
ECHANGE'	E-80E
ECHANGE'	S-110C
ECHANGE'	T-7E
ECHANGE'	RR-AT6
ERAN	Z-84E
ERAN	E-69E
ERAN	Q-30E
ERRNG	E-115C
ERRNG	Q-11E
E1ICLK	1I-52E
E1ICLK	E-67C
E2ICLK	2I-111E
E2ICLK	E-71E
11Q0	1I-16C
11Q0	Z-8E VIA S-S01-13
11Q0	RR-AT14
11Q0	H-3E
11Q0'	1I-38C
11Q0'	Z-13C-VIA-S-S01-1
11Q0'	K-79C
11Q0'	N-29E
11Q0'	Q-9C
11Q0'	RR-AT15
11Q0'	H-1C
11Q1	Z-14C
11Q1	1I-16E
11Q1	H-2C
11Q1'	1I-38E
11Q1'	K-64C
11Q1'	N-28C
11Q2	1I-19C
11Q2	Z-9E-VIA-S-S01-12
11Q2	H-4E
11Q2'	1I-39C
11Q2'	K-65C
11Q2'	N-27C

Signal Name	Connection
11Q3	Z-18C
11Q3	1I-19E
11Q3	H-3C
11Q3'	1I-39E
11Q3'	K-77C
11Q3'	N-28E
11Q3'	Q-8C
11Q4	1I-20C
11Q4	Z-9C-VIA-S-S01-5
11Q4	H-5E
11Q4'	1I-42C
11Q4'	K-78C
11Q4'	N-27E
11Q5	Z-17C
11Q5	1I-20E
11Q5	H-4C
11Q5'	1I-42E
11Q5'	K-48C
11Q5'	N-26C
11Q6	1I-23C
11Q6	Z-10C-VIA-S-S01-4
11Q6	H-6E
11Q6'	1I-43C
11Q6'	K-49C
11Q6'	N-25C
11Q7	Z-16C
11Q7	1I-23E
11Q7	H-5C
11Q7'	1I-43E
11Q7'	K-62C
11Q7'	N-26E
11Q8	1I-24C
11Q8	Z-11C-VIA-S-S01-3
11Q8	H-7E
11Q8'	1I-45C
11Q8'	K-63C
11Q8'	N-25E
11Q9	Z-15C
11Q9	1I-24E
11Q9	H-8C
11Q9'	1I-45E
11Q9'	K-32C
11Q9'	N-24C
11Q10	1I-26C
11Q10	Z-12C-VIA-S-S01-2
11Q10	H-8E
11Q10'	1I-46C
11Q10'	K-33C
11Q10'	N-23C
11Q11	Z-53C
11Q11	1I-26E
11Q11	H-50E
11Q11'	1I-46E
11Q11'	K-46C
11Q11'	N-24E
11Q12	Z-62C
11Q12	1I-27C
11Q12	H-51E
11Q12'	1I-48C
11Q12'	K-47C
11Q12'	N-23E
11Q13	Z-63C
11Q13	1I-27E
11Q13	H-52E
11Q13'	1I-48E
11Q13'	K-16C
11Q13'	N-22C
11Q14	Z-49C
11Q14	1I-29C

Signal Name	Connection
11Q14	H-51C
11Q14'	1I-49C
11Q14'	K-17C
11Q14'	N-18C
11Q15	Z-48C
11Q15	1I-29E
11Q15	H-52C
11Q15'	1I-49E
11Q15'	K-30C
11Q15'	N-22E
11Q16	Z-47C
11Q16	1I-30C
11Q16	H-53C
11Q16'	1I-52C
11Q16'	K-31C
11Q16'	N-18E
1100	1I-31E
1100	E-80C
110R'	1I-31C
110R'	E-68C
119F'	1I-15C
119F'	E-69C
21Q0	Z-45C
21Q0	2I-75C
21Q0	H-57C
21Q0	RR-AT12
21Q0'	Z-46C
21Q0'	2I-97C
21Q0'	B-81E
21Q0'	N-17E
21Q0'	RR-AT13
21Q0'	H-56C
21Q1	Z-44C
21Q1	2I-75E
21Q1	H-58C
21Q1'	2I-97E
21Q1'	B-64E
21Q1'	Y-74E
21Q1'	Y-74C
21Q1'	N-17C
21Q2	Z-43C
21Q2	2I-78C
21Q2	H-59C
21Q2'	2I-98C
21Q2'	B-65E
21Q2'	N-16C
21Q3	Z-42C
21Q3	2I-78E
21Q3	H-60C
21Q3'	2I-98E
21Q3'	B-78E
21Q4	Z-51C
21Q4	2I-79C
21Q4	H-61C
21Q4'	2I-101C
21Q4'	B-79E
21Q4'	N-15E
21Q5	Z-52C
21Q5	2I-79E
21Q5	H-62C
21Q5'	2I-101E
21Q5'	B-48E
21Q5'	B-62C
21Q5'	N-15C
21Q6	Z-99E
21Q6	2I-82C
21Q6	H-63C
21Q6'	2I-102C
21Q6'	B-49E

Signal Name	Connection
21Q6'	B-63C
21Q6'	B-64C
21Q6'	B-65C
21Q6'	N-14C
21Q7	Z-96E
21Q7	2I-82E
21Q7	H-64C
21Q7'	2I-102E
21Q7'	B-62E
21Q7'	N-14E
21Q8	Z-97E
21Q8	2I-83C
21Q8	H-66C
21Q8'	2I-104C
21Q8'	B-63E
21Q8'	N-13E
21Q9	Z-98E
21Q9	2I-83E
21Q9	H-67C
21Q9'	2I-104E
21Q9'	B-32E
21Q9'	N-13C
21Q10	Z-95E
21Q10	2I-85C
21Q10	H-67E
21Q10'	2I-105C
21Q10'	B-33E
21Q10'	N-12C
21Q11	Z-103E
21Q11	2I-85E
21Q11	H-112C
21Q11'	2I-105E
21Q11'	B-46E
21Q11'	B-46C
21Q11'	B-47C
21Q11'	B-48C
21Q11'	B-49C
21Q11'	N-12E
21Q12	Z-102E
21Q12	2I-86C
21Q12	H-113C
21Q12'	2I-107C
21Q12'	B-47E
21Q12'	N-11E
21Q13	Z-101E
21Q13	2I-86E
21Q13	H-114C
21Q13'	2I-107E
21Q13'	B-16E
21Q13'	N-11C
21Q14	Z-104E
21Q14	2I-88C
21Q14	H-110C
21Q14'	2I-108C
21Q14'	B-17E
21Q14'	N-7C
21Q15	Z-105E
21Q15	2I-88E
21Q15	H-111C
21Q15'	2I-108E
21Q15'	B-30E
21Q15'	B-30C
21Q15'	B-31C
21Q15'	B-32C
21Q15'	B-33C
21Q15'	N-6C
21Q16	Z-106E
21Q16	2I-89C
21Q16	H-115C

Signal Name	Connection
21Q16'	2I-111C
21Q16'	B-31E
21Q16'	N-5C
2100	2I-91E
2100	E-79C
210R'	2I-91C
210R	E-70E
210R'	2I-92C
219F'	2I-74C
219F'	E-70C
ILOC	1I-32E
ILOC	P-20C
JHC	S-62E
JHC	J-35C
JHC	J-35E
JTOSC	J-11E
JTOSC	C17 CAPACITOR TO XLV (Y90C,E)
KM	K3E,C
KM	K4E,C
KMA	K1C
KMA	K3E,C TO MR123 (1300Ω)
KMA	K4E,C
KS0	C-79E
KS0	C-79C
KS0	K-79E
KS1	C-65E
KS1	C-65C
KS1	K-65E
KS2	C-64E
KS2	C-64C
KS2	K-64E
KS3	C-77E
KS3	C-77C
KS3	K-77E
KS4	C-78E
KS4	C-78C
KS4	K-78E
KS5	C-49E
KS5	C-49C
KS5	K-49E
KS6	C-48E
KS6	C-48C
KS6	K-48E
KS7	C-62E
KS7	C-62C
KS7	K-62E
KS8	C-63E
KS8	C-63C
KS8	K-63F
KS9	C-33E
KS9	C-33C
KS9	K-33E
KS10	C-32E
KS10	C-32C
KS10	K-32E
KS11	C-46E
KS11	C-46C
KS11	K-46E
KS12	C-47E
KS12	C-47C
KS12	K-47E
KS13	C-17E
KS13	C-17C
KS13	K-17E
KS14	C-16E
KS14	C-16C
KS14	K-16E
KS15	C-30E
KS15	C-30C
KS15	K-30E
KS16	C-31E

Signal Name	Connection
KS16	C-31C
KS16	K-31E
KV	S-60E
KV	K-91E
KV	K-91C
LEAKOUT	Q-32C
LEAKOUT	Q-32E
LEAKOUT	L-3E
LGO	Z-106C
LGO	L-5C
LGO	L-5E
LNG	Z-105C
LNG	P-23C
LNG	N-8E
LNG	Q-28E
LNG	L-7E
LREMGO'	Q-25C
LREMGO'	L-24C
MAT6 −21.5V	V-11C
MAT6 −21.5V	V-12C
MAT6 −21.5V	V-11E
MAT6 −21.5V	V-12E
MAT6 −21.5V	V-13E
MAT7	V-29C
MAT7	V-30C
MAT7	V-29E
MAT7	V-30E
MAT9	V-35C
MAT9	V-36C
MAT9	V-35E
MAT9	V-36E
MAT10	V-27C
MAT10	V-28C
MAT10	V-27E
MAT10	V-28E
MAT12	V-31C
MAT12	V-32C
MAT12	V-31E
MAT12	V-32E
MAT13	V-25C
MAT13	V-26C
MAT13	V-25E
MAT13	V-26E
MAT15	V-15C
MAT15	V-14E
MAT15	V-15E
MAT16	V-16C
MAT16	V-17C
MAT16	V-16E
MAT16	V-17E
MAT19	V-3C
MAT19	V-4C
MAT19	V-3E
MAT19	V-4E
MAT20	V-1C
MAT20	V-2C
MAT20	V-1E
MAT20	V-2E
MD	D-1E
MD	D-1C
MD	K-1
MD	K-2
MD	K-3
MD	K-4
MD	K-5
MD	K-6
MD	K-7
NINH'	P-15E
NINH'	N-34E
NINH'	Q-34E
NSING2'	P-3E

Signal Name	Connection
NSING2'	N-34C
PAB	P-34E
PAB	D-42E
PABORT'	P-3C
PABORT'	N-31C
PABORT'	Q-33C
PABORT'	Q-29E
PAR	P-33E
PAR	D-88E
PBUSY	P-21C
PBUSY	P-22E
PBUSY	N-29C
PBUSY	Q-30C
PBUSY	J-24C
PBUSY	J-24E
PCLK12	P-28C
PCLK12	P-30C
PCLK12	E-98C
PCLK23	P-27C
PCLK23	E-82E
PIG'	P-43E
PIG'	E-68E
PIR	1I-30E
PIR	E-73C
PIR	P-45E-VIA-B-S01-9
PIR	Q-24E
PLEAK'	P-4C
PLEAK'	L-6E
PLKOFF'	P-5C
PLKOFF'	E-79E
PLKOFF'	Y-88E
PLKOFF'	Y-88C
PLKOFF'	N-9E
PLKOFF'	Q-12C
PLKOFF'	L-24E
PLKOFF'	T-6C
PLKOFF'	T-6E
PLOC'	P-21E
PLOC'	S-86C
PRG'	E-72E
PRG'	P-46E-VIA-B-S01-10
PRIG	P-16E
PRIG	E-66E
PRIG	Z-12E-VIA-S-S01-9
PRIG	Q-18C
PRR	2I-89E
PRR	E-82C
PRR	P-56E-VIA-B-S01-13
PRR	Q-24C
PSTART'	Z-61E
PSTART'	P-43C
PSTART'	P-4E
PSTART'	RR-AT10
PSTL'	P-15C
PSTL'	K-80C
PSTL'	L-8E
PSTL'	T-5C
PTP6'	P-9C
PTP6'	E-72C
PVMR	P-23E
QBIAS'	Q-23C
QBIAS'	J-23E
QCD'	Z-42E
QCD'	Q-15E
QCR'	Z-41E
QCR'	Q-14E
QLEAK	Z-104C
QLEAK	Y-94E
QLEAK	Y-94C
QLEAK	Q-38C
QLR'	Z-43E

Signal Name	Connection
QLR'	Q-16E
QOSCOFF	Q-11C
QOSCOFF	T-38C
QOSCOFF	T-38E
QRAUTOXT	E-116C
QRAUTOXT	Q-27E
QREMSET'	Q-26C
QREMSET'	L-23C
QREMSET'	L-23E
QSET0'	Z-39C
QSET0	Q-23E
QSING1'	P-9E
QSING1'	Q-17C
Q1000'	Z-22C
Q1000'	Q-13E
SBAL	E-95C
SBAL	E-113C
SBAL	S-109C
SENS	Z-83C
SENS	S-85C
SFAST	P-30E
SFAST	RR-AT18
SFAST	S-113C
SUNBAL	Z-83E
SUNBAL	S-88C
SUNBAL	Q-25E
SVCO	P-29E
SVCO	S-111C
S0	S-62C
S0	P-46C-VIA-B-201-3
S90	S-60C
S90	P-56C-VIA-B-S01-6
S90	P-57C-VIA-B-S01-7
S180	S-63C
S180	P-45C-VIA-B-S01-2
S270	S-61C
S270	P-57E-VIA-B-S01-14
TG1	Y-68E
TG1	Y-69E
TG1	Y-68C
TG1	Y-69C
TG1	V-9C
TG1	V-10C
TG1	V-9E
TG1	V-10E
TG1	J-38C
TG1	J-38E
TOSC	Z-82C
TOSC	T-5E
TP3	S-116C
TP3	RR-AT5
XHC	S-62E
XHC	J-35C
XHC	J-35E
XHC	CUR+REAR
XHC	CUR+FRONT
XHV	Y-93E
XHV	Y-93C
XHV	POT+REAR
XHV	POT+FRONT
XLC	Y-70E
XLC	Y-70C
XLC	L-9E
XLC	CUR−REAR
XLC	CUR−FRONT
XLV	Y-90E
XLV	Y-90C
XLV	POT−REAR
XLV	POT−FRONT
YC	B-89E
YC	B-90E

Signal Name	Connection
YC	B-89C
YC	B-90C
YC	C-87E
YC	C-88E
YC	C-87C
YC	C-88C
YC	K-87E
YC	K-87C
YC	Y-4E
YC	Y-4C
YDOWN	E-97C
YDOWN	Y-5E
YDOWN	Y-5C
YCLAMP'	Z-60E
YCLAMP'	Y-3E
YG,TG,GND	Z-80C
YG,TG,GND	Z-84C
YG,TG,GND	Z-99C
YG,TG,GND	Z-47E
YG,TG,GND	Z-80E
YG,TG,GND	Z-81E
YG,TG,GND	Z-85E
YG,TG,GND	1I-1C
YG,TG,GND	1I-1E
YG,TG,GND	1I-53E
YG,TG,GND	2I-60C
YG,TG,GND	2I-60E
YG,TG,GND	2I-112E
YG,TG,GND	P-14E
YG,TG,GND	P-28E
YG,TG,GND	E-66C
YG,TG,GND	S-61E
YG,TG,GND	S-63E
YG,TG,GND	S-109E
YG,TG,GND	S-113E
YG,TG,GND	S-115E
YG,TG,GND	D-2E
YG,TG,GND	D-30E
YG,TG,GND	D-40E
YG,TG,GND	D-91E
YG,TG,GND	D-2C
YG,TG,GND	D-3C
YG,TG,GND	D-4C
YG,TG,GND	D-91C
YG,TG,GND	B-1E
YG,TG,GND	B-2E
YG,TG,GND	B-93E
YG,TG,GND	B-94E
YG,TG,GND	B-95E
YG,TG,GND	B-1C
YG,TG,GND	B-2C
YG,TG,GND	B-93C
YG,TG,GND	B-94C
YG,TG,GND	B-95C
YG,TG,GND	C-1E
YG,TG,GND	C-2E
YG,TG,GND	C-93E
YG,TG,GND	C-1C
YG,TG,GND	C-2C
YG,TG,GND	C-93C
YG,TG,GND	K-1E
YG,TG,GND	K-2E
YG,TG,GND	K-93E
YG,TG,GND	K-94E
YG,TG,GND	K-95E
YG,TG,GND	K-2C
YG,TG,GND	K-93C
YG,TG,GND	K-94C
YG,TG,GND	K-95C
YG,TG,GND	Y-2E
YG,TG,GND	Y-16E

Signal Name	Connection
YG,TG,GND	Y-20E
YG,TG,GND	Y-21E
YG,TG,GND	Y-22E
YG,TG,GND	Y-23E
YG,TG,GND	Y-33E
YG,TG,GND	Y-34E
YG,TG,GND	Y-35E
YG,TG,GND	Y-36E
YG,TG,GND	Y-50E
YG,TG,GND	Y-51E
YG,TG,GND	Y-52E
YG,TG,GND	Y-53E
YG,TG,GND	Y-60E
YG,TG,GND	Y-61E
YG,TG,GND	Y-71E
YG,TG,GND	Y-89E
YG,TG,GND	Y-92E
YG,TG,GND	Y-2C
YG,TG,GND	Y-16C
YG,TG,GND	Y-20C
YG,TG,GND	Y-21C
YG,TG,GND	Y-22C
YG,TG,GND	Y-23C
YG,TG,GND	Y-33C
YG,TG,GND	Y-34C
YG,TG,GND	Y-35C
YG,TG,GND	Y-36C
YG,TG,GND	Y-50C
YG,TG,GND	Y-51C
YG,TG,GND	Y-52C
YG,TG,GND	Y-53C
YG,TG,GND	Y-60C
YG,TG,GND	Y-61C
YG,TG,GND	Y-71C
YG,TG,GND	Y-89C
YG,TG,GND	Y-92C
YG,TG,GND	V-20C
YG,TG,GND	V-21C
YG,TG,GND	V-20E
YG,TG,GND	V-21E
YG,TG,GND	N-33C
YG,TG,GND	N-37C
YG,TG,GND	N-33E
YG,TG,GND	N-37E
YG,TG,GND	Q-36C
YG,TG,GND	Q-37E
YG,TG,GND	Q-38E
YG,TG,GND	L-4C
YG,TG,GND	L-33C
YG,TG,GND	L-36C
YG,TG,GND	L-4E
YG,TG,GND	L-33E
YG,TG,GND	L-36E
YG,TG,GND	T-35C
YG,TG,GND	T-9E
YG,TG,GND	T-35E
YG,TG,GND	J-31C
YG,TG,GND	J-31E
YG,TG,GND	RR-AT8
YG,TG,GND	RR-AT11
YG,TG,GND	POT−SHIELD
YG,TG,GND	POT+SHIELD
YG,TG,GND	CUR+SHIELD
YG,TG,GND	CUR−SHIELD
YG,TG,GND	STRAY−C−SHIELD
YG,TG,GND	GUARD
YG,TG,GND	CUR−SHIELD−FRONT
YG,TG,GND	CUR+SHIELD−FRONT
YG,TG,GND	POT−SHIELD−FRONT
YG,TG,GND	POT+SHIELD−FRONT
YG,TG,GND	GUARD−FRONT

Signal Name	Connection
YV	K-90E
YV	K-90C
YV	Y-1E
YV	Y-1C
Z13	ZH6C
Z13	H6C
Z14	ZH7C
Z14	H7C
Z15	ZH50C
Z15	H50C
ZLEAK'	Z-95C
ZLEAK'	L-2E
ZLEAK1'	Z-98C
ZLEAK2'	Z-100C
ZLEAK2'	Q-14C
ZLEAK2'	L-21E
ZLEAK3'	Z-101C
ZLEAK3'	Q-15C
ZLEAK3'	L-21C
ZLEAK3'	L-22E
ZLEAK4'	Z-102C
ZLEAK4'	C-85E
ZLEAK4'	C-85C
ZLEAK4'	K-84E
ZLEAK4'	K-84C
ZLEAK4'	Q-17E
ZLEAK4'	L-32C
ZLEAK4'	L-32E
ZLEAK5'	Z-103C
ZLEAK5'	Y-95E
ZLEAK5'	Y-95C
ZLEAK5'	Q-18E
ZLEAK5'	L-31C
ZLEAK5'	L-31E
ZLGO'	ZH115E
ZLGO'	H115E
ZLGO'	F2E
ZLKOFF'	Z-97C
ZLKOFF'	P-5E
ZLKOFF'	Q-13C
ZLNG'	ZH114E
ZLNG'	H114E
ZLNG'	F3E
ZL0'	ZH2E
ZL0'	H2E
ZL0'	U2E
ZL1'	ZHIE
ZLI'	HIE
ZLI'	U3E
ZL2'	ZH112E
ZL2'	H112E
ZL2'	F5E
ZL3'	ZH116E
ZL3'	H116E
ZL3'	F6E
ZL4'	ZH113E
ZL4'	H113E
ZL4'	F4E
ZL5'	ZH110E
ZL5'	H110E
ZL5'	F7E
ZL6'	ZH56E
ZL6'	H56E
ZL6'	G9E
ZL7'	ZH54E
ZL7'	H54E
ZL7'	G11E
ZL8'	ZH55E
ZL8'	H55E
ZL8'	G10E
ZL9'	ZH53E

Signal Name	Connection
ZL9'	H53E
ZL9'	G12E
ZL10'	ZH58E
ZL10'	H58E
ZL10'	G7E
ZL11'	ZH59E
ZL11'	H59E
ZL11'	G6E
ZL12'	ZH57E
ZL12'	H57E
ZL12'	G8E
ZL13'	ZH60E
ZL13'	H60E
ZL13'	G5E
ZRAN'	ZH62E
ZRAN'	H62E
ZRAN'	G3E
ZRAUT0'	Z-51E
ZRAUT0'	E-116E
ZRFN'	Z-40E
ZRFN'	Q-12E
ZRLEAK'	Z-96C
ZRLEAK'	Q-16C
ZRMOD'	Z-16E
ZRMOD'	Q-6C
ZRNG1'	Z-45E
ZRNG1'	E-105E
ZRNG1'	Y-87E
ZRNG1'	Y-87C
ZRNG1'	N-6E
ZRNG1'	Q-7E
ZRNG2'	Z-46E
ZRNG2'	E-106C
ZRNG2'	Y-86E
ZRNG2'	Y-86C
ZRNG2'	N-3E
ZRNG2'	Q-6E
ZRNG3'	Z-48E
ZRNG3'	E-107E
ZRNG3'	C-80E
ZRNG3'	C-80C
ZRNG3'	K-80E
ZRNG3'	Y-85E
ZRNG3'	Y-85C
ZRNG3'	N-5E
ZRNG3'	Q-5E
ZRNG4'	Z-49E
ZRNG4'	E-107C
ZRNG4'	Y-84E
ZRNG4'	Y-84C
ZRNG4'	N-3C
ZRNG4'	Q-4E
ZRNG5'	Z-50E
ZRNG5'	E-114E
ZRNG5'	Y-81E
ZRNG5'	Y-81C
ZRNG5'	N-7E
ZRNG5'	Q-3E
ZRNG6'	Z-52E
ZRNG6'	E-108E
ZRNG6'	Y-80E
ZRNG6'	Y-80C
ZRNG6'	N-4C
ZRNG6'	Q-2E
ZRNG7'	Z-53E
ZRNG7'	E-115E
ZRNG7'	Y-79E
ZRNG7'	Y-79C
ZRNG7'	N-4E
ZRNG7	Q-4C
ZRNG7'	Q-9E

Signal Name	Connection
ZRNG7'	L-3C
ZRNG8'	Z-62E
ZRNG8'	E-98E
ZRNG8'	Y-78E
ZRNG8'	Y-78C
ZRNG8'	N-2C
ZRNG8'	Q-3C
ZRNG8'	Q-8E
ZRNG8'	L-2C
ZRNG9'	Z-63E
ZRNG9'	E-106E
ZRNG9'	Y-77E
ZRNG9'	Y-77C
ZRNG9'	N-2E
ZRNG9'	Q-2C
ZR2	ZH55C
ZR2	H55C
ZR3	ZH56C
ZR3	H56C
ZR4	ZH109E
ZR4	H109E
ZR5	ZH109C
ZR5	H109C
ZRRNG'	Z-44E
ZRRNG'	E-114C
ZSENS	Z-85C
ZSENS	S-86E
ZSENS	Q-31C
ZSET0	Z-38C
ZSET0	1I-15E
ZSET0	2I-74E
ZSING'	Z-15E
ZSTART'	P-2E
ZSTART'	Z-80-VIA-S-S01-6
ZSTART'	EXT-START
ZS1	Z-22E
ZS1	B-92E
ZS2	Z-19C
ZS2	P-6E
ZS2	E-81E
ZS2	D-43E
ZS2	K-92E
ZS2	K-92C
ZS2	J-22E
ZS3	Z-21E
ZS3	S-85E
ZS3	D-92E
ZS3	D-92C
ZS3	C-91E
ZS3	T-10E
ZS3	RR-AT16
ZS3D	Z-41C
ZS3D	D-90E
ZS4	Z-23E
ZS4	1I-32C
ZS4	B-91E
ZS4	B-91C
ZS4	C-90E
ZTBIAS	Z-82E
ZTBIAS	J-8C
ZTBIAS	J-9E
ZT0SC	Z-81C
ZT0SC	J-10E
ZT0SC	STRAY−C
ZTRACK'	P-20E
ZTRACK'	S-115C
ZTRACK'	Z-13E-VIA-S-S01-8
ZTRACK'	Q-5C
ZT1'	P-31C
ZT1'	Z-11E-VIA-S-S01-10
ZT1'	P-44E-VIA-B-S01-8

Signal Name	Connection
ZT2'	P-29C
ZT2'	Z-10E-VIA-S-S01-11
ZT2'	P-44C-VIA-B-S01-1
ZT3'	Z-17E
ZT3'	P-32C
ZT3'	P-55E-VIA-B-S01-12
ZT4'	Z-18E
ZT4'	P-33C
ZT4'	P-54C-VIA-B-S01-4
ZT5'	Z-19E
ZT5'	P-32E
ZT6'	Z-20E
ZT6'	P-31E
ZUNBAL'	ZH61E
ZUNBAL'	H61E
ZUNBAL'	G4E
ZVAR'	Z-14E
ZVAR'	P-22C
ZVAR'	Q-7C
ZVARR	Z-38E
ZVARR	P-34C
NO NAME	E-71C
NO NAME	RR-AT17
+15A	Z-100E
+15A	S-111E
+15A	D-31E
+15A	B-14E
+15A	B-14C
+15A	C-14E
+15A	C-14C
+15A	K-14E
+15A	K-14C
+15A	Y-7E
+15A	Y-13E
+15A	Y-15E
+15A	Y-7C
+15A	Y-13C
+15A	Y-15C
+15A	V-23C
+15A	V-24C
+15A	V-23E
+15A	V-24E
+15A	L-37C
+15A	L-37E
+15A	T-36C
+15A	T-36E
+15A	J-34C
+15A	J-34E
+5V	Z-23C
+5V	Z-60C
+5V	Z-61C
+5V	Z-78E
+5V	1I-2C
+5V	1I-53C
+5V	1I-2E
+5V	2I-61C
+5V	2I-112C
+5V	2I-61E
+5V	P-13E
+5V	P-27E
+5V	E-67E
+5V	S-114C
+5V	D-4E
+5V	D-87E
+5V	D-87C
+5V	B-84E
+5V	B-84C
+5V	C-86E
+5V	C-86C
+5V	K-86E
+5V	K-86C

Signal Name	Connection
+5V	Y-76E
+5V	Y-76C
+5V	V-5C
+5V	V-6C
+5V	V-5E
+5V	V-6E
+5V	N-35C
+5V	N-35E
+5V	Q-34C
+5V	Q-35E
+5V	L-34C
+5V	L-34E
+5V	T-33C
+5V	T-33E
+5V	J-32C
+5V	J-32E
+5V	RR-AT9
+8V	J-37C
+8V	J-37E
+8VOLTS MAT2	V-7C
+8VOLTS MAT2	V-8C
+8VOLTS MAT2	V-7E
+8VOLTS MAT2	V-8E
+8VOLTS MAT2	J-36C
+8VOLTS MAT2	J-36E
+10V	B-87E
+10V	B-87C
+10V	K-88E
+10V	K-88C
+10V	V-37C
+10V	V-38C
+10V	V-37E
+10V	V-38E
+15V	Z-40C
+15V	P-8C
+15V	E-73E
+15V	S-114E
+15V	D-89E
+15V	D-89C
+15V	B-88E
+15V	B-88C
+15V	C-92E
+15V	C-92C
+15V	K-89E
+15V	K-89C
+15V	Y-75E
+15V	Y-75C
+15V	N-38C
+15V	N-38E
+15V	Q-37C
+15V	L-38C
+15V	L-38E
+15V	T-37C
+15V	T-37E
+15V	RR-AT2
−15V	Z-79C
−15V	Z-39E
−15V	P-2C
−15V	S-110E
−15V	S-112E
−15V	D-32E
−15V	D-86E
−15V	D-86C
−15V	B-15E
−15V	B-80E
−15V	B-15C
−15V	B-80C
−15V	C-15E
−15V	C-15C
−15V	K-15E
−15V	K-85E

File Courtesy of GRWiki.org

Signal Name	Connection
−15V	K-15C
−15V	K-85C
−15V	Y-6E
−15V	Y-8E
−15V	Y-14E
−15V	Y-91E
−15V	Y-6C
−15V	Y-8C
−15V	Y-14C
−15V	Y-91C
−15V	V-18C
−15V	V-19C
−15V	V-18E
−15V	V-19E
−15V	N-36C
−15V	N-36E
−15V	Q-35C
−15V	Q-36E
−15V	L-35C
−15V	L-35E
−15V	T-34C
−15V	T-34E
−15V	J-33C
−15V	J-33E
−15V	RR-AT4

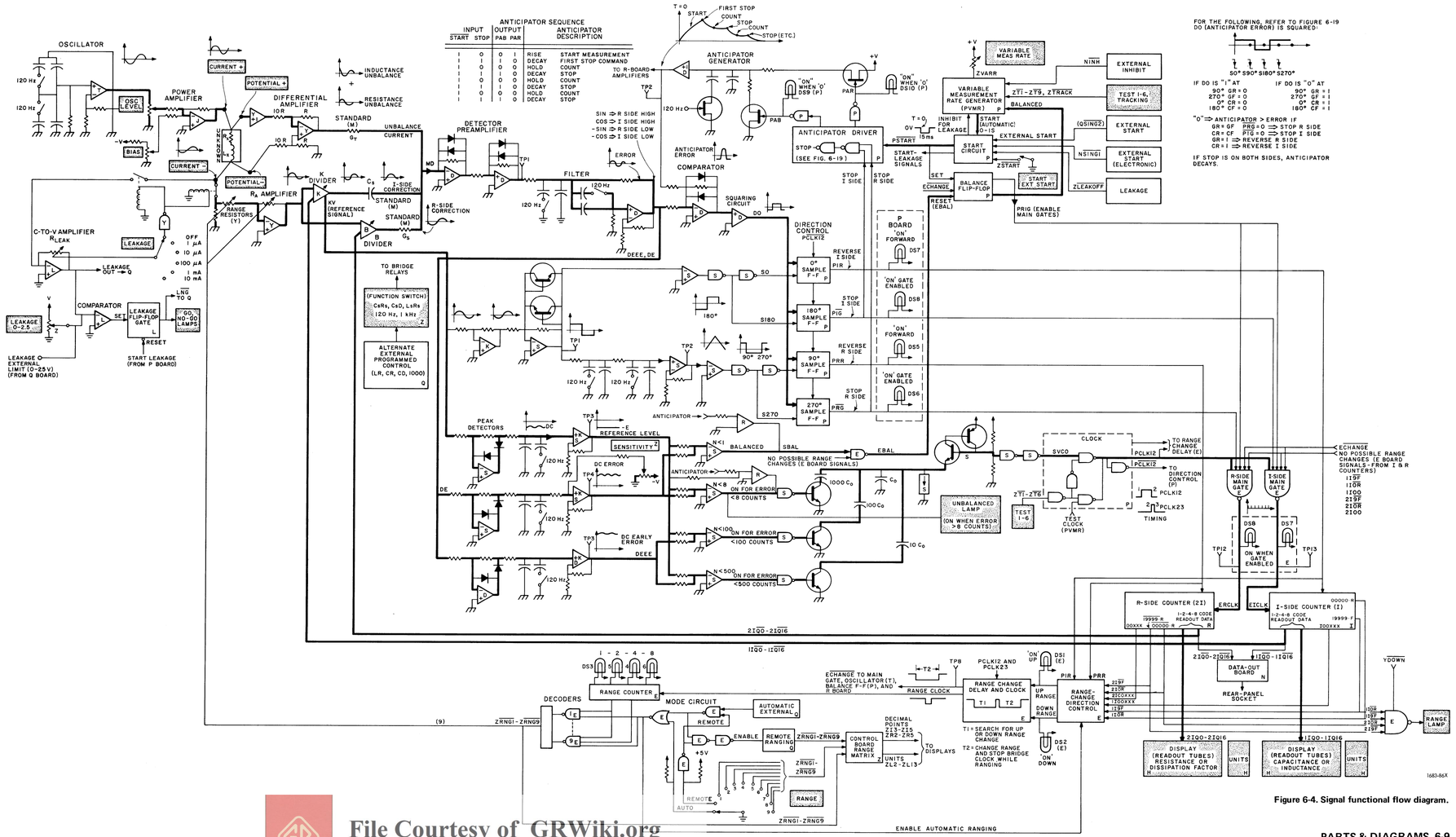

Figure 6-4. Signal functional flow diagram.

File Courtesy of GRWiki.org

ELECTRICAL PARTS LIST

DIVIDER PC BOARD B P/N 1683-4700

REFDES	DESCRIPTION	PART NO.	FMC	MFGR PART NUMBER
C 4	CAP CER DISC .02UF 80/20PCT 100V	4402-3200	56289	55C21 .02UF
C 5	CAP TANT 15 UF 20PCT 20V	4450-5200	56289	150D156X0020B2
C 6	CAP CER DISC 470PF 5PCT 500V	4404-1475	72982	0831082Z5D0471J
C 8	CAP TANT 68 UF 20PCT 15V	4450-5615	56289	150D686X0015R2
C 9	CAP CER DISC .02UF 80/20PCT 100V	4402-3200	56289	55C21 .02UF
C 12	CAP CER DISC 1000PF 80/20PCT 500	4404-2109	72982	0831082Z5D0102Z
C 13	CAP CER TUB 2.7 PF 10PCT 500V	4400-0279	95121	QC 2.7PF 10PCT 500V
C 14	CAP CER TUB 10 PF 10PCT 500V	4400-1100	95121	QC 10PF 10PCT 500V
C 15	CAP CER TRIM 5-25 PF	4910-1150	72982	557-051 A 5-25PF
C 18	CAP CER TUB 1.8PF 5PCT 500V	4400-0180	95121	QC 1.8PF 5PCT 500V
C 19	CAP CER TUB 1.8PF 5PCT 500V	4400-0180	95121	QC 1.8PF 5PCT 500V
C 20	CAP CER TUB .47 PF 10PCT 500V	4400-1200	95121	QC 0.47PF 10PCT 500
C 21	CAP CER TUB .47 PF 10PCT 500V	4400-1200	95121	QC 0.47PF 10PCT 500
C 24	CAP CER SQ .10UF 80/20PCT 100V	4403-4100	72982	8131N1006511104Z
C 25	CAP CER MONO 1UF 20PCT 50VGP	4400-2070	72982	8131-M050-651-105M
CR 1	DIODE 1N4151 75PIV IR.1UA SI	6082-1001	14433	1N3604
CR 2	DIODE 1N4151 75PIV IR.1UA SI	6082-1001	14433	1N3604
CR 3	DIODE 1N4151 75PIV IR.1UA SI	6082-1001	14433	1N3604
CR 4	DIODE 1N695 20PIV IR 20UA GE	6082-1014	14433	1N695
CR 5	DIODE 1N695 20PIV IR 20UA GE	6082-1014	14433	1N695
CR 6	DIODE 1N4151 75PIV IR.1UA SI	6082-1001	14433	1N3604
CR 7	DIODE 1N695 20PIV IR 20UA GE	6082-1014	14433	1N695
CR 8	DIODE 1N695 20PIV IR 20UA GE	6082-1014	14433	1N695
CR 9	DIODE 1N4151 75PIV IR.1UA SI	6082-1001	14433	1N3604
CR 10	DIODE 1N4151 75PIV IR.1UA SI	6082-1001	14433	1N3604
CR 11	DIODE 1N4151 75PIV IR.1UA SI	6082-1001	14433	1N3604
CR 12	DIODE 1N695 20PIV IR 20UA GE	6082-1014	14433	1N695
CR 13	DIODE 1N695 20PIV IR 20UA GE	6082-1014	14433	1N695
CR 14	DIODE 1N4151 75PIV IR.1UA SI	6082-1001	14433	1N3604
CR 15	DIODE 1N695 20PIV IR 20UA GE	6082-1014	14433	1N695
CR 16	DIODE 1N695 20PIV IR 20UA GE	6082-1014	14433	1N695
CR 17	DIODE 1N4151 75PIV IR.1UA SI	6082-1001	14433	1N3604
CR 18	DIODE 1N4151 75PIV IR.1UA SI	6082-1001	14433	1N3604
CR 19	DIODE 1N4151 75PIV IR.1UA SI	6082-1001	14433	1N3604
CR 20	DIODE 1N695 20PIV IR 20UA GE	6082-1014	14433	1N695
CR 21	DIODE 1N695 20PIV IR 20UA GE	6082-1014	14433	1N695
CR 22	DIODE 1N4151 75PIV IR.1UA SI	6082-1001	14433	1N3604
CR 23	DIODE 1N695 20PIV IR 20UA GE	6082-1014	14433	1N695
CR 24	DIODE 1N695 20PIV IR 20UA GE	6082-1014	14433	1N695
CR 25	DIODE 1N4151 75PIV IR.1UA SI	6082-1001	14433	1N3604
CR 26	DIODE 1N4151 75PIV IR.1UA SI	6082-1001	14433	1N3604
CR 27	DIODE 1N4151 75PIV IR.1UA SI	6082-1001	14433	1N3604
CR 28	DIODE 1N695 20PIV IR 20UA GE	6082-1014	14433	1N695
CR 29	DIODE 1N695 20PIV IR 20UA GE	6082-1014	14433	1N695
CR 30	DIODE 1N4151 75PIV IR.1UA SI	6082-1001	14433	1N3604
CR 31	DIODE 1N695 20PIV IR 20UA GE	6082-1014	14433	1N695
CR 32	DIODE 1N695 20PIV IR 20UA GE	6082-1014	14433	1N695
CR 33	DIODE 1N4151 75PIV IR.1UA SI	6082-1001	14433	1N3604
CR 36	DIODE 1N4151 75PIV IR.1UA SI	6082-1001	14433	1N3604
CR 37	DIODE 1N4151 75PIV IR.1UA SI	6082-1001	14433	1N3604
CR 52	DIODE 1N4151 75PIV IR.1UA SI	6082-1001	14433	1N3604
CR 53	DIODE 1N4151 75PIV IR.1UA SI	6082-1001	14433	1N3604
CR 54	ZENER 1N759A 12V 5PCT .4W	6083-1014	14433	1N759A
IC 1	ICD DTUL936 14D INVERTER	5431-9362	01295	SN15836N
KL 24	RELAY COIL 15V 125AMP-TURNS	6090-1130	24655	6090-1130
KL 25	RELAY COIL 15V 125AMP-TURNS	6090-1130	24655	6090-1130
KL 26	RELAY COIL 15V 125AMP-TURNS	6090-1130	24655	6090-1130
KL 30	RELAY COIL 15V 125AMP-TURNS	6090-1130	24655	6090-1130
KL 39	RELAY COIL 15V 125AMP-TURNS	6090-1130	24655	6090-1130
KS 24	SWITCH REED FORM A DRY	6090-0800	24655	6090-0800
KS 25	SWITCH REED FORM A DRY	6090-0800	24655	6090-0800
KS 26	SWITCH REED FORM A DRY	6090-0800	24655	6090-0800
KS 30	SWITCH REED FORM A DRY	6090-0800	24655	6090-0800
KS 39	SWITCH REED FORM A DRY	6090-0800	24655	6090-0800
Q 1	TRANSISTOR 2N4125	8210-1125	04713	2N4125
Q 2	TRANSISTOR 2N4125	8210-1125	04713	2N4125
Q 3	TRANSISTOR 2N4125	8210-1125	04713	2N4125
Q 4	TRANSISTOR 2N4125	8210-1125	04713	2N4125
Q 5	TRANSISTOR 2N4125	8210-1125	04713	2N4125
Q 6	TRANSISTOR 2N4125	8210-1125	04713	2N4125

ELECTRICAL PARTS LIST (cont)

DIVIDER PC BOARD B P/N 1683-4700

REFDES	DESCRIPTION	PART NO.	FMC	MFGR PART NUMBER
Q 7	TRANSISTOR 2N4125	8210-1125	04713	2N4125
Q 8	TRANSISTOR 2N4125	8210-1125	04713	2N4125
Q 9	TRANSISTOR 2N4125	8210-1125	04713	2N4125
Q 10	TRANSISTOR 2N4125	8210-1125	04713	2N4125
Q 11	TRANSISTOR 2N4125	8210-1125	04713	2N4125
Q 12	TRANSISTOR 2N4125	8210-1125	04713	2N4125
Q 13	TRANSISTOR 2N4125	8210-1125	04713	2N4125
Q 14	TRANSISTOR 2N4125	8210-1125	04713	2N4125
Q 15	TRANSISTOR 2N4125	8210-1125	04713	2N4125
Q 16	TRANSISTOR 2N4125	8210-1125	04713	2N4125
Q 17	TRANSISTOR 2N4125	8210-1125	04713	2N4125
Q 18	TRANSISTOR	8210-1174	24655	8210-1174
Q 19	TRANSISTOR	8210-1174	24655	8210-1174
Q 20	TRANSISTOR	8210-1174	24655	8210-1174
Q 21	TRANSISTOR	8210-1174	24655	8210-1174
Q 22	TRANSISTOR	8210-1174	24655	8210-1174
Q 23	TRANSISTOR 2N1302	8210-1018	01295	2N1302
Q 24	TRANSISTOR 2N1302	8210-1018	01295	2N1302
Q 25	TRANSISTOR 2N1302	8210-1018	01295	2N1302
Q 26	TRANSISTOR 2N1302	8210-1018	01295	2N1302
Q 27	TRANSISTOR 2N1302	8210-1018	01295	2N1302
Q 28	TRANSISTOR 2N1302	8210-1018	01295	2N1302
Q 29	TRANSISTOR 2N1302	8210-1018	01295	2N1302
Q 30	TRANSISTOR 2N1302	8210-1018	01295	2N1302
Q 31	TRANSISTOR 2N1302	8210-1018	01295	2N1302
Q 32	TRANSISTOR 2N1302	8210-1018	01295	2N1302
Q 33	TRANSISTOR 2N1302	8210-1018	01295	2N1302
Q 34	TRANSISTOR 2N1302	8210-1018	01295	2N1302
Q 35	TRANSISTOR	8210-1081	24655	8210-1081
Q 36	TRANSISTOR	8210-1081	24655	8210-1081
Q 37	TRANSISTOR	8210-1081	24655	8210-1081
Q 38	TRANSISTOR	8210-1081	24655	8210-1081
Q 39	TRANSISTOR	8210-1081	24655	8210-1081
Q 40	TRANSISTOR 2N1303	8210-1019	01295	2N1303
Q 41	TRANSISTOR 2N1303	8210-1019	01295	2N1303
Q 42	TRANSISTOR 2N1303	8210-1019	01295	2N1303
Q 43	TRANSISTOR 2N1303	8210-1019	01295	2N1303
Q 44	TRANSISTOR 2N1303	8210-1019	01295	2N1303
Q 45	TRANSISTOR 2N1303	8210-1019	01295	2N1303
Q 46	TRANSISTOR 2N1303	8210-1019	01295	2N1303
Q 47	TRANSISTOR 2N1303	8210-1019	01295	2N1303
Q 48	TRANSISTOR 2N1303	8210-1019	01295	2N1303
Q 49	TRANSISTOR 2N1303	8210-1019	01295	2N1303
Q 50	TRANSISTOR 2N1303	8210-1019	01295	2N1303
Q 51	TRANSISTOR 2N1303	8210-1019	01295	2N1303
Q 52	TRANSISTOR TO-100	8210-1130	56289	TO-100
Q 54	TRANSISTOR 2N6008	8210-1083	03508	2N6008
Q 55	TRANSISTOR 2N4250	8210-1135	07263	2N4250
Q 56	TRANSISTOR 2N4123	8210-1123	04713	2N4123
Q 59	TRANSISTOR 2N3414	8210-1047	03508	2N3414
Q 60	TRANSISTOR 2N3414	8210-1047	03508	2N3414
Q 61	TRANSISTOR 2N3414	8210-1047	03508	2N3414
Q 62	TRANSISTOR 2N3414	8210-1047	03508	2N3414
R 1	RES COMP 2.7 K 5PCT 1/4W	6099-2275	81349	RCR07G272J
R 2	RES COMP 2.7 K 5PCT 1/4W	6099-2275	81349	RCR07G272J
R 3	RES COMP 2.7 K 5PCT 1/4W	6099-2275	81349	RCR07G272J
R 4	RES COMP 2.7 K 5PCT 1/4W	6099-2275	81349	RCR07G272J
R 5	RES COMP 2.7 K 5PCT 1/4W	6099-2275	81349	RCR07G272J
R 6	RES COMP 18 K 5PCT 1/4W	6099-3185	81349	RCR07G183J
R 7	RES COMP 18 K 5PCT 1/4W	6099-3185	81349	RCR07G183J
R 8	RES COMP 18 K 5PCT 1/4W	6099-3185	81349	RCR07G183J
R 9	RES COMP 18 K 5PCT 1/4W	6099-3185	81349	RCR07G183J
R 10	RES COMP 18 K 5PCT 1/4W	6099-3185	81349	RCR07G183J
R 11	RES COMP 18 K 5PCT 1/4W	6099-3185	81349	RCR07G183J
R 12	RES COMP 18 K 5PCT 1/4W	6099-3185	81349	RCR07G183J
R 13	RES COMP 18 K 5PCT 1/4W	6099-3185	81349	RCR07G183J
R 14	RES COMP 18 K 5PCT 1/4W	6099-3185	81349	RCR07G183J
R 15	RES COMP 18 K 5PCT 1/4W	6099-3185	81349	RCR07G183J
R 16	RES COMP 18 K 5PCT 1/4W	6099-3185	81349	RCR07G183J
R 17	RES COMP 18 K 5PCT 1/4W	6099-3185	81349	RCR07G183J
R 18	RES COMP 2.4 K OHM 5PCT 1/4W	6099-2245	81349	RCR07G242J
R 19	RES COMP 2.4 K OHM 5PCT 1/4W	6099-2245	81349	RCR07G242J
R 20	RES COMP 2.4 K OHM 5PCT 1/4W	6099-2245	81349	RCR07G242J
R 21	RES COMP 2.4 K OHM 5PCT 1/4W	6099-2245	81349	RCR07G242J

ELECTRICAL PARTS LIST (cont)

DIVIDER PC BOARD B P/N 1683-4700

REFDES	DESCRIPTION	PART NO.	FMC	MFGR PART NUMBER
R 22	RES COMP 2.4 K OHM 5PCT 1/4W	6099-2245	81349	RCR07G242J
R 23	RES COMP 16 K OHM 5PCT 1/4W	6099-3165	81349	RCR07G163J
R 24	RES COMP 16 K OHM 5PCT 1/4W	6099-3165	81349	RCR07G163J
R 25	RES COMP 16 K OHM 5PCT 1/4W	6099-3165	81349	RCR07G163J
R 26	RES COMP 16 K OHM 5PCT 1/4W	6099-3165	81349	RCR07G163J
R 27	RES COMP 16 K OHM 5PCT 1/4W	6099-3165	81349	RCR07G163J
R 28	RES COMP 16 K OHM 5PCT 1/4W	6099-3165	81349	RCR07G163J
R 29	RES COMP 16 K OHM 5PCT 1/4W	6099-3165	81349	RCR07G163J
R 30	RES COMP 16 K OHM 5PCT 1/4W	6099-3165	81349	RCR07G163J
R 31	RES COMP 16 K OHM 5PCT 1/4W	6099-3165	81349	RCR07G163J
R 32	RES COMP 16 K OHM 5PCT 1/4W	6099-3165	81349	RCR07G163J
R 33	RES COMP 16 K OHM 5PCT 1/4W	6099-3165	81349	RCR07G163J
R 34	RES COMP 16 K OHM 5PCT 1/4W	6099-3165	81349	RCR07G163J
R 35	RES COMP 1.0 M 5PCT 1/4W	6099-5105	81349	RCR07G105J
R 36	RES COMP 1.0 M 5PCT 1/4W	6099-5105	81349	RCR07G105J
R 37	RES COMP 1.0 M 5PCT 1/4W	6099-5105	81349	RCR07G105J
R 38	RES COMP 1.0 M 5PCT 1/4W	6099-5105	81349	RCR07G105J
R 39	RES COMP 1.0 M 5PCT 1/4W	6099-5105	81349	RCR07G105J
R 40	RES COMP 27 K 5PCT 1/4W	6099-3275	81349	RCR07G273J
R 41	RES COMP 27 K 5PCT 1/4W	6099-3275	81349	RCR07G273J
R 42	RES COMP 27 K 5PCT 1/4W	6099-3275	81349	RCR07G273J
R 43	RES COMP 27 K 5PCT 1/4W	6099-3275	81349	RCR07G273J
R 44	RES COMP 27 K 5PCT 1/4W	6099-3275	81349	RCR07G273J
R 45	RES COMP 27 K 5PCT 1/4W	6099-3275	81349	RCR07G273J
R 46	RES COMP 27 K 5PCT 1/4W	6099-3275	81349	RCR07G273J
R 47	RES COMP 27 K 5PCT 1/4W	6099-3275	81349	RCR07G273J
R 48	RES COMP 27 K 5PCT 1/4W	6099-3275	81349	RCR07G273J
R 49	RES COMP 27 K 5PCT 1/4W	6099-3275	81349	RCR07G273J
R 50	RES COMP 27 K 5PCT 1/4W	6099-3275	81349	RCR07G273J
R 51	RES COMP 27 K 5PCT 1/4W	6099-3275	81349	RCR07G273J
R 52	RES COMP 1.0 M 5PCT 1/4W	6099-5105	81349	RCR07G105J
R 53	RES COMP 1.0 M 5PCT 1/4W	6099-5105	81349	RCR07G105J
R 54	RES COMP 1.0 M 5PCT 1/4W	6099-5105	81349	RCR07G105J
R 55	RES COMP 1.0 M 5PCT 1/4W	6099-5105	81349	RCR07G105J
R 56	RES COMP 1.0 M 5PCT 1/4W	6099-5105	81349	RCR07G105J
R 57	RES COMP 33 K 5PCT 1/4W	6099-3335	81349	RCR07G333J
R 58	RES COMP 33 K 5PCT 1/4W	6099-3335	81349	RCR07G333J
R 59	RES COMP 33 K 5PCT 1/4W	6099-3335	81349	RCR07G333J
R 60	RES COMP 33 K 5PCT 1/4W	6099-3335	81349	RCR07G333J
R 61	RES COMP 33 K 5PCT 1/4W	6099-3335	81349	RCR07G333J
R 62	RES COMP 33 K 5PCT 1/4W	6099-3335	81349	RCR07G333J
R 63	RES COMP 33 K 5PCT 1/4W	6099-3335	81349	RCR07G333J
R 64	RES COMP 33 K 5PCT 1/4W	6099-3335	81349	RCR07G333J
R 65	RES COMP 33 K 5PCT 1/4W	6099-3335	81349	RCR07G333J
R 66	RES COMP 33 K 5PCT 1/4W	6099-3335	81349	RCR07G333J
R 67	RES COMP 33 K 5PCT 1/4W	6099-3335	81349	RCR07G333J
R 68	RES COMP 33 K 5PCT 1/4W	6099-3335	81349	RCR07G333J
R 69	RES COMP 7.5 K OHM 5PCT 1/4W	6099-2755	81349	RCR07G752J
R 70	RES COMP 7.5 K OHM 5PCT 1/4W	6099-2755	81349	RCR07G752J
R 71	RES COMP 7.5 K OHM 5PCT 1/4W	6099-2755	81349	RCR07G752J
R 72	RES COMP 7.5 K OHM 5PCT 1/4W	6099-2755	81349	RCR07G752J
R 73	RES COMP 7.5 K OHM 5PCT 1/4W	6099-2755	81349	RCR07G752J
R 74	RES COMP 33 K 5PCT 1/4W	6099-3335	81349	RCR07G333J
R 75	RES COMP 33 K 5PCT 1/4W	6099-3335	81349	RCR07G333J
R 76	RES COMP 33 K 5PCT 1/4W	6099-3335	81349	RCR07G333J
R 77	RES COMP 33 K 5PCT 1/4W	6099-3335	81349	RCR07G333J
R 78	RES COMP 33 K 5PCT 1/4W	6099-3335	81349	RCR07G333J
R 79	RES COMP 33 K 5PCT 1/4W	6099-3335	81349	RCR07G333J
R 80	RES COMP 33 K 5PCT 1/4W	6099-3335	81349	RCR07G333J
R 81	RES COMP 33 K 5PCT 1/4W	6099-3335	81349	RCR07G333J
R 82	RES COMP 33 K 5PCT 1/4W	6099-3335	81349	RCR07G333J
R 83	RES COMP 33 K 5PCT 1/4W	6099-3335	81349	RCR07G333J
R 84	RES COMP 33 K 5PCT 1/4W	6099-3335	81349	RCR07G333J
R 85	RES COMP 33 K 5PCT 1/4W	6099-3335	81349	RCR07G333J
R 86	RES GR 40K OHM .01 PCT 1W	6983-5011	24655	6983-5011
R 88	RES GR 80K OHM .01 PCT 1W	6983-5015	24655	6983-5015
R 89	RES GR 40K OHM .01 PCT 1W	6983-5011	24655	6983-5011
R 90	RES GR 40K OHM .01 PCT 1W	6983-5011	24655	6983-5011
R 91	RES GR 40K OHM .01 PCT 1W	6983-5011	24655	6983-5011
R 92	RES GR 16.0012K OHM .01 PCT 1/2W	6982-5008	24655	6982-5008
R 93	RES GR 13.33K OHM .01 PCT 1/2W	6982-5009	24655	6982-5009
R 94	RES GR 13.33K OHM .01 PCT 1/2W	6982-5009	24655	6982-5009
R 96	RES GR 160K OHM .1 PCT 1W	6983-6011	24655	6983-6011
R 97	RES GR 80K OHM .1 PCT 1W	6983-5012	24655	6983-5012

File Courtesy of GRWiki.org

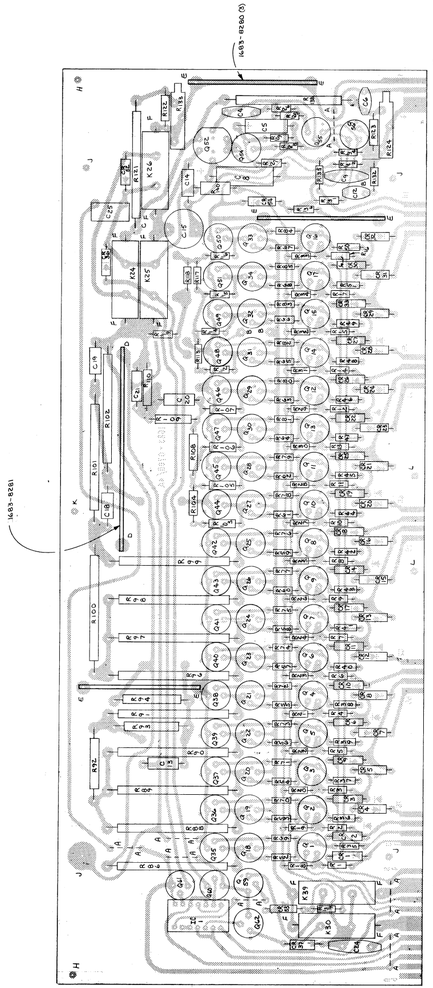

NOTE: *Orientation:* Viewed from parts side. *Part number:* Refer to caption. *Symbolism:* Outlined area = part; black ckt pattern (if any) = parts side, gray other side.

B-divider (P/N 1683-4700) etched-circuit board layout.

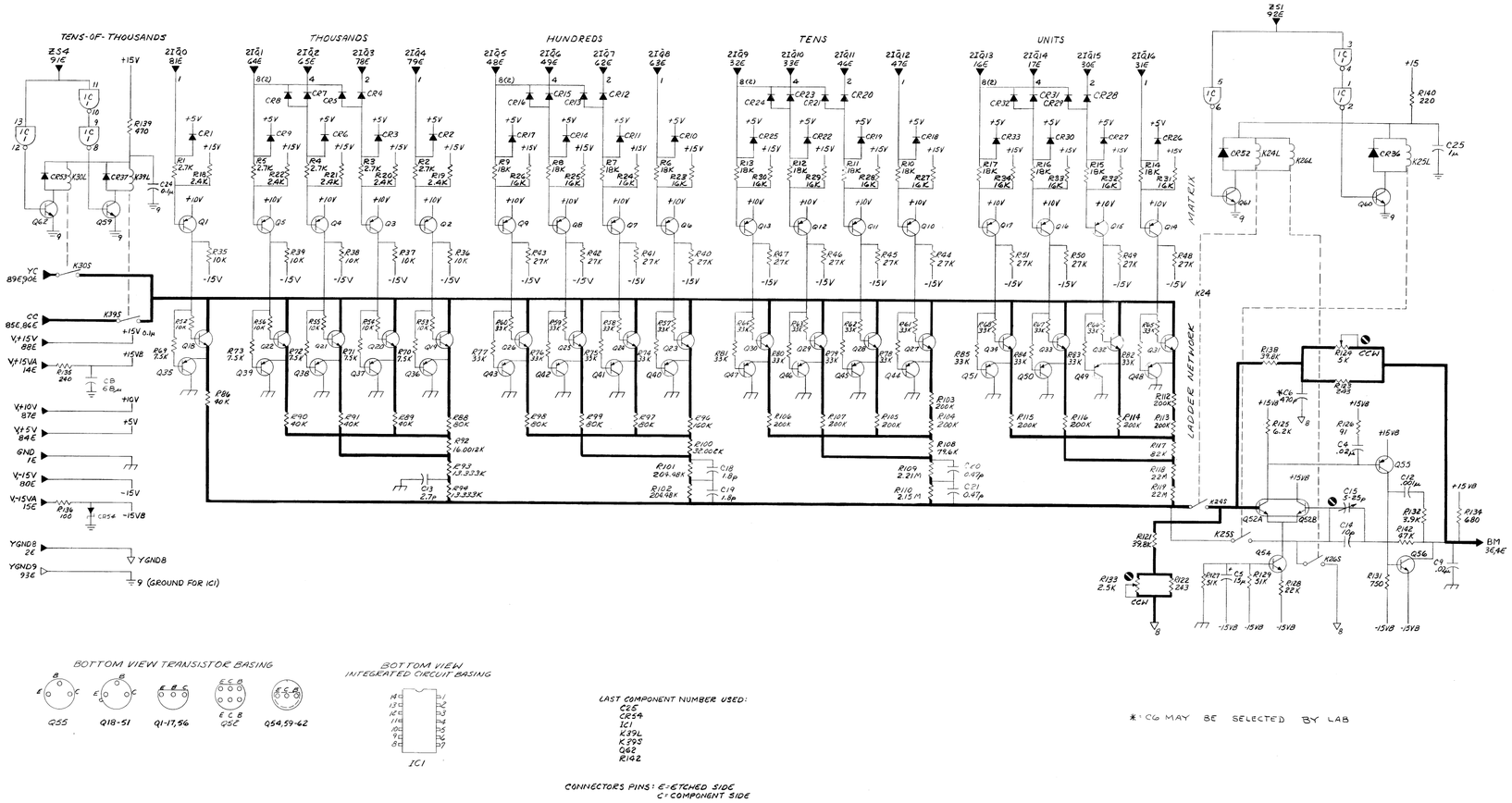

Figure 6-5. B-divider board schematic, B.

File Courtesy of GRWiki.org

ELECTRICAL PARTS LIST (cont)

DIVIDER PC BOARD B P/N 1683-4700

REFDES	DESCRIPTION	PART NO.	FMC	MFGR PART NUMBER
R 98	RES GR 80K OHM .1 PCT 1W	6983-5012	24655	6983-5012
R 99	RES GR 80K OHM .01 PCT 1W	6983-5015	24655	6983-5015
R 100	RES GR 32.002K OHM .1 PCT 1W	6983-5013	24655	6983-5013
R 101	RES GR 204.48K OHM .1 PCT 1W	6983-6010	24655	6983-6010
R 102	RES GR 204.48K OHM .1 PCT 1W	6983-6010	24655	6983-6010
R 103	RES FLM 200K 1 PCT 1/8W	6250-3200	81349	RN55D2003F
R 104	RES FLM 200K 1 PCT 1/8W	6250-3200	81349	RN55D2003F
R 105	RES FLM 200K 1 PCT 1/8W	6250-3200	81349	RN55D2003F
R 106	RES FLM 200K 1 PCT 1/8W	6250-3200	81349	RN55D2003F
R 107	RES FLM 200K 1 PCT 1/8W	6250-3200	81349	RN55D2003F
R 108	RES FLM 79.6K 1/2 PCT 1/4W	6351-2796	81349	RN60D7962D
R 109	RES FLM 2.21M 1 PCT 1/4W	6350-4221	81349	RN60D2214F
R 110	RES FLM 2.15M 1 PCT 1/4W	6350-4215	81349	RN60D2154F
R 112	RES COMP 200 K OHM 5PCT 1/4W	6099-4205	81349	RCR07G204J
R 113	RES COMP 200 K OHM 5PCT 1/4W	6099-4205	81349	RCR07G204J
R 114	RES COMP 200 K OHM 5PCT 1/4W	6099-4205	81349	RCR07G204J
R 115	RES COMP 200 K OHM 5PCT 1/4W	6099-4205	81349	RCR07G204J
R 116	RES COMP 200 K OHM 5PCT 1/4W	6099-4205	81349	RCR07G204J
R 117	RES COMP 82 K 5PCT 1/4W	6099-3825	81349	RCR07G823J
R 118	RES COMP 22 M 5PCT 1/4W	6099-6225	81349	RCR07G226J
R 119	RES COMP 22 M 5PCT 1/4W	6099-6225	81349	RCR07G226J
R 121	RES GR 39.8K OHM .01 PCT 1W	6983-5014	24655	6983-5014
R 122	RES FLM 243 OHM 1 PCT 1/8W	6250-0243	81349	RN55D2430F
R 123	RES FLM 243 OHM 1 PCT 1/8W	6250-0243	81349	RN55D2430F
R 124	POT WW TRM 5K OHM 10 PCT 20T	6051-2509	80294	3005P-1-502
R 125	RES COMP 6.2 K OHM 5PCT 1/4W	6099-2625	81349	RCR07G622J
R 126	RES COMP 91 OHM 5PCT 1/4W	6099-0915	81349	RCR07G910J
R 127	RES COMP 51 K OHM 5PCT 1/4W	6099-3515	81349	RCR07G513J
R 128	RES COMP 22 K 5PCT 1/4W	6099-3225	81349	RCR07G223J
R 129	RES COMP 51 K OHM 5PCT 1/4W	6099-3515	81349	RCR07G513J
R 131	RES COMP 750 OHM 5PCT 1/4W	6099-1755	81349	RCR07G751J
R 132	RES COMP 3.9 K 5PCT 1/4W	6099-2395	81349	RCR07G392J
R 133	POT WW TRM 2.5K OHM 10 PCT 20T	6051-2259	80294	3005P-1-252
R 134	RES COMP 680 OHM 5PCT 1/4W	6099-1685	81349	RCR07G681J
R 135	RES COMP 240 OHM 5PCT 1/4W	6099-1245	81349	RCR07G241J
R 136	RES COMP 100 OHM 5PCT 1/4W	6099-1105	81349	RCR07G101J
R 138	RES GR 39.8K OHM .01 PCT 1W	6983-5014	24655	6983-5014
R 139	RES COMP 470 OHM 5PCT 1/4W	6099-1475	81349	RCR07G471J
R 140	RES COMP 220 OHM 5PCT 1/2W	6100-1225	81349	RCR20G221J
R 142	RES COMP 47 K 5PCT 1/4W	6099-3475	81349	RCR07G473J

ELECTRICAL PARTS LIST

DIVIDER PC BOARD C P/N 1683-4718

REFDES	DESCRIPTION	PART NO.	FMC	MFGR PART NUMBER
C 4	CAP CER DISC 180PF 10PCT 500V	4404-1188	72982	0831082Z5D00181J
C 5	CAP CER DISC .02UF 80/20PCT 100V	4402-3200	56289	55C21 .02UF
C 6	CAP TANT 15 UF 20PCT 20V	4450-5200	56289	150D156X0020B2
C 7	CAP CER DISC 1000PF 80/20PCT 500	4404-2109	72982	0831082Z5U00102Z
C 8	CAP CER DISC .02UF 80/20PCT 100V	4402-3200	56289	55C21 .02UF
C 10	CAP TANT 68 UF 20PCT 15V	4450-5615	56289	150D686X0015R2
C 12	CAP TANT 68 UF 20PCT 15V	4450-5615	56289	150D686X0015R2
C 13	CAP CER TUB 5.1PF 5PCT 500V	4400-0511	95121	QC 5.1PF 5PCT 500V
C 22	CAP CER DISC 10PF 10PCT 500V	4404-0108	72982	0831082Z5F00100K
C 23	CAP CER SQ .10UF 80/20PCT 100V	4403-4100	72982	8131M100651104Z
C 24	CAP CER TUB .68 PF 10PCT 500V	4400-0068	95121	QC 0.68PF 10PCT 500
CR 1	DIODE 1N4151 75PIV IR.1UA SI	6082-1001	14433	1N3604
CR 2	DIODE 1N4151 75PIV IR.1UA SI	6082-1001	14433	1N3604
IC 1	ICD DTUL936 14D INVERTER	5431-9362	01295	SN15836N
KL 29	RELAY COIL 15V 125AMP-TURNS	6090-1130	24655	6090-1130
KL 40	RELAY COIL 15V 125AMP-TURNS	6090-1130	24655	6090-1130
KS 29	SWITCH REED FORM A DRY	6090-0800	24655	6090-0800
KS 40	SWITCH REED FORM A DRY	6090-0800	24655	6090-0800
Q 18	TRANSISTOR	8210-1174	24655	8210-1174
Q 19	TRANSISTOR	8210-1174	24655	8210-1174
Q 20	TRANSISTOR	8210-1174	24655	8210-1174
Q 21	TRANSISTOR	8210-1174	24655	8210-1174
Q 22	TRANSISTOR	8210-1174	24655	8210-1174
Q 23	TRANSISTOR 2N1302	8210-1018	01295	2N1302
Q 24	TRANSISTOR 2N1302	8210-1018	01295	2N1302
Q 25	TRANSISTOR 2N1302	8210-1018	01295	2N1302
Q 26	TRANSISTOR 2N1302	8210-1018	01295	2N1302
Q 27	TRANSISTOR 2N1302	8210-1018	01295	2N1302
Q 28	TRANSISTOR 2N1302	8210-1018	01295	2N1302
Q 29	TRANSISTOR 2N1302	8210-1018	01295	2N1302
Q 30	TRANSISTOR 2N1302	8210-1018	01295	2N1302
Q 31	TRANSISTOR 2N1302	8210-1018	01295	2N1302
Q 32	TRANSISTOR 2N1302	8210-1018	01295	2N1302
Q 33	TRANSISTOR 2N1302	8210-1018	01295	2N1302
Q 34	TRANSISTOR 2N1302	8210-1018	01295	2N1302
Q 35	TRANSISTOR	8210-1081	24655	8210-1081
Q 36	TRANSISTOR	8210-1081	24655	8210-1081
Q 37	TRANSISTOR	8210-1081	24655	8210-1081
Q 38	TRANSISTOR	8210-1081	24655	8210-1081
Q 39	TRANSISTOR	8210-1081	24655	8210-1081
Q 40	TRANSISTOR 2N1303	8210-1019	01295	2N1303
Q 41	TRANSISTOR 2N1303	8210-1019	01295	2N1303
Q 42	TRANSISTOR 2N1303	8210-1019	01295	2N1303
Q 43	TRANSISTOR 2N1303	8210-1019	01295	2N1303
Q 44	TRANSISTOR 2N1303	8210-1019	01295	2N1303
Q 45	TRANSISTOR 2N1303	8210-1019	01295	2N1303
Q 46	TRANSISTOR 2N1303	8210-1019	01295	2N1303
Q 47	TRANSISTOR 2N1303	8210-1019	01295	2N1303
Q 48	TRANSISTOR 2N1303	8210-1019	01295	2N1303
Q 49	TRANSISTOR 2N1303	8210-1019	01295	2N1303
Q 50	TRANSISTOR 2N1303	8210-1019	01295	2N1303
Q 51	TRANSISTOR 2N1303	8210-1019	01295	2N1303
Q 52	TRANSISTOR TD-100	8210-1130	56289	TD-100
Q 54	TRANSISTOR 2N6008	8210-1083	03508	2N6008
Q 55	TRANSISTOR 2N4250	8210-1135	07263	2N4250
Q 56	TRANSISTOR 2N4123	8210-1123	04713	2N4123
Q 59	TRANSISTOR 2N3414	8210-1047	03508	2N3414
Q 60	TRANSISTOR 2N3414	8210-1047	03508	2N3414
R 52	RES COMP 10 K 5PCT 1/4W	6099-3105	81349	RCR07G103J
R 53	RES COMP 10 K 5PCT 1/4W	6099-3105	81349	RCR07G103J
R 54	RES COMP 10 K 5PCT 1/4W	6099-3105	81349	RCR07G103J
R 55	RES COMP 10 K 5PCT 1/4W	6099-3105	81349	RCR07G103J
R 56	RES COMP 10 K 5PCT 1/4W	6099-3105	81349	RCR07G103J
R 57	RES COMP 33 K 5PCT 1/4W	6099-3335	81349	RCR07G333J
R 58	RES COMP 33 K 5PCT 1/4W	6099-3335	81349	RCR07G333J
R 59	RES COMP 33 K 5PCT 1/4W	6099-3335	81349	RCR07G333J
R 60	RES COMP 33 K 5PCT 1/4W	6099-3335	81349	RCR07G333J
R 61	RES COMP 33 K 5PCT 1/4W	6099-3335	81349	RCR07G333J
R 62	RES COMP 33 K 5PCT 1/4W	6099-3335	81349	RCR07G333J

ELECTRICAL PARTS LIST (cont)

DIVIDER PC BOARD C P/N 1683-4718

REFDES	DESCRIPTION	PART NO.	FMC	MFGR PART NUMBER
R 63	RES COMP 33 K 5PCT 1/4W	6099-3335	81349	RCR07G333J
R 64	RES COMP 33 K 5PCT 1/4W	6099-3335	81349	RCR07G333J
R 65	RES COMP 33 K 5PCT 1/4W	6099-3335	81349	RCR07G333J
R 66	RES COMP 33 K 5PCT 1/4W	6099-3335	81349	RCR07G333J
R 67	RES COMP 33 K 5PCT 1/4W	6099-3335	81349	RCR07G333J
R 68	RES COMP 33 K 5PCT 1/4W	6099-3335	81349	RCR07G333J
R 69	RES COMP 7.5 K OHM 5PCT 1/4W	6099-2755	81349	RCR07G752J
R 70	RES COMP 7.5 K OHM 5PCT 1/4W	6099-2755	81349	RCR07G752J
R 71	RES COMP 7.5 K OHM 5PCT 1/4W	6099-2755	81349	RCR07G752J
R 72	RES COMP 7.5 K OHM 5PCT 1/4W	6099-2755	81349	RCR07G752J
R 73	RES COMP 7.5 K OHM 5PCT 1/4W	6099-2755	81349	RCR07G752J
R 74	RES COMP 33 K 5PCT 1/4W	6099-3335	81349	RCR07G333J
R 75	RES COMP 33 K 5PCT 1/4W	6099-3335	81349	RCR07G333J
R 76	RES COMP 33 K 5PCT 1/4W	6099-3335	81349	RCR07G333J
R 77	RES COMP 33 K 5PCT 1/4W	6099-3335	81349	RCR07G333J
R 78	RES COMP 33 K 5PCT 1/4W	6099-3335	81349	RCR07G333J
R 79	RES COMP 33 K 5PCT 1/4W	6099-3335	81349	RCR07G333J
R 80	RES COMP 33 K 5PCT 1/4W	6099-3335	81349	RCR07G333J
R 81	RES COMP 33 K 5PCT 1/4W	6099-3335	81349	RCR07G333J
R 82	RES COMP 33 K 5PCT 1/4W	6099-3335	81349	RCR07G333J
R 83	RES COMP 33 K 5PCT 1/4W	6099-3335	81349	RCR07G333J
R 84	RES COMP 33 K 5PCT 1/4W	6099-3335	81349	RCR07G333J
R 85	RES COMP 33 K 5PCT 1/4W	6099-3335	81349	RCR07G333J
R 86	RES GR 40K OHM .01 PCT 1W	6983-5011	24655	6983-5011
R 88	RES GR 80K OHM .01 PCT 1W	6983-5015	24655	6983-5015
R 89	RES GR 40K OHM .01 PCT 1W	6983-5011	24655	6983-5011
R 90	RES GR 40K OHM .01 PCT 1W	6983-5011	24655	6983-5011
R 91	RES GR 40K OHM .01 PCT 1W	6983-5011	24655	6983-5011
R 92	RES GR 16.0012K OHM .01 PCT 1/2W	6982-5008	24655	6982-5008
R 93	RES GR 13.33K OHM .01 PCT 1/2W	6982-5009	24655	6982-5009
R 94	RES GR 13.33K OHM .01 PCT 1/2W	6982-5009	24655	6982-5009
R 96	RES GR 160K OHM .1 PCT 1W	6983-6011	24655	6983-6011
R 97	RES GR 80K OHM .1 PCT 1W	6983-5012	24655	6983-5012
R 98	RES GR 80K OHM .1 PCT 1W	6983-5012	24655	6983-5012
R 99	RES GR 80K OHM .01 PCT 1W	6983-5015	24655	6983-5015
R 100	RES GR 32.002K OHM .1 PCT 1W	6983-5013	24655	6983-5013
R 101	RES GR 204.48K OHM .1 PCT 1W	6983-6010	24655	6983-6010
R 102	RES GR 204.48K OHM .1 PCT 1W	6983-6010	24655	6983-6010
R 103	RES FLM 200K 1 PCT 1/8W	6250-3200	81349	RN55D2003F
R 104	RES FLM 200K 1 PCT 1/8W	6250-3200	81349	RN55D2003F
R 105	RES FLM 200K 1 PCT 1/8W	6250-3200	81349	RN55D2003F
R 106	RES FLM 200K 1 PCT 1/8W	6250-3200	81349	RN55D2003F
R 107	RES FLM 200K 1 PCT 1/8W	6250-3200	81349	RN55D2003F
R 108	RES FLM 79.6K 1/2 PCT 1/4W	6351-2796	81349	RN60D7962D
R 109	RES FLM 2.21M 1 PCT 1/4W	6350-4221	81349	RN60D2214F
R 112	RES COMP 200 K OHM 5PCT 1/4W	6099-4205	81349	RCR07G204J
R 113	RES COMP 200 K OHM 5PCT 1/4W	6099-4205	81349	RCR07G204J
R 114	RES COMP 200 K OHM 5PCT 1/4W	6099-4205	81349	RCR07G204J
R 115	RES COMP 200 K OHM 5PCT 1/4W	6099-4205	81349	RCR07G204J
R 116	RES COMP 200 K OHM 5PCT 1/4W	6099-4205	81349	RCR07G204J
R 117	RES COMP 82 K 5PCT 1/4W	6099-3825	81349	RCR07G823J
R 118	RES COMP 22 M 5PCT 1/4W	6099-6225	81349	RCR07G226J
R 119	RES COMP 22 M 5PCT 1/4W	6099-6225	81349	RCR07G226J
R 121	POT WW TRM 2.5K OHM 10 PCT 20T	6051-2259	80294	3005P-1-252
R 122	RES FLM 57.6 OHM 1 PCT 1/8W	6250-9576	81349	RN55D576F
R 123	RES GR 4.98K OHM .01 PCT 1/2W	6982-4001	24655	6982-4001
R 124	RES GR 25K OHM .01 PCT 1W	6983-5016	24655	6983-5016
R 125	POT WW TRM 20K OHM 10 PCT 20T	6051-3209	80294	3005P-1-203
R 126	RES FLM 147 OHM 1 PCT 1/8W	6250-0147	81349	RN55D1470F
R 127	RES COMP 6.2 K OHM 5PCT 1/4W	6099-2625	81349	RCR07G622J
R 128	RES COMP 22 K 5PCT 1/4W	6099-3225	81349	RCR07G223J
R 129	RES COMP 51 K OHM 5PCT 1/4W	6099-3515	81349	RCR07G513J
R 130	RES COMP 51 K OHM 5PCT 1/4W	6099-3515	81349	RCR07G513J
R 131	RES COMP 150 OHM 5PCT 1/4W	6099-1155	81349	RCR07G151J
R 133	RES COMP 240 OHM 5PCT 1/4W	6099-1245	81349	RCR07G241J
R 134	RES COMP 240 OHM 5PCT 1/4W	6099-1245	81349	RCR07G241J
R 137	RES COMP 180 OHM 5PCT 1/4W	6099-1185	81349	RCR07G181J
R 138	RES COMP 680 OHM 5PCT 1/4W	6099-1685	81349	RCR07G681J
R 139	RES COMP 750 OHM 5PCT 1/4W	6099-1755	81349	RCR07G751J
R 140	RES COMP 220 OHM 5PCT 1/2W	6100-1225	81349	RCR20G221J

File Courtesy of GRWiki.org

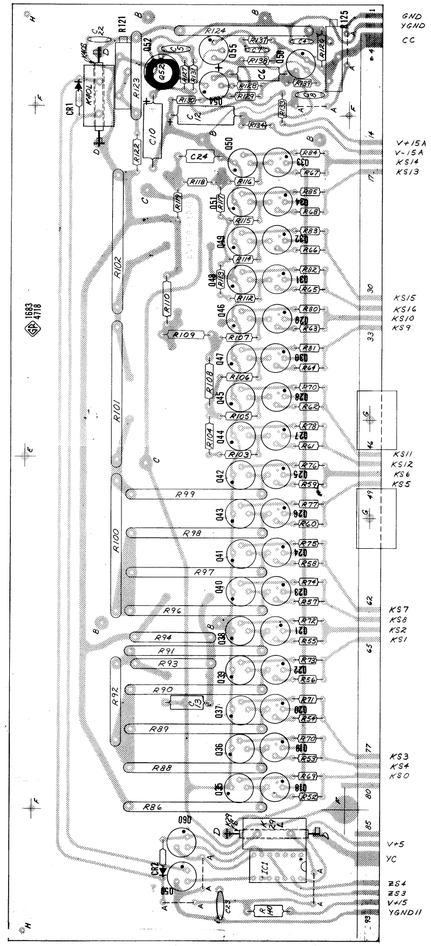

NOTE: *Orientation:* Viewed from parts side. *Part number:* Refer to caption. *Symbolism:* Outlined area = part; gray ckt pattern (if any) = parts side, black = other side. *Pins:* Separate dot (●) = collector, half dot (◖) or 1 = I-C pin 1.

C-divider (P/N 1683-4718) etched-circuit board layout

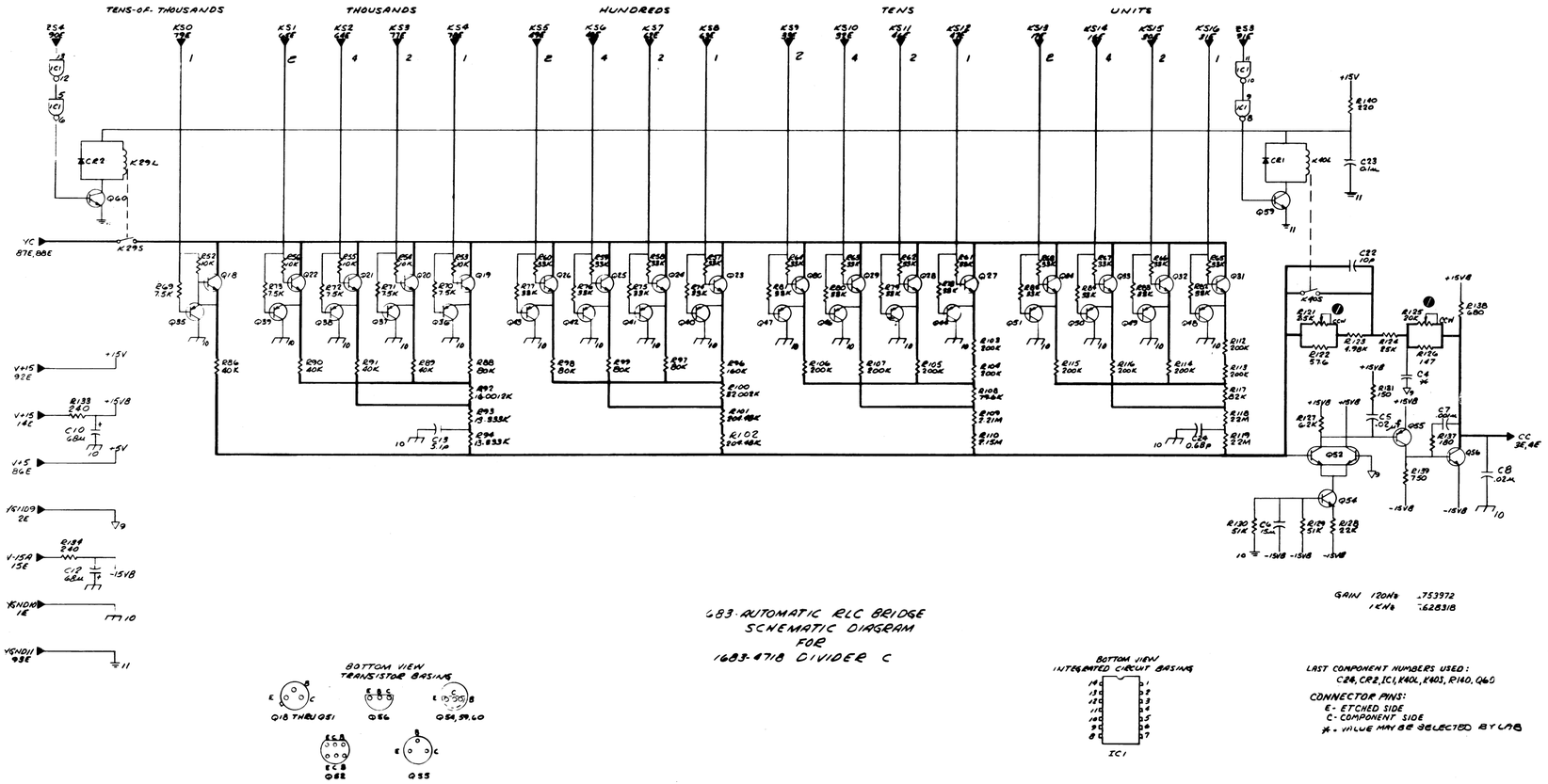

RESISTANCE IS IN OHMS, K=10^3, M=10^6
CAPACITANCE IS IN FARADS, μ=10^{-6}, p=10^{-12}
VOLTAGES EXPLAINED IN INSTRUCTION BOOK SERVICE NOTES
PANEL CONTROL, REAR CONTROL
SCREWDRIVER CONTROL, WT=WIRE TIE, TP=TEST POINT
COMPLETE REFERENCE DESIGNATION INCLUDES SUBASSEMBLY LETTER, C-R1, B-R1, ETC

SWITCH NUMBERING
4 0 4 F
FRONT, REAR
CONTACTS FIRST CONTACT CW FROM STRUT SCREW ABOVE KEY IS 01
SECTION, SECTION NEAREST PANEL IS 1.
ROTORS SHOWN CCW

CONNECTIONS
OUTPUT LEAVES SUBASSEMBLY
INPUT FROM DIFFERENT SUBASSEMBLY
OUTPUT REMAINS ON SUBASSEMBLY
INPUT FROM SAME SUBASSEMBLY

Figure 6-6. C-divider board schematic, C.

File Courtesy of GRWiki.org

ELECTRICAL PARTS LIST

DETECTOR PREAMP PC BOARD D P/N 1683-4730

REFDES	DESCRIPTION	PART NO.	FMC	MFGR PART NUMBER
C 1	CAP CER DISC 100PF 80/20PCT 500V	4404-1109	72982	0831082Z5U00101Z
C 2	CAP CER DISC.01UF 80/20PCT 500V	4406-3109	72982	0811082Z5U00103Z
C 3	CAP TANT 47 UF 20PCT 6V	4450-5500	56289	150D476X0006B2
C 4	CAP TANT 120 UF 20PCT 10V	4450-5616	56289	150D127X0010R2
C 5	CAP TANT 2.2 UF 20PCT 20V	4450-4500	56289	150D225X0020A2
C 6	CAP TANT 120 UF 20PCT 10V	4450-5616	56289	150D127X0010R2
C 7	CAP CER DISC 220PF 10PCT 500V	4404-1228	72982	0831082Z5F00221K
C 8	CAP CER DISC .01UF 80/20PCT 100V	4401-3100	72982	0805540Z5U00103Z
C 11	CAP CER DISC .01UF 80/20PCT 100V	4401-3100	72982	0805540Z5U00103Z
C 12	CAP CER DISC 100PF 80/20PCT 500V	4404-1109	72982	0831082Z5U00101Z
C 13	CAP CER DISC 100PF 80/20PCT 500V	4404-1109	72982	0831082Z5U00101Z
C 14	CAP MYLAR .75 UF 5PCT 100V	4860-8006	56289	410P 0.75 UF 5PCT
C 15	CAP MYLAR .1 UF 5PCT 100V	4860-8254	56289	410P 0.1 UF 5PCT
C 16	CAP CER DISC 100PF 80/20PCT 500V	4404-1109	72982	0831082Z5U00101Z
C 17	CAP MYLAR .01UF 2 PCT 100V	4860-7650	56289	410P .01 UF 2PCT
C 18	CAP MYLAR .0787UF 1 PCT 100V	4860-7910	56289	410P .0787 UF 1PCT
C 19	CAP MYLAR .01UF 2 PCT 100V	4860-7650	56289	410P .01 UF 2PCT
C 20	CAP MYLAR .0787UF 1 PCT 100V	4860-7910	56289	410P .0787 UF 1PCT
C 21	CAP CER DISC 39PF 10PCT 500V	4404-0398	72982	0831082Z5D00390K
C 23	CAP TANT 68 UF 20PCT 15V	4450-5615	56289	150D686X0015R2
C 24	CAP CER DISC 39PF 10PCT 500V	4404-0398	72982	0831082Z5D00390K
C 25	CAP TANT 68 UF 20PCT 15V	4450-5615	56289	150D686X0015R2
C 26	CAP TANT 68 UF 20PCT 15V	4450-5615	56289	150D686X0015R2
C 27	CAP TANT 330 UF 10PCT 6V	4450-5708	56289	150D337X9006S2
C 28	CAP CER DISC.01UF 80/20PCT 500V	4406-3109	72982	0811082Z5U00103Z
C 29	CAP TANT 3.3 UF 20PCT 15V	4450-4600	56289	150D335X0015A2
C 30	CAP TANT 1.0 UF 20PCT 35V	4450-4300	56289	150D105X0035A2
C 31	CAP TANT 6.8 UF 20PCT 35V	4450-5000	56289	150D685X0035B2
C 34	CAP CER DISC 39PF 10PCT 500V	4404-0398	72982	0831082Z5D00390K
C 35	CAP CER DISC 39PF 10PCT 500V	4404-0398	72982	0831082Z5D00390K
C 36	CAP CER DISC 39PF 10PCT 500V	4404-0398	72982	0831082Z5D00390K
C 37	CAP CER SQ .10UF 80/20PCT 100V	4403-4100	72982	8131M100651104Z
C 38	CAP CER MONO 1UF 20PCT 50VGP	4400-2070	72982	8131-M050-651-105M
C 40	CAP TANT 47 UF 20PCT 6V	4450-5500	56289	150D476X0006B2
C 41	CAP CER DISC 220PF 10PCT 500V	4404-1228	72982	0831082Z5F00221K
C 42	CAP CER MONO 2.2UF 20PCT 50VGP	4400-2080	72982	8141-M050-651-225M
C 43	CAP CER SQ .10UF 80/20PCT 100V	4403-4100	72982	8131M100651104Z
C 44	CAP CER SQ .10UF 80/20PCT 100V	4403-4100	72982	8131M100651104Z
C 46	CAP CER MONO 0.1UF 20PCT 50VGP	4400-2050	72982	8131-M050-651-104M
C 47	CAP CER MONO 2.2UF 20PCT 50VGP	4400-2080	72982	8141-M050-651-225M
C 48	CAP CER MONO 0.1UF 20PCT 50VGP	4400-2050	72982	8131-M050-651-104M
C 49	CAP CER DISC 330PF 10PCT 500V	4404-1338	72982	0831082Z5F00331K
C 50	CAP CER MONO 2.2UF 20PCT 50VGP	4400-2080	72982	8141-M050-651-225M
CR 1	DIODE 1N4151 75PIV IR.1UA SI	6082-1001	14433	1N3604
CR 2	DIODE 1N4151 75PIV IR.1UA SI	6082-1001	14433	1N3604
CR 3	DIODE 1N4151 75PIV IR.1UA SI	6082-1001	14433	1N3604
CR 4	DIODE 1N4151 75PIV IR.1UA SI	6082-1001	14433	1N3604
CR 5	DIODE 1N4151 75PIV IR.1UA SI	6082-1001	14433	1N3604
CR 6	DIODE 1N4151 75PIV IR.1UA SI	6082-1001	14433	1N3604
CR 7	DIODE 1N4151 75PIV IR.1UA SI	6082-1001	14433	1N3604
CR 8	DIODE 1N4151 75PIV IR.1UA SI	6082-1001	14433	1N3604
CR 9	DIODE 1N4151 75PIV IR.1UA SI	6082-1001	14433	1N3604
CR 11	DIODE 1N4151 75PIV IR.1UA SI	6082-1001	14433	1N3604
CR 12	ZENER 1N753A 6.2V 5PCT .4W	6083-1006	14433	1N753A
CR 13	ZENER 1N748A 3.9V 5PCT .4W	6083-1002	14433	1N748A
CR 14	DIODE 1N4151 75PIV IR.1UA SI	6082-1001	14433	1N3604
CR 15	DIODE 1N4151 75PIV IR.1UA SI	6082-1001	14433	1N3604
CR 16	DIODE 1N695 20PIV IR 20UA GE	6082-1014	14433	1N695
CR 17	ZENER 1N758A 10V 5PCT .4W	6083-1012	14433	1N758A
CR 18	DIODE RECTIFIER 1N645	6082-1016	14433	1N645
CR 19	DIODE RECTIFIER 1N645	6082-1016	14433	1N645
CR 20	DIODE 1N4151 75PIV IR.1UA SI	6082-1001	14433	1N3604
CR 21	DIODE 1N4151 75PIV IR.1UA SI	6082-1001	14433	1N3604
CR 22	ZENER 1N748A 3.9V 5PCT .4W	6083-1002	14433	1N748A
CR 23	ZENER 1N746 3.3V 10PCT .4W	6083-1005	14433	1N746
CR 24	ZENER 1N746 3.3V 10PCT .4W	6083-1005	14433	1N746
CR 25	DIODE 1N4154 25PIV IR.1UA SI	6082-1012	14433	1N4154
CR 26	DIODE 1N4154 25PIV IR.1UA SI	6082-1012	14433	1N4154
CR 27	DIODE 1N4154 25PIV IR.1UA SI	6082-1012	14433	1N4154
CR 28	DIODE 1N4154 25PIV IR.1UA SI	6082-1012	14433	1N4154
CR 29	DIODE 1N4154 25PIV IR.1UA SI	6082-1012	14433	1N4154
CR 30	DIODE 1N4154 25PIV IR.1UA SI	6082-1012	14433	1N4154
CR 31	DIODE 1N4154 25PIV IR.1UA SI	6082-1012	14433	1N4154
CR 32	ZENER 1N746 3.3V 10PCT .4W	6083-1005	14433	1N746

ELECTRICAL PARTS LIST (cont)

DETECTOR PREAMP PC BOARD D P/N 1683-4730

REFDES	DESCRIPTION	PART NO.	FMC	MFGR PART NUMBER
KL 1	RELAY COIL 15V 125AMP-TURNS	6090-1130	24655	6090-1130
KL 2	RELAY COIL 15V 125AMP-TURNS	6090-1130	24655	6090-1130
KL 3	RELAY COIL 15V 125AMP-TURNS	6090-1130	24655	6090-1130
KL 4	RELAY COIL 15V 125AMP-TURNS	6090-1130	24655	6090-1130
KS 1	SWITCH REED FORM A DRY	6090-0800	24655	6090-0800
KS 2	SWITCH REED FORM A DRY	6090-0800	24655	6090-0800
KS 3	SWITCH REED FORM A DRY	6090-0800	24655	6090-0800
KS 4	SWITCH REED FORM A DRY	6090-0800	24655	6090-0800
Q 1	TRANSISTOR TD-100	8210-1130	56289	TD-100
Q 2	TRANSISTOR 2N4384	8210-1131	56289	2N4384
Q 3	TRANSISTOR 2N4250	8210-1135	07263	2N4250
Q 4	TRANSISTOR 2N5459	8210-1177	04713	2N5459
Q 5	TRANSISTOR 2N5459	8210-1177	04713	2N5459
Q 6	TRANSISTOR 2N3414	8210-1047	03508	2N3414
Q 7	TRANSISTOR 2N5459	8210-1177	04713	2N5459
Q 9	TRANSISTOR 2N3414	8210-1047	03508	2N3414
Q 10	TRANSISTOR UC-2138	8210-1178	13327	UC2138
Q 12	TRANSISTOR 2N3414	8210-1047	03508	2N3414
Q 13	TRANSISTOR 2N4275	8210-1126	07263	2N4275
Q 14	TRANSISTOR 2N3414	8210-1047	03508	2N3414
Q 16	TRANSISTOR 2N3414	8210-1047	03508	2N3414
Q 17	TRANSISTOR 2N3414	8210-1047	03508	2N3414
Q 18	TRANSISTOR 2N3414	8210-1047	03508	2N3414
Q 19	TRANSISTOR 2N3414	8210-1047	03508	2N3414
Q 20	TRANSISTOR 2N3414	8210-1047	03508	2N3414
Q 21	TRANSISTOR 2N3414	8210-1047	03508	2N3414
Q 22	TRANSISTOR 2N3414	8210-1047	03508	2N3414
Q 23	TRANSISTOR 2N3414	8210-1047	03508	2N3414
R 1	RES COMP 20 K OHM 5PCT 1/4W	6099-3205	81349	RCR07G203J
R 2	RES COMP 82 K 5PCT 1/4W	6099-3825	81349	RCR07G823J
R 3	RES COMP 27 K 5PCT 1/4W	6099-3275	81349	RCR07G273J
R 4	RES COMP 3.0 K OHM 5PCT 1/4W	6099-2305	81349	RCR07G302J
R 5	RES COMP 3.0 K OHM 5PCT 1/4W	6099-2305	81349	RCR07G302J
R 6	RES COMP 6.8 K 5PCT 1/4W	6099-2685	81349	RCR07G682J
R 7	RES COMP 62 K OHM 5PCT 1/4W	6099-3625	81349	RCR07G623J
R 8	RES COMP 62 K OHM 5PCT 1/4W	6099-3625	81349	RCR07G623J
R 9	RES COMP 3.0 K OHM 5PCT 1/4W	6099-2305	81349	RCR07G302J
R 10	RES COMP 2.4 K OHM 5PCT 1/4W	6099-2245	81349	RCR07G242J
R 11	RES COMP 2.0 K OHM 5PCT 1/4W	6099-2205	81349	RCR07G202J
R 12	RES COMP 2.4 K OHM 5PCT 1/4W	6099-2245	81349	RCR07G242J
R 14	RES COMP 4.3 K OHM 5PCT 1/4W	6099-2435	81349	RCR07G432J
R 15	RES COMP 20 K OHM 5PCT 1/4W	6099-3205	81349	RCR07G203J
R 21	RES COMP 16 K OHM 5PCT 1/4W	6099-3165	81349	RCR07G163J
R 22	RES COMP 16 K OHM 5PCT 1/4W	6099-3165	81349	RCR07G163J
R 23	RES COMP 20 K OHM 5PCT 1/4W	6099-3205	81349	RCR07G203J
R 24	RES COMP 82 K 5PCT 1/4W	6099-3825	81349	RCR07G823J
R 25	RES COMP 27 K 5PCT 1/4W	6099-3275	81349	RCR07G273J
R 26	RES COMP 20 K OHM 5PCT 1/4W	6099-3205	81349	RCR07G203J
R 27	RES COMP 27 K 5PCT 1/4W	6099-3275	81349	RCR07G273J
R 28	RES COMP 82 K 5PCT 1/4W	6099-3825	81349	RCR07G823J
R 29	RES COMP 5.6 K 5PCT 1/4W	6099-2565	81349	RCR07G562J
R 30	POT WW TRM 1K OHM 10 PCT 20T	6051-2109	80294	3005P-1-102
R 31	RES COMP 30 K OHM 5PCT 1/4W	6099-3305	81349	RCR07G303J
R 32	RES COMP 6.2 K OHM 5PCT 1/4W	6099-2625	81349	RCR07G622J
R 33	RES COMP 30 K OHM 5PCT 1/4W	6099-3305	81349	RCR07G303J
R 34	RES COMP 18 K 5PCT 1/4W	6099-3185	81349	RCR07G183J
R 35	RES COMP 2.4 K OHM 5PCT 1/4W	6099-2245	81349	RCR07G242J
R 36	RES FLM 60.4K 1 PCT 1/8W	6250-2604	81349	RN50D6042F
R 37	RES FLM 16.2K 1 PCT 1/4W	6350-2162	81349	RN60D1622F
R 38	RES FLM 1.05K 1 PCT 1/8W	6250-1105	81349	RN55D1051F
R 39	RES FLM 22.1K 1 PCT 1/8W	6250-2221	81349	RN55D2212F
R 40	RES FLM 2.94K 1 PCT 1/8W	6250-1294	81349	RN55D2941F
R 41	POT WW TRM 1K OHM 10 PCT 20T	6051-2109	80294	3005P-1-102
R 42	POT WW TRM 1K OHM 10 PCT 20T	6051-2109	80294	3005P-1-102
R 43	RES COMP 10 K 5PCT 1/4W	6099-3105	81349	RCR07G103J
R 45	RES COMP 3.0 K OHM 5PCT 1/4W	6099-2305	81349	RCR07G302J
R 50	RES COMP 360 OHM 5PCT 1/4W	6099-1365	81349	RCR07G361J
R 51	RES COMP 5.1 K OHM 5PCT 1/4W	6099-2515	81349	RCR07G512J
R 52	RES COMP 6.2 K OHM 5PCT 1/4W	6099-2625	81349	RCR07G622J
R 53	RES COMP 180 OHM 5PCT 1/4W	6099-1185	81349	RCR07G181J
R 54	RES COMP 200 OHM 5PCT 1/4W	6099-1205	81349	RCR07G201J

ELECTRICAL PARTS LIST (cont)

DETECTOR PREAMP PC BOARD D P/N 1683-4730

REFDES	DESCRIPTION	PART NO.	FMC	MFGR PART NUMBER
R 55	RES COMP 180 OHM 5PCT 1/4W	6099-1185	81349	RCR07G181J
R 61	RES COMP 5.1 K OHM 5PCT 1/4W	6099-2515	81349	RCR07G512J
R 62	RES COMP 5.1 K OHM 5PCT 1/4W	6099-2515	81349	RCR07G512J
R 63	RES COMP 5.6 K 5PCT 1/4W	6099-2565	81349	RCR07G562J
R 64	RES COMP 5.6 K 5PCT 1/4W	6099-2565	81349	RCR07G562J
R 65	RES COMP 470 OHM 5PCT 1/4W	6099-1475	81349	RCR07G471J
R 67	RES COMP 2.0 K OHM 5PCT 1/4W	6099-2205	81349	RCR07G202J
R 68	RES COMP 47 K 5PCT 1/4W	6099-3475	81349	RCR07G473J
R 69	RES COMP 1.0 K 5PCT 1/4W	6099-2105	81349	RCR07G102J
R 70	RES COMP 10 K 5PCT 1/4W	6099-3105	81349	RCR07G103J
R 71	RES COMP 1.5 K 5PCT 1/4W	6099-2155	81349	RCR07G152J
R 72	RES COMP 8.2 K 5PCT 1/4W	6099-2825	81349	RCR07G822J
R 74	RES COMP 4.3 K OHM 5PCT 1/4W	6099-2435	81349	RCR07G432J
R 75	RES COMP 5.1 M OHM 5PCT 1/4W	6099-5515	81349	RCR07G515J
R 76	POT WW TRM 20K OHM 10 PCT 20T	6051-3209	80294	3005P-1-203
R 79	RES COMP 2.7 K 5PCT 1/4W	6099-2275	81349	RCR07G272J
R 80	RES COMP 2.0 M OHM 5PCT 1/4W	6099-5205	81349	RCR07G205J
R 81	POT WW TRM 20K OHM 10 PCT 20T	6051-3209	80294	3005P-1-203
R 82	RES COMP 180 K 5PCT 1/4W	6099-4185	81349	RCR07G184J
R 83	RES COMP 3.0 K OHM 5PCT 1/4W	6099-2305	81349	RCR07G302J
R 84	RES COMP 1.0 K 5PCT 1/4W	6099-2105	81349	RCR07G102J
R 85	RES COMP 1.0 K 5PCT 1/4W	6099-2105	81349	RCR07G102J
R 86	RES COMP 220 OHM 5PCT 1/4W	6099-1225	81349	RCR07G221J
R 87	RES COMP 1.0 K 5PCT 1/4W	6099-2105	81349	RCR07G102J
R 88	RES COMP 1.8 K 5PCT 1/4W	6099-2185	81349	RCR07G182J
R 89	RES COMP 10 M 5PCT 1/4W	6099-6105	81349	RCR07G106J
R 90	RES COMP 5.1 M OHM 5PCT 1/4W	6099-5515	81349	RCR07G515J
R 91	POT WW TRM 20K OHM 10 PCT 20T	6051-3209	80294	3005P-1-203
R 92	RES COMP 10 M 5PCT 1/4W	6099-6105	81349	RCR07G106J
R 93	RES COMP 15 OHM 5PCT 1/4W	6099-0155	81349	RCR07G150J
R 94	RES COMP 15 OHM 5PCT 1/4W	6099-0155	81349	RCR07G150J
R 95	RES COMP 20 K OHM 5PCT 1/4W	6099-3205	81349	RCR07G203J
R 96	RES COMP 20 K OHM 5PCT 1/4W	6099-3205	81349	RCR07G203J
R 97	RES COMP 20 K OHM 5PCT 1/4W	6099-3205	81349	RCR07G203J
R 98	RES COMP 470 OHM 5PCT 1/2W	6100-1475	81349	RCR20G471J
R 99	RES COMP 24 K OHM 5PCT 1/4W	6099-3245	81349	RCR07G243J
R 100	RES COMP 24 K OHM 5PCT 1/4W	6099-3245	81349	RCR07G243J
R 101	RES COMP 12 K 5PCT 1/4W	6099-3125	81349	RCR07G123J
R 102	RES COMP 1.5 K 5PCT 1/4W	6099-2155	81349	RCR07G152J
R 103	RES COMP 39 K 5PCT 1/4W	6099-3395	81349	RCR07G393J
U 1	IC LINEAR UA739C	5432-1005	07263	U6E7739393
U 3	IC LINEAR LM301A	5432-1004	12040	LM301AH
U 4	IC LINEAR LM301A	5432-1004	12040	LM301AH
U 5	IC LINEAR VA710C	5432-7101	04713	MC1710CG
U 6	ICD DTUL936 14D INVERTER	5431-9362	01295	SN15836N
U 7	IC LINEAR LM301A	5432-1004	12040	LM301AH
U 8	IC LINEAR LM301A	5432-1004	12040	LM301AH
U 9	IC LINEAR LM301A	5432-1004	12040	LM301AH

File Courtesy of GRWiki.org

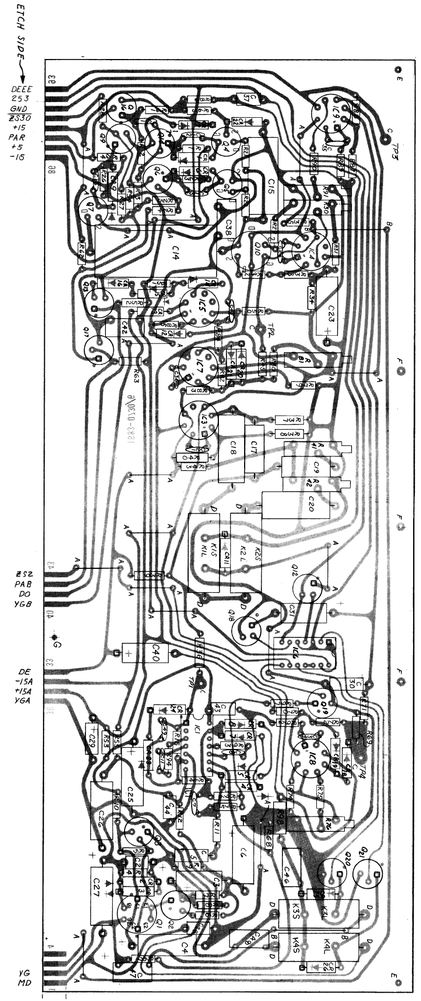

NOTE: *Orientation:* Viewed from parts side. *Part number:* Refer to caption. *Symbolism:* Outlined area = part; gray ckt pattern (if any) = parts side, black = other side.

Detector (P/N 1683-4730) etched-circuit board layout.

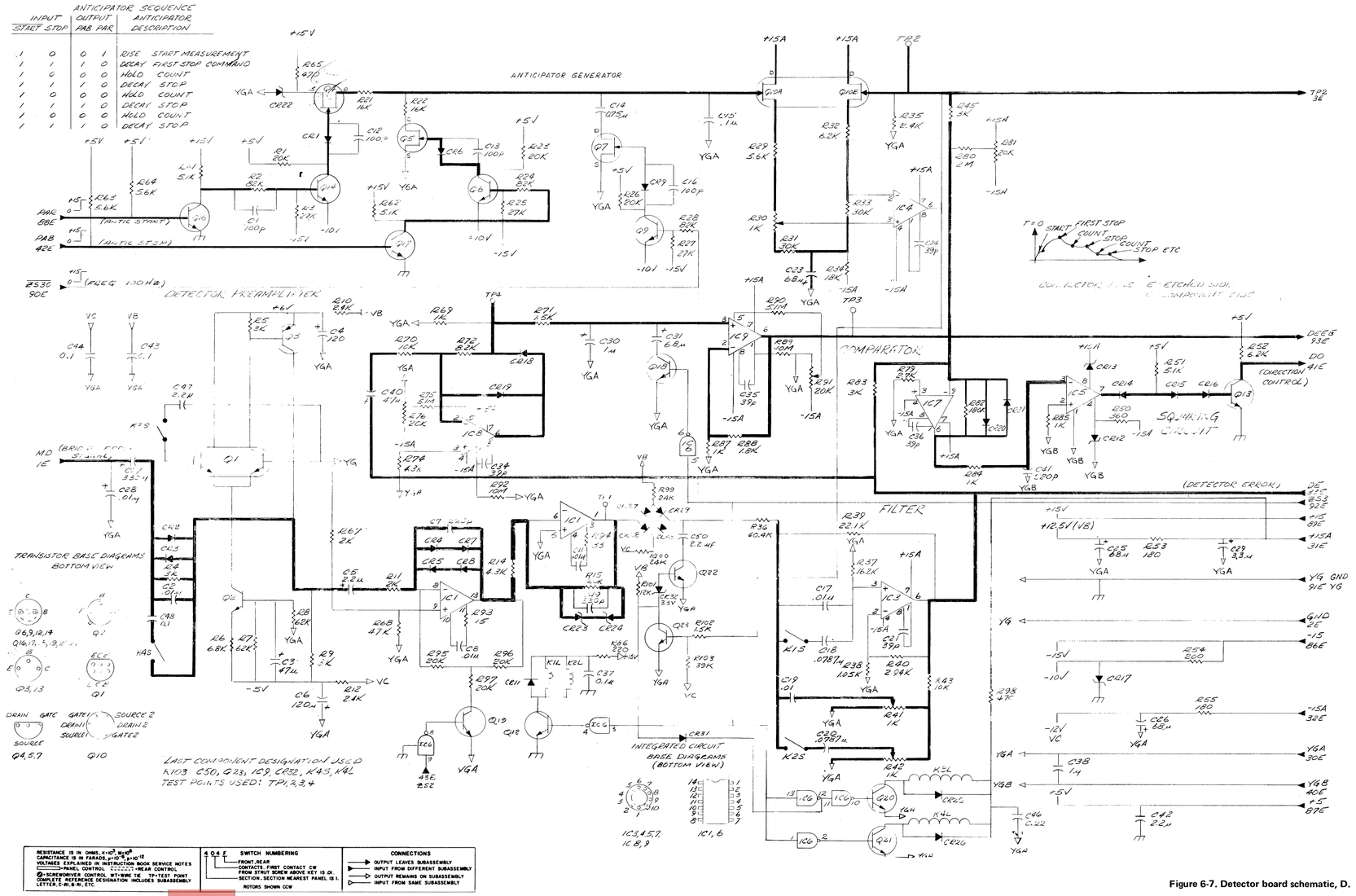

Figure 6-7. Detector board schematic, D.

File Courtesy of GRWiki.org

ELECTRICAL PARTS LIST

RANGE PC BOARD E P/N 1683-4765

REFDES		DESCRIPTION	PART NO.	FMC	MFGR PART NUMBER
C	1	CAP TANT 4.7 UF 20PCT 10V	4450-4700	56289	150D475X0010A2
C	2	CAP TANT 4.7 UF 20PCT 10V	4450-4700	56289	150D475X0010A2
C	3	CAP CER DISC.01UF 80/20PCT 500V	4406-3109	72982	0811082Z5U00103Z
C	4	CAP CER MONO 1UF 20PCT 50VSP	4400-2070	72982	8131-M050-651-105M
CR	1	DIODE 1N4151 75PIV IR.1UA SI	6082-1001	14433	1N3604
CR	2	DIODE 1N4151 75PIV IR.1UA SI	6082-1001	14433	1N3604
CR	3	DIODE 1N4151 75PIV IR.1UA SI	6082-1001	14433	1N3604
CR	4	DIODE 1N4151 75PIV IR.1UA SI	6082-1001	14433	1N3604
CR	5	DIODE 1N4151 75PIV IR.1UA SI	6082-1001	14433	1N3604
CR	6	DIODE 1N4151 75PIV IR.1UA SI	6082-1001	14433	1N3604
CR	8	DIODE 1N4151 75PIV IR.1UA SI	6082-1001	14433	1N3604
CR	9	DIODE 1N4151 75PIV IR.1UA SI	6082-1001	14433	1N3604
CR	10	DIODE 1N4151 75PIV IR.1UA SI	6082-1001	14433	1N3604
CR	11	DIODE 1N4151 75PIV IR.1UA SI	6082-1001	14433	1N3604
CR	12	DIODE 1N191 90PIV IR 125UA GE	6082-1008	14433	1N191
CR	13	DIODE 1N191 90PIV IR 125UA GE	6082-1008	14433	1N191
CR	14	DIODE 1N4151 75PIV IR.1UA SI	6082-1001	14433	1N3604
CR	15	DIODE 1N4151 75PIV IR.1UA SI	6082-1001	14433	1N3604
CR	16	DIODE 1N995 15PIV IR 10UA GE	6082-1002	03877	1N995
DS	1	LAMP BI-PIN BASE 10V .04A 5000H	5600-1071	71744	CM7-7367
DS	2	LAMP BI-PIN BASE 10V .04A 5000H	5600-1071	71744	CM7-7367
DS	3	LAMP BI-PIN BASE 10V .04A 5000H	5600-1071	71744	CM7-7367
DS	4	LAMP BI-PIN BASE 10V .04A 5000H	5600-1071	71744	CM7-7367
DS	5	LAMP BI-PIN BASE 10V .04A 5000H	5600-1071	71744	CM7-7367
DS	6	LAMP BI-PIN BASE 10V .04A 5000H	5600-1071	71744	CM7-7367
DS	7	LAMP BI-PIN BASE 10V .04A 5000H	5600-1071	71744	CM7-7367
DS	8	LAMP BI-PIN BASE 10V .04A 5000H	5600-1071	71744	CM7-7367
IC	1	ICD DTUL946 14D GATE	5431-9462	01295	SN15846N
IC	2	ICD DTUL930 14D GATE	5431-9302	01295	SN15830N
IC	3	ICD DTUL930 14D GATE	5431-9302	01295	SN15830N
IC	4	ICD DTUL936 14D INVERTER	5431-9362	01295	SN15836N
IC	5	ICD DTUL962 14D GATE	5431-9622	04713	MC862P
IC	6	ICD DTUL930 14D GATE MD	5431-9302	01295	SN15830N
IC	7	ICD DTUL930 14D GATE MD	5431-9302	01295	SN15830N
IC	8	ICD DTUL944 14D POWER GATE	5431-9442	01295	SN15844N
IC	9	ICD DTUL9099 14D D CLK JK FLIFLO	5431-9099	01295	SN158099N
IC	10	ICD DTUL946 14D GATE	5431-9462	01295	SN15846N
IC	11	ICD DTUL936 14D INVERTER	5431-9362	01295	SN15836N
IC	12	ICD DTUL944 14D POWER GATE	5431-9442	01295	SN15844N
IC	13	ICD DTUL9099 14D D CLK JK FLIFLO	5431-9099	01295	SN158099N
IC	14	ICD DTUL962 14D GATE	5431-9622	04713	MC862P
IC	15	ICD DTUL936 14D INVERTER	5431-9362	01295	SN15836N
IC	16	ICD DTUL944 14D POWER GATE	5431-9442	01295	SN15844N
IC	17	ICD DTUL949 14D GATE	5431-9492	01295	SN15849N
IC	18	ICD DTUL948 14D CLK FLIFLO	5431-9482	01295	SN15848N
IC	19	ICD DTUL930 14D GATE	5431-9302	01295	SN15830N
IC	20	ICD DTUL9093 14D D CLK JK FLIFLO	5431-9093	01295	SN158093N
IC	21	ICD DTUL936 14D INVERTER	5431-9362	01295	SN15836N
IC	22	ICD DTUL946 14D GATE	5431-9462	01295	SN15846N
IC	23	ICD DTUL944 14D POWER GATE	5431-9442	01295	SN15844N
IC	24	ICD DTUL944 14D POWER GATE	5431-9442	01295	SN15844N
IC	25	ICD DTUL936 14D INVERTER	5431-9362	01295	SN15836N
IC	26	ICD DTUL946 14D GATE	5431-9462	01295	SN15846N
IC	27	ICD DTUL944 14D POWER GATE	5431-9442	01295	SN15844N
IC	28	ICD DTUL948 14D CLK FLIFLO	5431-9482	01295	SN15848N
IC	29	ICD DTUL948 14D CLK FLIFLO	5431-9482	01295	SN15848N
IC	30	ICD DTUL946 14D GATE	5431-9462	01295	SN15846N
IC	31	ICD DTUL932 14D BUFF GATE	5431-9322	01295	SN15832N
IC	32	ICD DTUL932 14D BUFF GATE	5431-9322	01295	SN15832N
IC	33	ICD DTUL949 14D GATE	5431-9492	01295	SN15849N
IC	34	ICD DTUL932 14D BUFF GATE	5431-9322	01295	SN15832N
IC	35	ICD DTUL932 14D BUFF GATE	5431-9322	01295	SN15832N
IC	36	ICD DTUL946 14D GATE	5431-9462	01295	SN15846N
Q	1	TRANSISTOR 2N3414	8210-1047	03508	2N3414
R	1	RES COMP 10 K 5PCT 1/4W	6099-3105	81349	RCR07G103J
R	2	RES COMP 10 K 5PCT 1/4W	6099-3105	81349	RCR07G103J
R	3	RES COMP 51 K OHM 5PCT 1/4W	6099-3515	81349	RCR07G513J
R	4	RES COMP 51 K OHM 5PCT 1/4W	6099-3515	81349	RCR07G513J
R	5	RES COMP 24 K OHM 5PCT 1/4W	6099-3245	81349	RCR07G243J
R	6	RES COMP 5.6 K 5PCT 1/4W	6099-2565	81349	RCR07G562J
R	7	RES COMP 1.0 K 5PCT 1/4W	6099-2105	81349	RCR07G102J
R	8	RES COMP 5.6 K 5PCT 1/4W	6099-2565	81349	RCR07G562J
R	9	RES COMP 5.6 K 5PCT 1/4W	6099-2565	81349	RCR07G562J

File Courtesy of GRWiki.org

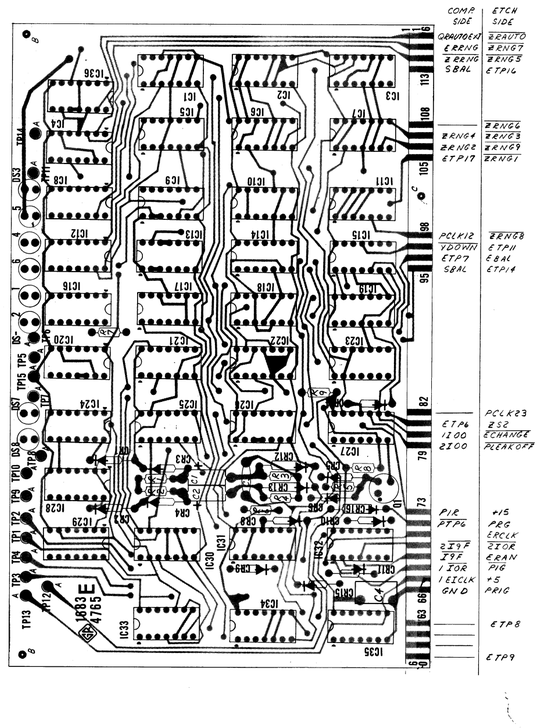

NOTE: *Orientation:* Viewed from parts side. *Part number:* Refer to caption. *Symbolism:* Outlined area = part; gray ckt pattern (if any) = parts side, black = other side. *Pins:* Separate dot (●) = collector, half dot (◖) or 1 = I-C pin 1.

Range (P/N 1683-4765) etched-circuit board layout.

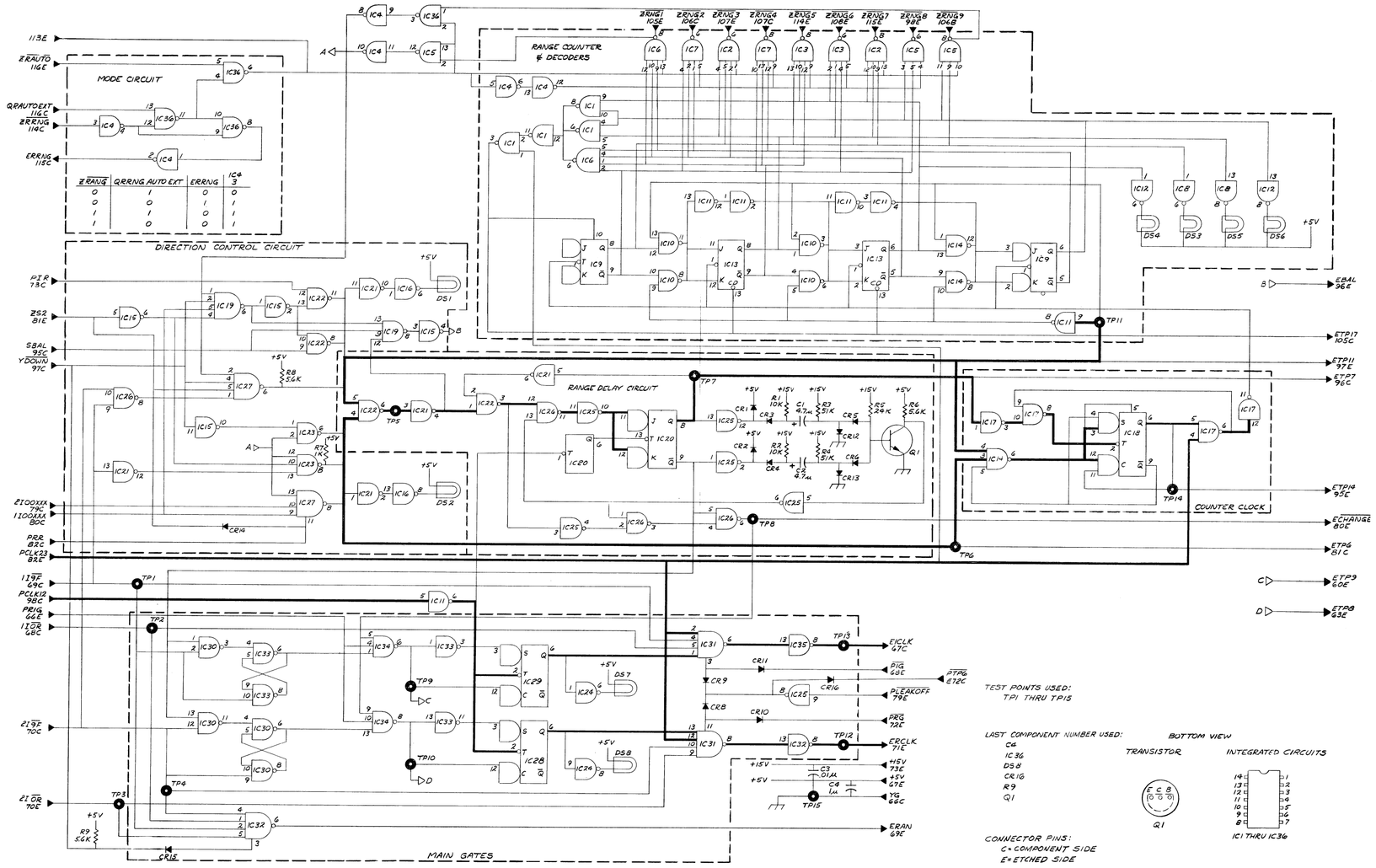

Figure 6-8. Range board schematic, E.

File Courtesy of GRWiki.org

ELECTRICAL PARTS LIST

F-DISPLAY MODULE P/N 1683-4736

REFDES	DESCRIPTION	PART NO.	FMC	MFGR PART NUMBER
DS 17	LAMP BI-PIN BASE 6.3V .075A 500H	5600-1070	71744	CM7-7377
DS 18	LAMP BI-PIN BASE 6.3V .075A 500H	5600-1070	71744	CM7-7377
DS 19	LAMP BI-PIN BASE 6.3V .075A 500H	5600-1070	71744	CM7-7377
DS 20	LAMP BI-PIN BASE 6.3V .075A 500H	5600-1070	71744	CM7-7377
DS 21	LAMP BI-PIN BASE 6.3V .075A 500H	5600-1070	71744	CM7-7377
DS 22	LAMP BI-PIN BASE 6.3V .075A 500H	5600-1070	71744	CM7-7377
DS 23	LAMP BI-PIN BASE 6.3V .075A 500H	5600-1070	71744	CM7-7377

G-DISPLAY MODULE P/N 1683-4733

REFDES	DESCRIPTION	PART NO.	FMC	MFGR PART NUMBER
DS 5	LAMP BI-PIN BASE 6.3V .075A 500H	5600-1070	71744	CM7-7377
DS 6	LAMP BI-PIN BASE 6.3V .075A 500H	5600-1070	71744	CM7-7377
DS 7	LAMP BI-PIN BASE 6.3V .075A 500H	5600-1070	71744	CM7-7377
DS 8	LAMP BI-PIN BASE 6.3V .075A 500H	5600-1070	71744	CM7-7377
DS 9	LAMP BI-PIN BASE 6.3V .075A 500H	5600-1070	71744	CM7-7377
DS 10	LAMP BI-PIN BASE 6.3V .075A 500H	5600-1070	71744	CM7-7377
DS 11	LAMP BI-PIN BASE 6.3V .075A 500H	5600-1070	71744	CM7-7377
DS 12	LAMP BI-PIN BASE 6.3V .075A 500H	5600-1070	71744	CM7-7377
DS 13	LAMP BI-PIN BASE 6.3V .075A 500H	5600-1070	71744	CM7-7377
DS 14	LAMP BI-PIN BASE 6.3V .075A 500H	5600-1070	71744	CM7-7377
DS 15	LAMP BI-PIN BASE 6.3V .075A 500H	5600-1070	71744	CM7-7377
DS 16	LAMP BI-PIN BASE 6.3V .075A 500H	5600-1070	71744	CM7-7377

U-DISPLAY MODULE P/N 1683-4739

REFDES	DESCRIPTION	PART NO.	FMC	MFGR PART NUMBER
DS 1	LAMP BI-PIN BASE 6.3V .075A 500H	5600-1070	71744	CM7-7377
DS 2	LAMP BI-PIN BASE 6.3V .075A 500H	5600-1070	71744	CM7-7377
DS 3	LAMP BI-PIN BASE 6.3V .075A 500H	5600-1070	71744	CM7-7377
DS 4	LAMP BI-PIN BASE 6.3V .075A 500H	5600-1070	71744	CM7-7377

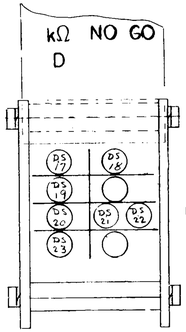

F - Display Module Assembly.

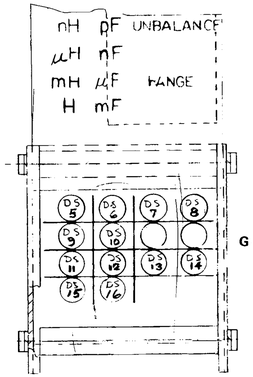

G - Display Module Assembly.

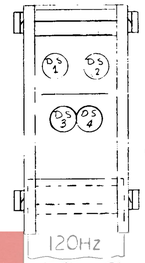

U - Display Module Assembly.

File Courtesy of GRWiki.org

ELECTRICAL PARTS LIST

DISPLAY PC BOARD H P/N 1683-4760

REFDES	DESCRIPTION	PART NO.	FMC	MFGR PART NUMBER
CR 1	DIODE 1N4151 75PIV IR.1UA SI	6082-1001	14433	1N3604
IC 1	ICD DTUL936 14D INVERTER	5431-9362	01295	SN15836N
IC 2	ICD 9960 16D DECODE NIXIE DR	5431-9602	07263	U6B996079X
IC 3	ICD 9960 16D DECODE NIXIE DR	5431-9602	07263	U6B996079X
IC 4	ICD 9960 16D DECODE NIXIE DR	5431-9602	07263	U6B996079X
IC 5	ICD 9960 16D DECODE NIXIE DR	5431-9602	07263	U6B996079X
IC 6	ICD DTUL936 14D INVERTER	5431-9362	01295	SN15836N
IC 7	ICD 9960 16D DECODE NIXIE DR	5431-9602	07263	U6B996079X
IC 8	ICD 9960 16D DECODE NIXIE DR	5431-9602	07263	U6B996079X
IC 9	ICD 9960 16D DECODE NIXIE DR	5431-9602	07263	U6B996079X
IC 10	ICD 9960 16D DECODE NIXIE DR	5431-9602	07263	U6B996079X
IC 11	ICD DTUL936 14D INVERTER	5431-9362	01295	SN15836N
IC 12	ICD DTUL936 14D INVERTER	5431-9362	01295	SN15836N
IC 13	ICD DTUL936 14D INVERTER	5431-9362	01295	SN15836N
IC 14	ICD DTUL936 14D INVERTER	5431-9362	01295	SN15836N
J 9	SOCKET TUBE 12 CONT	7540-3466	83781	RTS-14
J 10	SOCKET TUBE 12 CONT	7540-3466	83781	RTS-14
J 11	SOCKET TUBE 12 CONT	7540-3466	83781	RTS-14
J 12	SOCKET TUBE 12 CONT	7540-3466	83781	RTS-14
J 13	SOCKET TUBE 12 CONT	7540-3466	83781	RTS-14
J 14	SOCKET TUBE 12 CONT	7540-3466	83781	RTS-14
J 15	SOCKET TUBE 12 CONT	7540-3466	83781	RTS-14
J 16	SOCKET TUBE 12 CONT	7540-3466	83781	RTS-14
J 17	SOCKET TUBE 12 CONT	7540-3466	83781	RTS-14
J 18	SOCKET TUBE 12 CONT	7540-3466	83781	RTS-14
Q 1	TRANSISTOR 2N4410	8210-1176	04713	2N4410
Q 2	TRANSISTOR 2N4410	8210-1176	04713	2N4410
Q 3	TRANSISTOR 2N4410	8210-1176	04713	2N4410
Q 4	TRANSISTOR 2N4410	8210-1176	04713	2N4410
Q 5	TRANSISTOR 2N4410	8210-1176	04713	2N4410
Q 6	TRANSISTOR 2N4410	8210-1176	04713	2N4410
Q 7	TRANSISTOR 2N4410	8210-1176	04713	2N4410
Q 8	TRANSISTOR 2N4410	8210-1176	04713	2N4410
Q 9	TRANSISTOR 2N4410	8210-1176	04713	2N4410
Q 10	TRANSISTOR 2N4410	8210-1176	04713	2N4410
Q 11	TRANSISTOR 2N4410	8210-1176	04713	2N4410
R 1	RES COMP 30 K 5PCT 2W	6120-3305	81349	RCR42G303J
R 2	RES COMP 30 K 5PCT 2W	6120-3305	81349	RCR42G303J
R 3	RES COMP 30 K 5PCT 2W	6120-3305	81349	RCR42G303J
R 4	RES COMP 30 K 5PCT 2W	6120-3305	81349	RCR42G303J
R 5	RES COMP 30 K 5PCT 2W	6120-3305	81349	RCR42G303J
R 6	RES COMP 30 K 5PCT 2W	6120-3305	81349	RCR42G303J
R 7	RES COMP 30 K 5PCT 2W	6120-3305	81349	RCR42G303J
R 8	RES COMP 30 K 5PCT 2W	6120-3305	81349	RCR42G303J
R 9	RES COMP 30 K 5PCT 2W	6120-3305	81349	RCR42G303J
R 10	RES COMP 30 K 5PCT 2W	6120-3305	81349	RCR42G303J
V 1	INDICATOR DIGITAL	5437-0845	83781	NL-845
V 2	INDICATOR DIGITAL	5437-0845	83781	NL-845
V 3	INDICATOR DIGITAL	5437-0845	83781	NL-845
V 4	INDICATOR DIGITAL	5437-0845	83781	NL-845
V 5	INDICATOR DIGITAL	5437-0845	83781	NL-845
V 6	INDICATOR DIGITAL	5437-0845	83781	NL-845
V 7	INDICATOR DIGITAL	5437-0845	83781	NL-845
V 8	INDICATOR DIGITAL	5437-0845	83781	NL-845
V 9	INDICATOR DIGITAL	5437-0845	83781	NL-845
V 10	INDICATOR DIGITAL	5437-0845	83781	NL-845

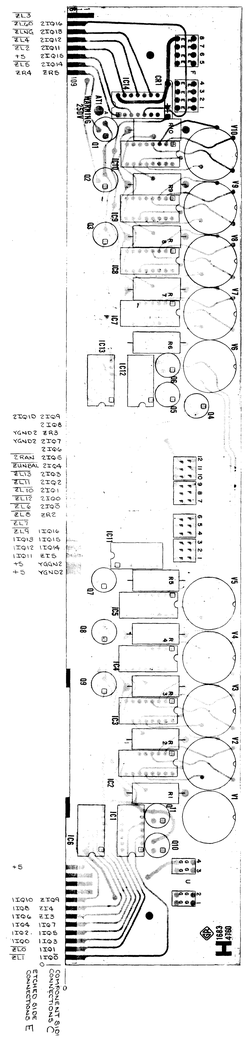

NOTE: *Orientation:* Viewed from parts side. *Part number:* Refer to caption. *Symbolism:* Outlined area = part; gray ckt pattern (if any) = parts side, black = other side. *Pins:*

Display (P/N 1683-4760) etched-circuit board layout.

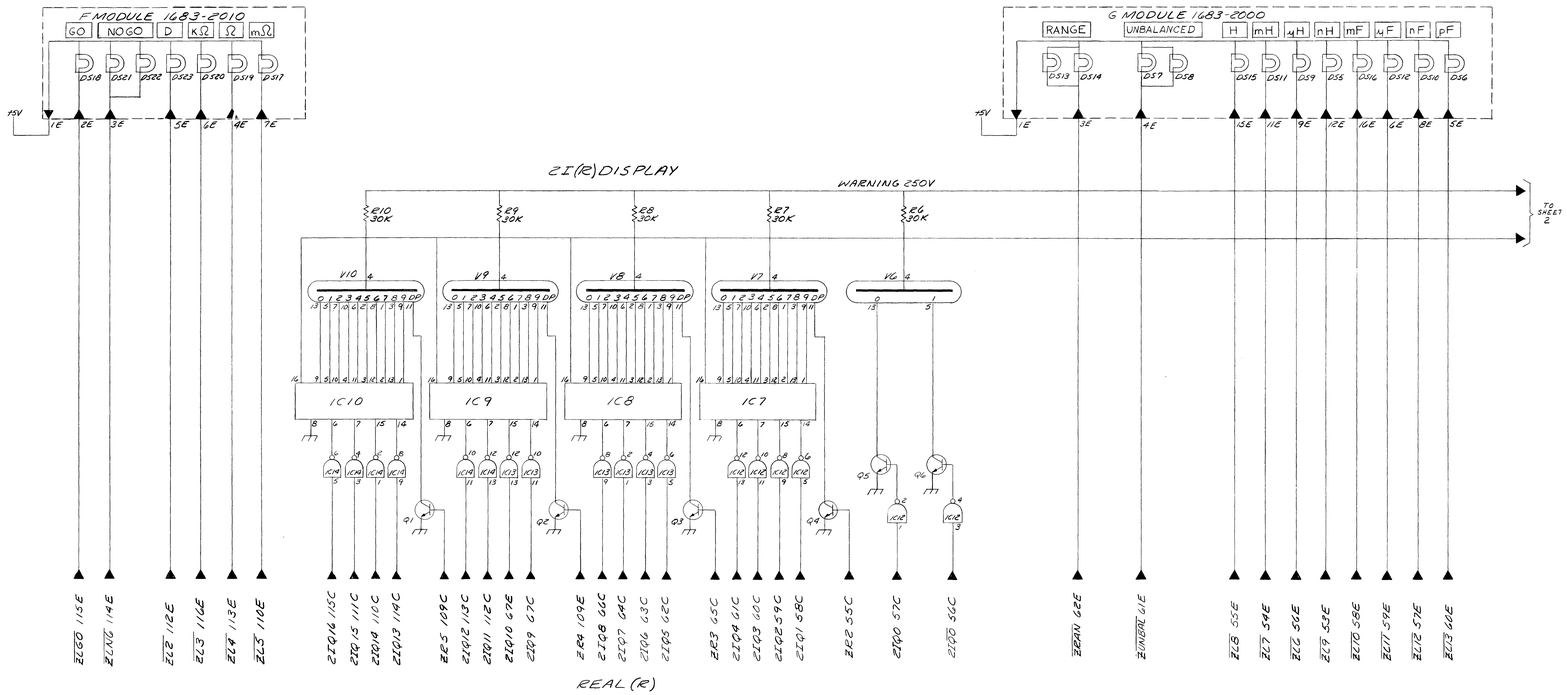

FOR LAST COMPONENT NOS USED, TRANSISTOR AND INTEGRATED BASING SEE 1683-4760-20-110

CONNECTOR PINS: E = ETCHED SIDE
C = COMPONENT SIDE

RESISTANCE IS IN OHMS: $x \cdot x10^3$ $M=x10^6$ CAPACITANCE IS IN FARADS, $p=10^{-6}$ $\mu=10^{-12}$ VOLTAGES EXPLAINED IN INSTRUCTION BOOK SERVICE NOTES PANEL CONTROL ▒▒▒▒ •REAR CONTROL ⊘•SCREWDRIVER CONTROL WT•WIRE TIE TP•TEST POINT COMPLETE REFERENCE DESIGNATION INCLUDES SUBASSEMBLY LETTER, C•M, B•M, ETC.	4 0 4 F SWITCH NUMBERING FRONT, REAR CONTACTS, FIRST CONTACT CW FROM STRUT SCREW ABOVE KEY IS 20. SECTION, SECTION NEAREST PANEL IS 1. ROTORS SHOWN CCW	CONNECTIONS OUTPUT LEAVES SUBASSEMBLY INPUT FROM DIFFERENT SUBASSEMBLY OUTPUT REMAINS ON SUBASSEMBLY INPUT FROM SAME SUBASSEMBLY

Figure 6-9. Display board schematic (sheet 1 of 2), H.

File Courtesy of GRWiki.org

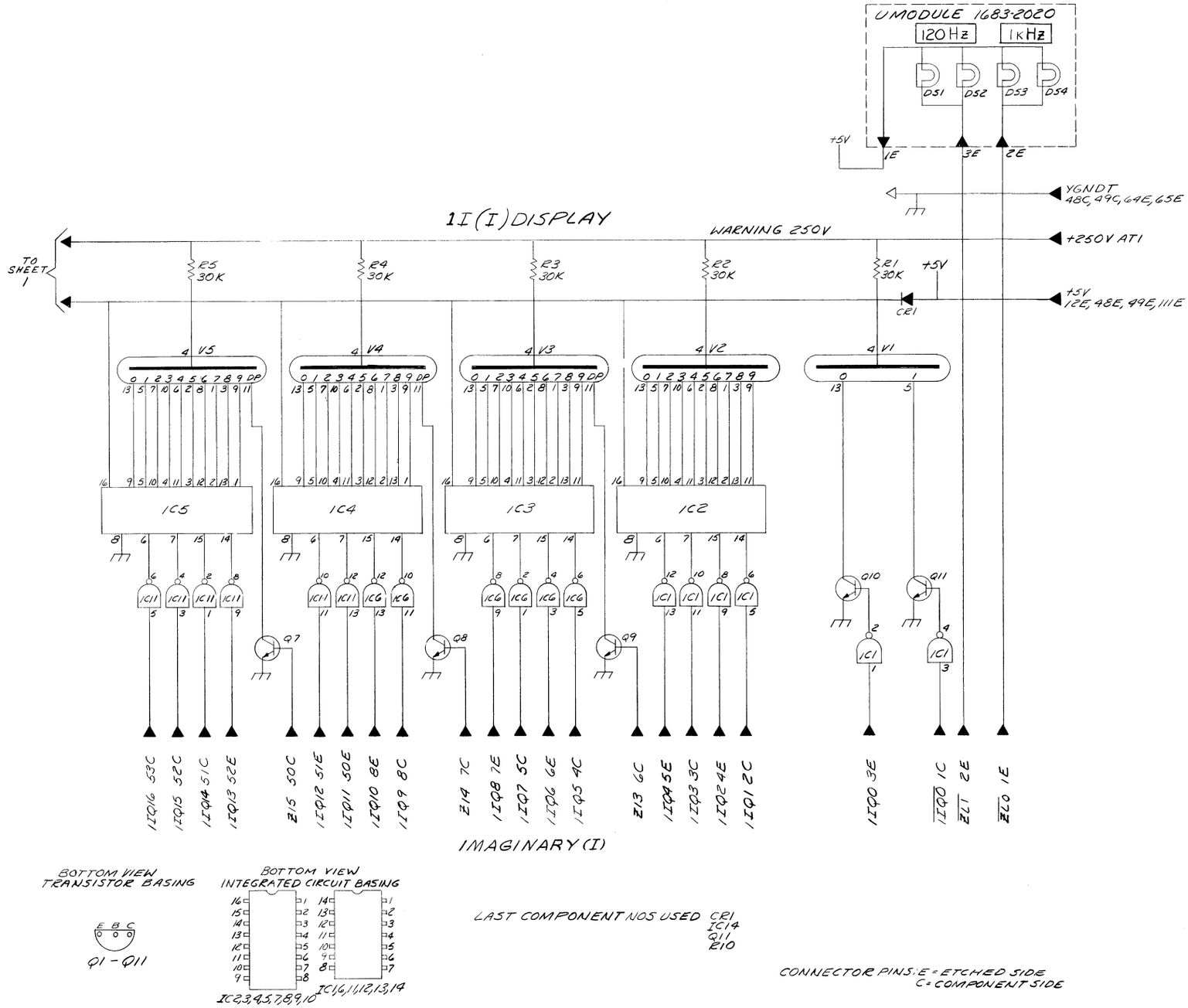

Figure 6-10. Display board schematic (sheet 2 of 2), .

File Courtesy of GRWiki.org

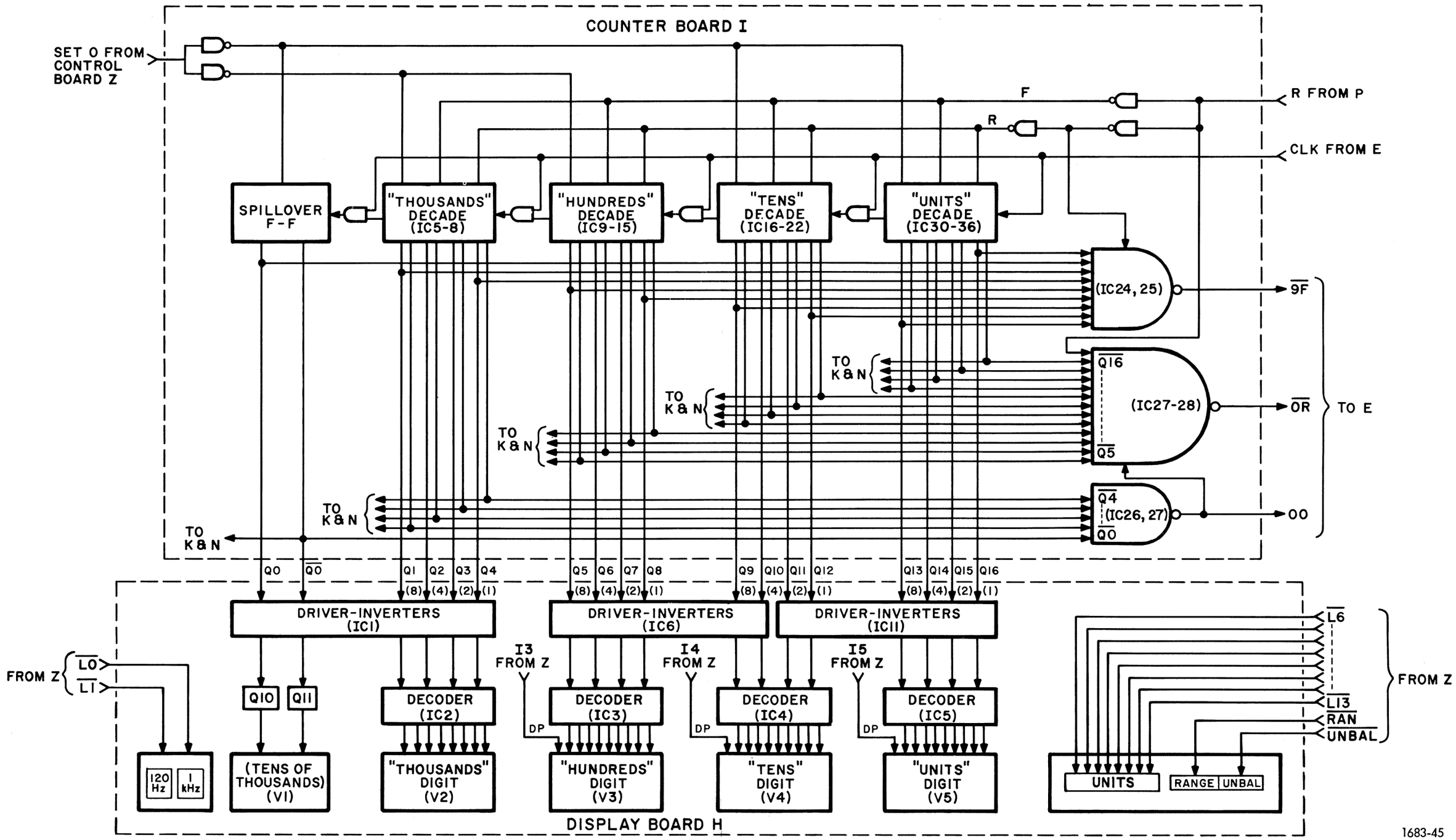

Figure 6-11. Counter and display circuit block diagram showing circuit interface.

File Courtesy of GRWiki.org

ELECTRICAL PARTS LIST

COUNTER PC BOARD I P/N 1683-4755

REFDES		DESCRIPTION	PART NO.	FMC	MFGR PART NUMBER
C	1	CAP CER MONO 0.1UF 20PCT 50VGP	4400-2050	72982	8131-M050-651-104M
C	2	CAP CER MONO 0.1UF 20PCT 50VGP	4400-2050	72982	8131-M050-651-104M
CR	1	DIODE 1N4151 75PIV IR.1UA SI	6082-1001	14433	1N3604
CR	2	DIODE 1N4151 75PIV IR.1UA SI	6082-1001	14433	1N3604
CR	3	DIODE 1N4151 75PIV IR.1UA SI	6082-1001	14433	1N3604
CR	4	DIODE 1N995 15PIV IR 10UA GE	6082-1002	03877	1N995
CR	5	DIODE 1N995 15PIV IR 10UA GE	6082-1002	03877	1N995
CR	6	DIODE 1N995 15PIV IR 10UA GE	6082-1002	03877	1N995
CR	7	DIODE 1N995 15PIV IR 10UA GE	6082-1002	03877	1N995
IC	1	ICD DTUL945 14D CLK FLIFLO	5431-9452	01295	SN15845N
IC	2	ICD DTUL949 14D GATE	5431-9492	01295	SN15849N
IC	3	ICD DTUL932 14D BUFF GATE	5431-9322	01295	SN15832N
IC	4	ICD DTUL9099 14D D CLK JK FLIFLO	5431-9099	01295	SN158099N
IC	5	ICD DTUL946 14D GATE	5431-9462	01295	SN15846N
IC	6	ICD DTUL946 14D GATE	5431-9462	01295	SN15846N
IC	7	ICD DTUL946 14D GATE	5431-9462	01295	SN15846N
IC	8	ICD DTUL9099 14D D CLK JK FLIFLO	5431-9099	01295	SN158099N
IC	9	ICD DTUL949 14D GATE	5431-9492	01295	SN15849N
IC	10	ICD DTUL932 14D BUFF GATE	5431-9322	01295	SN15832N
IC	11	ICD DTUL9099 14D D CLK JK FLIFLO	5431-9099	01295	SN158099N
IC	12	ICD DTUL946 14D GATE	5431-9462	01295	SN15846N
IC	13	ICD DTUL946 14D GATE	5431-9462	01295	SN15846N
IC	14	ICD DTUL946 14D GATE	5431-9462	01295	SN15846N
IC	15	ICD DTUL9099 14D D CLK JK FLIFLO	5431-9099	01295	SN158099N
IC	16	ICD DTUL949 14D GATE	5431-9492	01295	SN15849N
IC	17	ICD DTUL932 14D BUFF GATE	5431-9322	01295	SN15832N
IC	18	ICD DTUL9099 14D D CLK JK FLIFLO	5431-9099	01295	SN158099N
IC	19	ICD DTUL946 14D GATE	5431-9462	01295	SN15846N
IC	20	ICD DTUL946 14D GATE	5431-9462	01295	SN15846N
IC	21	ICD DTUL946 14D GATE	5431-9462	01295	SN15846N
IC	22	ICD DTUL9099 14D D CLK JK FLIFLO	5431-9099	01295	SN158099N
IC	23	ICD DTUL932 14D BUFF GATE	5431-9322	01295	SN15832N
IC	24	ICD DTUL932 14D BUFF GATE	5431-9322	01295	SN15832N
IC	25	ICD DTUL933 14D EXPANDER	5431-9332	01295	SN15833N
IC	26	ICD DTUL949 14D GATE	5431-9492	01295	SN15849N
IC	27	ICD DTUL932 14D BUFF GATE	5431-9322	01295	SN15832N
IC	28	ICD DTUL933 14D EXPANDER	5431-9332	01295	SN15833N
IC	29	ICD DTUL932 14D BUFF GATE	5431-9322	01295	SN15832N
IC	30	ICD DTUL949 14D GATE	5431-9492	01295	SN15849N
IC	31	ICD DTUL932 14D BUFF GATE	5431-9322	01295	SN15832N
IC	32	ICD DTUL9097 14D D CLK JK FLIFLO	5431-9097	01295	SN158097N
IC	33	ICD DTUL946 14D GATE	5431-9462	01295	SN15846N
IC	34	ICD DTUL946 14D GATE	5431-9462	01295	SN15846N
IC	35	ICD DTUL946 14D GATE	5431-9462	01295	SN15846N
IC	36	ICD DTUL9097 14D D CLK JK FLIFLO	5431-9097	01295	SN158097N

File Courtesy of GRWiki.org

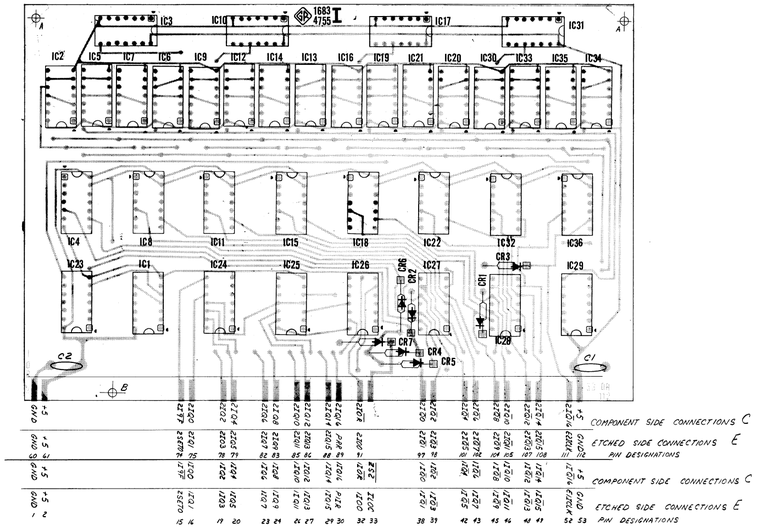

NOTE: *Orientation:* Viewed from parts side. *Part number:* Refer to caption. *Symbolism:* Outlined area = part; gray ckt pattern (if any) = parts side, black = other side. *Pins:* Separate dot (●) = collector, half dot (◖) or 1 = I-C pin 1.

Counter (P/N 1683-4755) etched-circuit board layout.

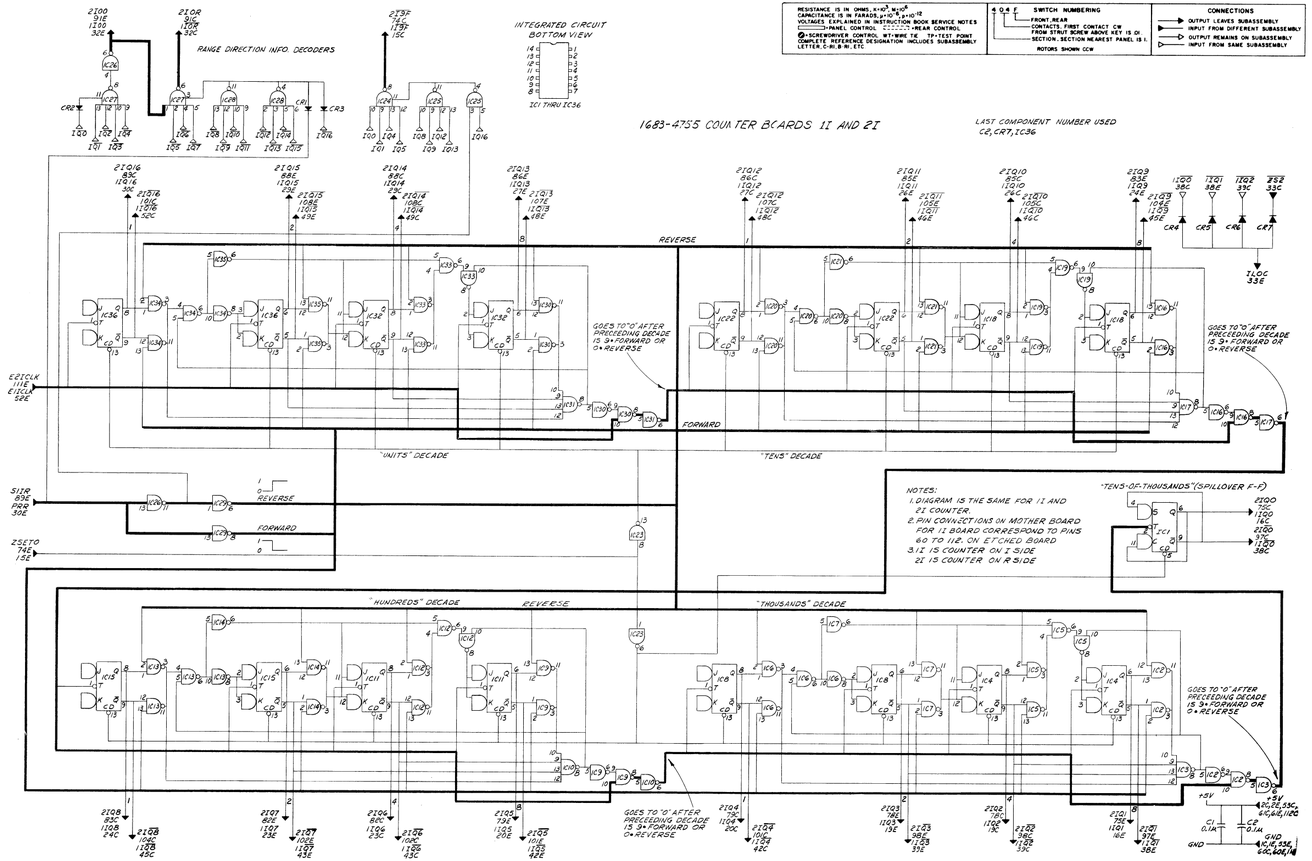

Figure 6-12. 1I and 2I Counter boards logic diagram, 1I and 2I.

File Courtesy of GRWiki.org

ELECTRICAL PARTS LIST

POWER AMPLIFIER PC BOARD J P/N 1683-4795

REFDES		DESCRIPTION	PART NO.	FMC	MFGR PART NUMBER
C	1	CAP TANT 68 UF 20PCT 15V	4450-5615	56289	150D686X0015R2
C	2	CAP CER DISC 1000PF 80/20PCT 500	4404-2109	72982	0831082Z5U00102Z
C	3	CAP CER DISC 100PF 80/20PCT 500V	4404-1109	72982	0831082Z5U00101Z
C	4	CAP TANT 22 UF 20PCT 15V	4450-5300	56289	150D226X0015B2
C	5	CAP ALUM 1225 UF 15V	4450-6115	56289	30D 1225UF 15V
C	6	CAP ALUM 1225 UF 15V	4450-6115	56289	30D 1225UF 15V
C	7	CAP CER SQ .10UF 80/20PCT 100V	4403-4100	72982	8131M100651104Z
C	8	CAP CER DISC 100PF 80/20PCT 500V	4404-1109	72982	0831082Z5U00101Z
C	9	CAP CER DISC 100PF 80/20PCT 500V	4404-1109	72982	0831082Z5U00101Z
C	10	CAP CER DISK 0.22UF 80/20PCT 12V	4432-4229	72982	5615-000-Y5F-224Z
C	11	CAP CER DISC 1000PF 80/20PCT 500	4404-2109	72982	0831082Z5U00102Z
C	12	CAP CER SQ .10UF 80/20PCT 100V	4403-4100	72982	8131M100651104Z
C	13	CAP CER DISC 150PF 10PCT 500V	4404-1158	72982	0831082Z5D00151K
CR	1	DIODE 1N4151 75PIV IR.1UA SI	6082-1001	14433	1N3604
CR	2	DIODE 1N4151 75PIV IR.1UA SI	6082-1001	14433	1N3604
CR	3	DIODE 1N4151 75PIV IR.1UA SI	6082-1001	14433	1N3604
CR	4	DIODE 1N695 20PIV IR 20UA GE	6082-1014	14433	1N695
CR	5	DIODE RECTIFIER 1N4003	6081-1001	14433	1N4003
CR	6	DIODE RECTIFIER 1N4003	6081-1001	14433	1N4003
CR	7	DIODE 1N4151 75PIV IR.1UA SI	6082-1001	14433	1N3604
CR	8	ZENER 1N758A 10V 5PCT .4W	6083-1012	14433	1N758A
CR	9	DIODE 1N4151 75PIV IR.1UA SI	6082-1001	14433	1N3604
CR	10	DIODE 1N4151 75PIV IR.1UA SI	6082-1001	14433	1N3604
IC	1	ICD DTUL936 14D INVERTER	5431-9362	01295	SN15836N
Q	1	TRANSISTOR TO-100	8210-1130	56289	TO-100
Q	2	TRANSISTOR 2N4125	8210-1125	04713	2N4125
Q	3	TRANSISTOR 2N2218	8210-1028	04713	2N2218
Q	4	TRANSISTOR 2N2904	8210-1074	04713	2N2904
Q	5	TRANSISTOR 2N5190	8210-1196	04713	2N5190
Q	6	TRANSISTOR 2N5193	8210-1197	04713	2N5193
Q	7	TRANSISTOR 2N5459	8210-1177	04713	2N5459
Q	8	TRANSISTOR 2N3414	8210-1047	03508	2N3414
Q	9	TRANSISTOR 2N3414	8210-1047	03508	2N3414
Q	10	TRANSISTOR 2N3414	8210-1047	03508	2N3414
Q	11	TRANSISTOR 2N3414	8210-1047	03508	2N3414
R	1	RES COMP 10 K 5PCT 1/4W	6099-3105	81349	RCR07G103J
R	2	RES COMP 10 K 5PCT 1/4W	6099-3105	81349	RCR07G103J
R	3	RES COMP 6.2 K OHM 5PCT 1/4W	6099-2625	81349	RCR07G622J
R	4	RES COMP 2.0 K OHM 5PCT 1/4W	6099-2205	81349	RCR07G202J
R	5	RES COMP 5.1 M OHM 5PCT 1/4W	6099-5515	81349	RCR07G515J
R	7	POT WW TRM 20K OHM 10 PCT 20T	6051-3209	80294	3005P-1-203
R	9	RES COMP 56 K 5PCT 1/4W	6099-3565	81349	RCR07G563J
R	10	RES COMP 3.9 K 5PCT 1/4W	6099-2395	81349	RCR07G392J
R	11	RES COMP 1.6 K OHM 5PCT 1/4W	6099-2165	81349	RCR07G162J
R	12	RES COMP 1.6 K OHM 5PCT 1/4W	6099-2165	81349	RCR07G162J
R	13	RES COMP 22 K 5PCT 1/4W	6099-3225	81349	RCR07G223J
R	14	RES COMP 150 OHM 5PCT 1/2W	6100-1155	81349	RCR20G151J
R	15	RES COMP 150 OHM 5PCT 1/2W	6100-1155	81349	RCR20G151J
R	16	RES WW AX LEAD 1.8 OHM 5 PCT 5W	6660-9185	75042	AS-5 1.8 OHM 5PCT
R	17	RES WW AX LEAD 1.8 OHM 5 PCT 5W	6660-9185	75042	AS-5 1.8 OHM 5PCT
R	18	RES WW AX LEAD 1.8 OHM 5 PCT 5W	6660-9185	75042	AS-5 1.8 OHM 5PCT
R	19	RES WW AX LEAD 1.8 OHM 5 PCT 5W	6660-9185	75042	AS-5 1.8 OHM 5PCT
R	20	RES COMP 20 K OHM 5PCT 1/4W	6099-3205	81349	RCR07G203J
R	21	RES COMP 27 K 5PCT 1/4W	6099-3275	81349	RCR07G273J
R	22	RES COMP 82 K 5PCT 1/4W	6099-3825	81349	RCR07G823J
R	23	RES COMP 5.1 K OHM 5PCT 1/4W	6099-2515	81349	RCR07G512J
R	24	RES COMP 22 OHM 5PCT 1/2W	6100-0225	81349	RCR20G220J
R	25	RES WW AX LEAD 1.8 OHM 5 PCT 5W	6660-9185	75042	AS-5 1.8 OHM 5PCT
R	26	RES COMP 22 OHM 5PCT 1/2W	6100-0225	81349	RCR20G220J
R	27	POT CERM TRM 10K OHM 10 PCT 15T	6049-0189	80294	3006P-1-103
R	28	RES COMP 200 OHM 5PCT 1/4W	6099-1205	81349	RCR07G201J
R	29	RES COMP 100 OHM 5PCT 1/4W	6099-1105	81349	RCR07G101J
R	30	RES COMP 100 K 5PCT 1/4W	6099-4105	81349	RCR07G104J
R	31	RES COMP 5.1 K OHM 5PCT 1/4W	6099-2515	81349	RCR07G512J
R	32	RES COMP 1.0 K 5PCT 1/4W	6099-2105	81349	RCR07G102J

File Courtesy of GRWiki.org

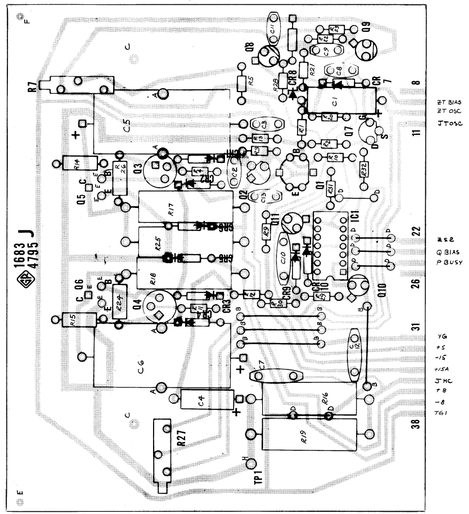

NOTE: *Orientation:* Viewed from parts side. *Part number:* Refer to caption. *Symbolism:* Outlined area = part; black ckt pattern (if any) = parts side, gray = other side.

Power amplifier (P/N 1683-4795) etched-circuit board layout.

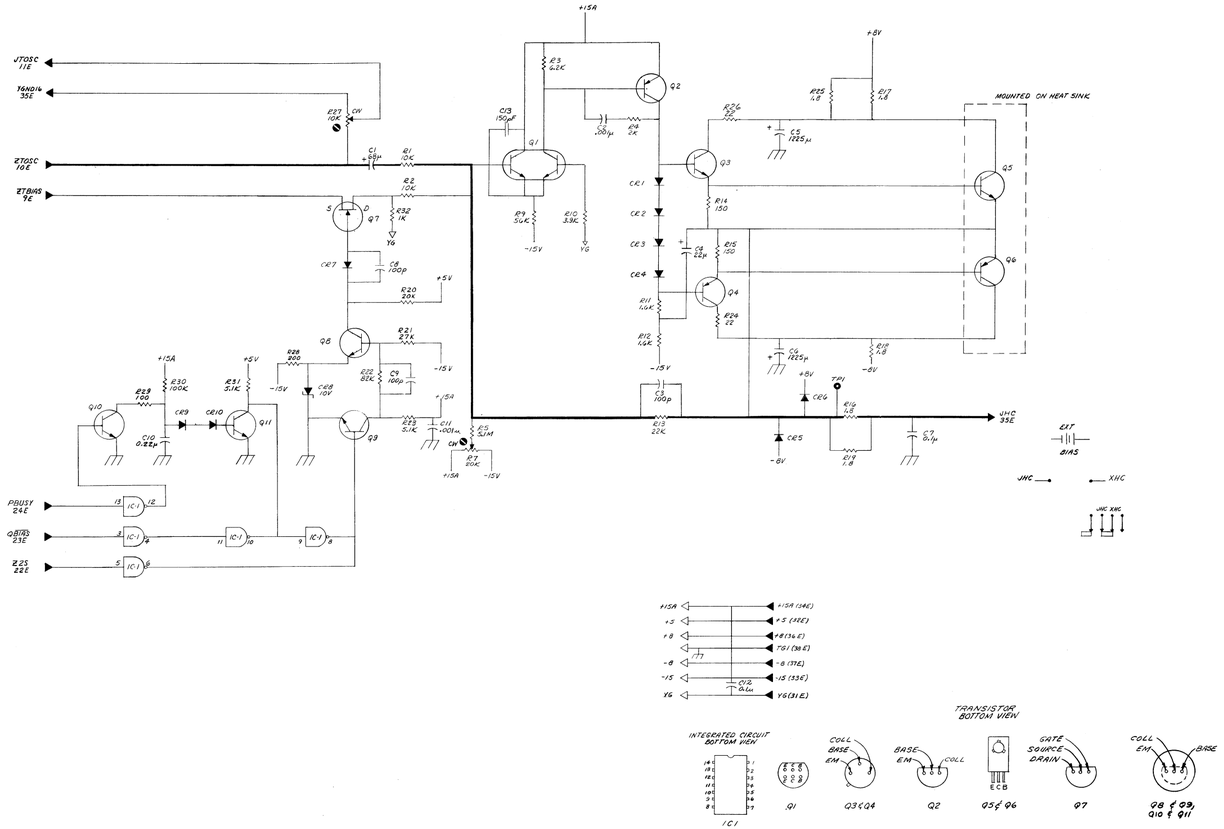

RESISTANCE IS IN OHMS, K=10^3, M=10^6 CAPACITANCE IS IN FARADS, $\mu=10^{-6}$, $p=10^{-12}$ VOLTAGES EXPLAINED IN INSTRUCTION BOOK SERVICE NOTES PANEL CONTROL · · · · · REAR CONTROL SCREWDRIVER CONTROL, WIT-WIRE TIE TP-TEST POINT COMPLETE REFERENCE DESIGNATION INCLUDES SUBASSEMBLY LETTER, C-R1, B-R1, ETC.	4 Q 4 F SWITCH NUMBERING FRONT, REAR CONTACTS, FIRST CONTACT CW FROM STRUT SCREW ABOVE KEY IS 01 SECTION, SECTION NEAREST PANEL IS 1. ROTORS SHOWN CCW	CONNECTIONS OUTPUT LEAVES SUBASSEMBLY INPUT FROM DIFFERENT SUBASSEMBLY OUTPUT REMAINS ON SUBASSEMBLY INPUT FROM SAME SUBASSEMBLY

Figure 6-13. Power amplifier board schematic, J.

File Courtesy of GRWiki.org

ELECTRICAL PARTS LIST

DIVIDER PC BOARD K P/N 1683-4721

REFDES		DESCRIPTION	PART NO.	FMC	MFGR PART NUMBER
C	3	CAP CER TUB .68 PF 10PCT 500V	4400-0068	95121	QC 0.68PF 10PCT 500
C	4	CAP CER DISC .02UF 80/20PCT 100V	4402-3200	56289	55C21 .02UF
C	5	CAP TANT 15 UF 20PCT 20V	4450-5200	56289	150D156X002D2
C	6	CAP CER DISC 20PF 10PCT 500V	4404-0208	72982	0831082Z5F00200K
C	7	CAP TANT 68 UF 20PCT 15V	4450-5615	56289	150D686X0015R2
C	9	CAP CER DISC .02UF 80/20PCT 100V	4402-3200	56289	55C21 .02UF
C	10	CAP TANT 68 UF 20PCT 15V	4450-5615	56289	150D686X0015R2
C	12	CAP CER DISC 1000PF 80/20PCT 500	4404-2109	72982	0831082Z5U00102Z
C	13	CAP CER TUB 1.8PF 5PCT 500V	4400-0180	95121	QC 1.8PF 5PCT 500V
C	16	CAP CER TUB 1.8PF 5PCT 500V	4400-0180	95121	QC 1.8PF 5PCT 500V
C	17	CAP CER TUB 1.2 PF 10PCT 500V	4400-0129	95121	QC 1.2PF 10PCT 500V
C	22	CAP CER SQ .10UF 80/20PCT 100V	4403-4100	72982	8131M100651104Z
C	23	CAP TANT 15 UF 20PCT 20V	4450-5200	56289	150D156X002D2
C	24	CAP CER DISC 39PF 10PCT 500V	4404-0398	72982	0831082Z5D00390K
CR	1	DIODE 1N4151 75PIV IR.1UA SI	6082-1001	14433	1N3604
CR	2	DIODE 1N4151 75PIV IR.1UA SI	6082-1001	14433	1N3604
CR	3	DIODE 1N4151 75PIV IR.1UA SI	6082-1001	14433	1N3604
CR	4	DIODE 1N695 20PIV IR 20UA GE	6082-1014	14433	1N695
CR	5	DIODE 1N695 20PIV IR 20UA GE	6082-1014	14433	1N695
CR	6	DIODE 1N4151 75PIV IR.1UA SI	6082-1001	14433	1N3604
CR	7	DIODE 1N695 20PIV IR 20UA GE	6082-1014	14433	1N695
CR	8	DIODE 1N695 20PIV IR 20UA GE	6082-1014	14433	1N695
CR	9	DIODE 1N4151 75PIV IR.1UA SI	6082-1001	14433	1N3604
CR	10	DIODE 1N4151 75PIV IR.1UA SI	6082-1001	14433	1N3604
CR	11	DIODE 1N4151 75PIV IR.1UA SI	6082-1001	14433	1N3604
CR	12	DIODE 1N695 20PIV IR 20UA GE	6082-1014	14433	1N695
CR	13	DIODE 1N695 20PIV IR 20UA GE	6082-1014	14433	1N695
CR	14	DIODE 1N4151 75PIV IR.1UA SI	6082-1001	14433	1N3604
CR	15	DIODE 1N695 20PIV IR 20UA GE	6082-1014	14433	1N695
CR	16	DIODE 1N695 20PIV IR 20UA GE	6082-1014	14433	1N695
CR	17	DIODE 1N4151 75PIV IR.1UA SI	6082-1001	14433	1N3604
CR	18	DIODE 1N4151 75PIV IR.1UA SI	6082-1001	14433	1N3604
CR	19	DIODE 1N4151 75PIV IR.1UA SI	6082-1001	14433	1N3604
CR	20	DIODE 1N695 20PIV IR 20UA GE	6082-1014	14433	1N695
CR	21	DIODE 1N695 20PIV IR 20UA GE	6082-1014	14433	1N695
CR	22	DIODE 1N4151 75PIV IR.1UA SI	6082-1001	14433	1N3604
CR	23	DIODE 1N695 20PIV IR 20UA GE	6082-1014	14433	1N695
CR	24	DIODE 1N695 20PIV IR 20UA GE	6082-1014	14433	1N695
CR	25	DIODE 1N4151 75PIV IR.1UA SI	6082-1001	14433	1N3604
CR	26	DIODE 1N4151 75PIV IR.1UA SI	6082-1001	14433	1N3604
CR	27	DIODE 1N4151 75PIV IR.1UA SI	6082-1001	14433	1N3604
CR	28	DIODE 1N695 20PIV IR 20UA GE	6082-1014	14433	1N695
CR	29	DIODE 1N695 20PIV IR 20UA GE	6082-1014	14433	1N695
CR	30	DIODE 1N4151 75PIV IR.1UA SI	6082-1001	14433	1N3604
CR	31	DIODE 1N695 20PIV IR 20UA GE	6082-1014	14433	1N695
CR	32	DIODE 1N695 20PIV IR 20UA GE	6082-1014	14433	1N695
CR	33	DIODE 1N4151 75PIV IR.1UA SI	6082-1001	14433	1N3604
CR	36	DIODE 1N4151 75PIV IR.1UA SI	6082-1001	14433	1N3604
CR	42	DIODE 1N4151 75PIV IR.1UA SI	6082-1001	14433	1N3604
IC	1	ICD DTUL936 14D INVERTER	5431-9362	01295	SN15836N
IC	2	IC LINEAR LM301A	5432-1004	12040	LM301AH
KL	27	RELAY COIL 15V 125AMP-TURNS	6090-1130	24655	6090-1130
KL	28	RELAY COIL 15V 125AMP-TURNS	6090-1130	24655	6090-1130
KS	27	SWITCH REED FORM A DRY	6090-0800	24655	6090-0800
KS	28	SWITCH REED FORM A DRY	6090-0800	24655	6090-0800
Q	1	TRANSISTOR 2N4125	8210-1125	04713	2N4125
Q	2	TRANSISTOR 2N4125	8210-1125	04713	2N4125
Q	3	TRANSISTOR 2N4125	8210-1125	04713	2N4125
Q	4	TRANSISTOR 2N4125	8210-1125	04713	2N4125
Q	5	TRANSISTOR 2N4125	8210-1125	04713	2N4125
Q	6	TRANSISTOR 2N4125	8210-1125	04713	2N4125
Q	7	TRANSISTOR 2N4125	8210-1125	04713	2N4125
Q	8	TRANSISTOR 2N4125	8210-1125	04713	2N4125
Q	9	TRANSISTOR 2N4125	8210-1125	04713	2N4125
Q	10	TRANSISTOR 2N4125	8210-1125	04713	2N4125
Q	11	TRANSISTOR 2N4125	8210-1125	04713	2N4125
Q	12	TRANSISTOR 2N4125	8210-1125	04713	2N4125

ELECTRICAL PARTS LIST (cont)

DIVIDER PC BOARD K P/N 1683-4721

REFDES		DESCRIPTION	PART NO.	FMC	MFGR PART NUMBER
Q	13	TRANSISTOR 2N4125	8210-1125	04713	2N4125
Q	14	TRANSISTOR 2N4125	8210-1125	04713	2N4125
Q	15	TRANSISTOR 2N4125	8210-1125	04713	2N4125
Q	16	TRANSISTOR 2N4125	8210-1125	04713	2N4125
Q	17	TRANSISTOR 2N4125	8210-1125	04713	2N4125
Q	18	TRANSISTOR	8210-1174	24655	8210-1174
Q	19	TRANSISTOR	8210-1174	24655	8210-1174
Q	20	TRANSISTOR	8210-1174	24655	8210-1174
Q	21	TRANSISTOR	8210-1174	24655	8210-1174
Q	22	TRANSISTOR	8210-1174	24655	8210-1174
Q	23	TRANSISTOR 2N1302	8210-1018	01295	2N1302
Q	24	TRANSISTOR 2N1302	8210-1018	01295	2N1302
Q	25	TRANSISTOR 2N1302	8210-1018	01295	2N1302
Q	26	TRANSISTOR 2N1302	8210-1018	01295	2N1302
Q	27	TRANSISTOR 2N1302	8210-1018	01295	2N1302
Q	28	TRANSISTOR 2N1302	8210-1018	01295	2N1302
Q	29	TRANSISTOR 2N1302	8210-1018	01295	2N1302
Q	30	TRANSISTOR 2N1302	8210-1018	01295	2N1302
Q	31	TRANSISTOR 2N1302	8210-1018	01295	2N1302
Q	32	TRANSISTOR 2N1302	8210-1018	01295	2N1302
Q	33	TRANSISTOR 2N1302	8210-1018	01295	2N1302
Q	34	TRANSISTOR 2N1302	8210-1018	01295	2N1302
Q	35	TRANSISTOR	8210-1081	24655	8210-1081
Q	36	TRANSISTOR	8210-1081	24655	8210-1081
Q	37	TRANSISTOR	8210-1081	24655	8210-1081
Q	38	TRANSISTOR	8210-1081	24655	8210-1081
Q	39	TRANSISTOR	8210-1081	24655	8210-1081
Q	40	TRANSISTOR 2N1303	8210-1019	01295	2N1303
Q	41	TRANSISTOR 2N1303	8210-1019	01295	2N1303
Q	42	TRANSISTOR 2N1303	8210-1019	01295	2N1303
Q	43	TRANSISTOR 2N1303	8210-1019	01295	2N1303
Q	44	TRANSISTOR 2N1303	8210-1019	01295	2N1303
Q	45	TRANSISTOR 2N1303	8210-1019	01295	2N1303
Q	46	TRANSISTOR 2N1303	8210-1019	01295	2N1303
Q	47	TRANSISTOR 2N1303	8210-1019	01295	2N1303
Q	48	TRANSISTOR 2N1303	8210-1019	01295	2N1303
Q	49	TRANSISTOR 2N1303	8210-1019	01295	2N1303
Q	50	TRANSISTOR 2N1303	8210-1019	01295	2N1303
Q	51	TRANSISTOR 2N1303	8210-1019	01295	2N1303
Q	52	TRANSISTOR TO-100	8210-1130	56289	TO-100
Q	54	TRANSISTOR 2N6008	8210-1083	03508	2N6008
Q	55	TRANSISTOR 2N4250	8210-1135	07263	2N4250
Q	56	TRANSISTOR 2N5249	8210-1077	03508	2N5249
Q	59	TRANSISTOR 2N3414	8210-1047	03508	2N3414
Q	60	TRANSISTOR 2N3414	8210-1047	03508	2N3414
R	1	RES COMP 2.7 K 5PCT 1/4W	6099-2275	81349	RCR07G272J
R	2	RES COMP 2.7 K 5PCT 1/4W	6099-2275	81349	RCR07G272J
R	3	RES COMP 2.7 K 5PCT 1/4W	6099-2275	81349	RCR07G272J
R	4	RES COMP 2.7 K 5PCT 1/4W	6099-2275	81349	RCR07G272J
R	5	RES COMP 2.7 K 5PCT 1/4W	6099-2275	81349	RCR07G272J
R	6	RES COMP 18 K 5PCT 1/4W	6099-3185	81349	RCR07G183J
R	7	RES COMP 18 K 5PCT 1/4W	6099-3185	81349	RCR07G183J
R	8	RES COMP 18 K 5PCT 1/4W	6099-3185	81349	RCR07G183J
R	9	RES COMP 18 K 5PCT 1/4W	6099-3185	81349	RCR07G183J
R	10	RES COMP 18 K 5PCT 1/4W	6099-3185	81349	RCR07G183J
R	11	RES COMP 18 K 5PCT 1/4W	6099-3185	81349	RCR07G183J
R	12	RES COMP 18 K 5PCT 1/4W	6099-3185	81349	RCR07G183J
R	13	RES COMP 18 K 5PCT 1/4W	6099-3185	81349	RCR07G183J
R	14	RES COMP 18 K 5PCT 1/4W	6099-3185	81349	RCR07G183J
R	15	RES COMP 18 K 5PCT 1/4W	6099-3185	81349	RCR07G183J
R	16	RES COMP 18 K 5PCT 1/4W	6099-3185	81349	RCR07G183J
R	17	RES COMP 18 K 5PCT 1/4W	6099-3185	81349	RCR07G183J
R	18	RES COMP 2.4 K OHM 5PCT 1/4W	6099-2245	81349	RCR07G242J
R	19	RES COMP 2.4 K OHM 5PCT 1/4W	6099-2245	81349	RCR07G242J
R	20	RES COMP 2.4 K OHM 5PCT 1/4W	6099-2245	81349	RCR07G242J
R	21	RES COMP 2.4 K OHM 5PCT 1/4W	6099-2245	81349	RCR07G242J
R	22	RES COMP 2.4 K OHM 5PCT 1/4W	6099-2245	81349	RCR07G242J
R	23	RES COMP 16 K OHM 5PCT 1/4W	6099-3165	81349	RCR07G163J
R	24	RES COMP 16 K OHM 5PCT 1/4W	6099-3165	81349	RCR07G163J
R	25	RES COMP 16 K OHM 5PCT 1/4W	6099-3165	81349	RCR07G163J
R	26	RES COMP 16 K OHM 5PCT 1/4W	6099-3165	81349	RCR07G163J
R	27	RES COMP 16 K OHM 5PCT 1/4W	6099-3165	81349	RCR07G163J

ELECTRICAL PARTS LIST (cont)

DIVIDER PC BOARD K P/N 1683-4721

REFDES		DESCRIPTION	PART NO.	FMC	MFGR PART NUMBER
R	28	RES COMP 16 K OHM 5PCT 1/4W	6099-3165	81349	RCR07G163J
R	29	RES COMP 16 K OHM 5PCT 1/4W	6099-3165	81349	RCR07G163J
R	30	RES COMP 16 K OHM 5PCT 1/4W	6099-3165	81349	RCR07G163J
R	31	RES COMP 16 K OHM 5PCT 1/4W	6099-3165	81349	RCR07G163J
R	32	RES COMP 16 K OHM 5PCT 1/4W	6099-3165	81349	RCR07G163J
R	33	RES COMP 16 K OHM 5PCT 1/4W	6099-3165	81349	RCR07G163J
R	34	RES COMP 16 K OHM 5PCT 1/4W	6099-3165	81349	RCR07G163J
R	35	RES COMP 5.1 K OHM 5PCT 1/4W	6099-2515	81349	RCR07G512J
R	36	RES COMP 5.1 K OHM 5PCT 1/4W	6099-2515	81349	RCR07G512J
R	37	RES COMP 5.1 K OHM 5PCT 1/4W	6099-2515	81349	RCR07G512J
R	38	RES COMP 5.1 K OHM 5PCT 1/4W	6099-2515	81349	RCR07G512J
R	39	RES COMP 5.1 K OHM 5PCT 1/4W	6099-2515	81349	RCR07G512J
R	40	RES COMP 13 K OHM 5PCT 1/4W	6099-3135	81349	RCR07G133J
R	41	RES COMP 13 K OHM 5PCT 1/4W	6099-3135	81349	RCR07G133J
R	42	RES COMP 13 K OHM 5PCT 1/4W	6099-3135	81349	RCR07G133J
R	43	RES COMP 13 K OHM 5PCT 1/4W	6099-3135	81349	RCR07G133J
R	44	RES COMP 13 K OHM 5PCT 1/4W	6099-3135	81349	RCR07G133J
R	45	RES COMP 13 K OHM 5PCT 1/4W	6099-3135	81349	RCR07G133J
R	46	RES COMP 13 K OHM 5PCT 1/4W	6099-3135	81349	RCR07G133J
R	47	RES COMP 13 K OHM 5PCT 1/4W	6099-3135	81349	RCR07G133J
R	48	RES COMP 13 K OHM 5PCT 1/4W	6099-3135	81349	RCR07G133J
R	49	RES COMP 13 K OHM 5PCT 1/4W	6099-3135	81349	RCR07G133J
R	50	RES COMP 13 K OHM 5PCT 1/4W	6099-3135	81349	RCR07G133J
R	51	RES COMP 13 K OHM 5PCT 1/4W	6099-3135	81349	RCR07G133J
R	52	RES COMP 10 K 5PCT 1/4W	6099-3105	81349	RCR07G103J
R	53	RES COMP 10 K 5PCT 1/4W	6099-3105	81349	RCR07G103J
R	54	RES COMP 10 K 5PCT 1/4W	6099-3105	81349	RCR07G103J
R	55	RES COMP 10 K 5PCT 1/4W	6099-3105	81349	RCR07G103J
R	56	RES COMP 10 K 5PCT 1/4W	6099-3105	81349	RCR07G103J
R	57	RES COMP 33 K 5PCT 1/4W	6099-3335	81349	RCR07G333J
R	58	RES COMP 33 K 5PCT 1/4W	6099-3335	81349	RCR07G333J
R	59	RES COMP 33 K 5PCT 1/4W	6099-3335	81349	RCR07G333J
R	60	RES COMP 33 K 5PCT 1/4W	6099-3335	81349	RCR07G333J
R	61	RES COMP 33 K 5PCT 1/4W	6099-3335	81349	RCR07G333J
R	62	RES COMP 33 K 5PCT 1/4W	6099-3335	81349	RCR07G333J
R	63	RES COMP 33 K 5PCT 1/4W	6099-3335	81349	RCR07G333J
R	64	RES COMP 33 K 5PCT 1/4W	6099-3335	81349	RCR07G333J
R	65	RES COMP 33 K 5PCT 1/4W	6099-3335	81349	RCR07G333J
R	66	RES COMP 33 K 5PCT 1/4W	6099-3335	81349	RCR07G333J
R	67	RES COMP 33 K 5PCT 1/4W	6099-3335	81349	RCR07G333J
R	68	RES COMP 33 K 5PCT 1/4W	6099-3335	81349	RCR07G333J
R	69	RES COMP 7.5 K OHM 5PCT 1/4W	6099-2755	81349	RCR07G752J
R	70	RES COMP 7.5 K OHM 5PCT 1/4W	6099-2755	81349	RCR07G752J
R	71	RES COMP 7.5 K OHM 5PCT 1/4W	6099-2755	81349	RCR07G752J
R	72	RES COMP 7.5 K OHM 5PCT 1/4W	6099-2755	81349	RCR07G752J
R	73	RES COMP 7.5 K OHM 5PCT 1/4W	6099-2755	81349	RCR07G752J
R	74	RES COMP 33 K 5PCT 1/4W	6099-3335	81349	RCR07G333J
R	75	RES COMP 33 K 5PCT 1/4W	6099-3335	81349	RCR07G333J
R	76	RES COMP 33 K 5PCT 1/4W	6099-3335	81349	RCR07G333J
R	77	RES COMP 33 K 5PCT 1/4W	6099-3335	81349	RCR07G333J
R	78	RES COMP 33 K 5PCT 1/4W	6099-3335	81349	RCR07G333J
R	79	RES COMP 33 K 5PCT 1/4W	6099-3335	81349	RCR07G333J
R	80	RES COMP 33 K 5PCT 1/4W	6099-3335	81349	RCR07G333J
R	81	RES COMP 33 K 5PCT 1/4W	6099-3335	81349	RCR07G333J
R	82	RES COMP 33 K 5PCT 1/4W	6099-3335	81349	RCR07G333J
R	83	RES COMP 33 K 5PCT 1/4W	6099-3335	81349	RCR07G333J
R	84	RES COMP 33 K 5PCT 1/4W	6099-3335	81349	RCR07G333J
R	85	RES COMP 33 K 5PCT 1/4W	6099-3335	81349	RCR07G333J
R	86	RES GR 40K OHM .01 PCT 1W	6983-5011	24655	6983-5011
R	88	RES GR 80K OHM .01 PCT 1W	6983-5015	24655	6983-5015
R	89	RES GR 40K OHM .01 PCT 1W	6983-5011	24655	6983-5011
R	90	RES GR 40K OHM .01 PCT 1W	6983-5011	24655	6983-5011
R	91	RES GR 40K OHM .01 PCT 1W	6983-5011	24655	6983-5011
R	92	RES GR 16.0012K OHM .01 PCT 1/2W	6982-5008	24655	6982-5008
R	93	RES GR 13.33K OHM .01 PCT 1/2W	6982-5009	24655	6982-5009
R	94	RES GR 13.33K OHM .01 PCT 1/2W	6982-5009	24655	6982-5009
R	96	RES GR 160K OHM .1 PCT 1W	6983-6011	24655	6983-6011
R	97	RES GR 80K OHM .1 PCT 1W	6983-5012	24655	6983-5012
R	98	RES GR 80K OHM .1 PCT 1W	6983-5012	24655	6983-5012
R	99	RES GR 80K OHM .01 PCT 1W	6983-5015	24655	6983-5015
R	100	RES GR 32.002K OHM .1 PCT 1W	6983-5013	24655	6983-5013
R	101	RES GR 204.48K OHM .1 PCT 1W	6983-6010	24655	6983-6010
R	102	RES GR 204.48K OHM .1 PCT 1W	6983-6010	24655	6983-6010

File Courtesy of GRWiki.org

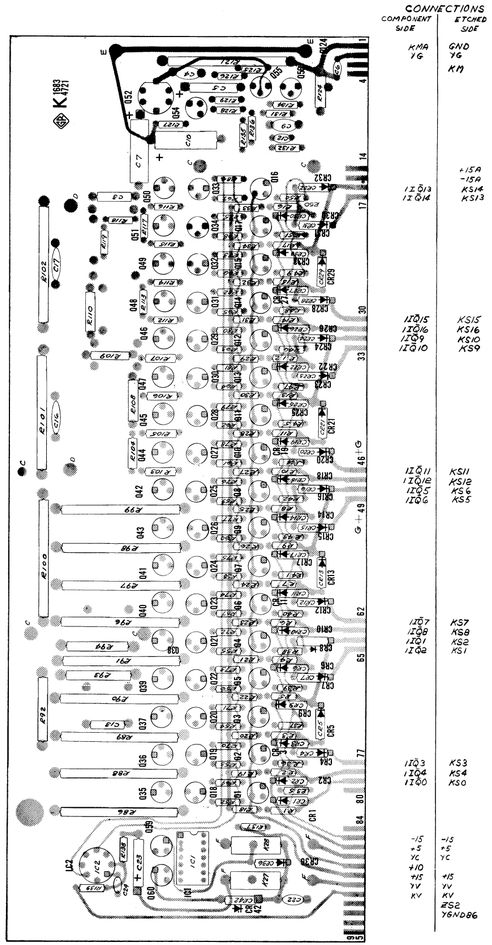

NOTE: *Orientation*: Viewed from parts side. *Part number:* Refer to caption. *Symbolism:* Outlined area = part; gray ckt pattern (if any) = parts side, black = other side. *Pins:* Square pad in ckt pattern = collector, I-C pin 1, cathode (of diode), or + end (of capacitor).

K-divider (P/N 1683-4721) etched-circuit board layout.

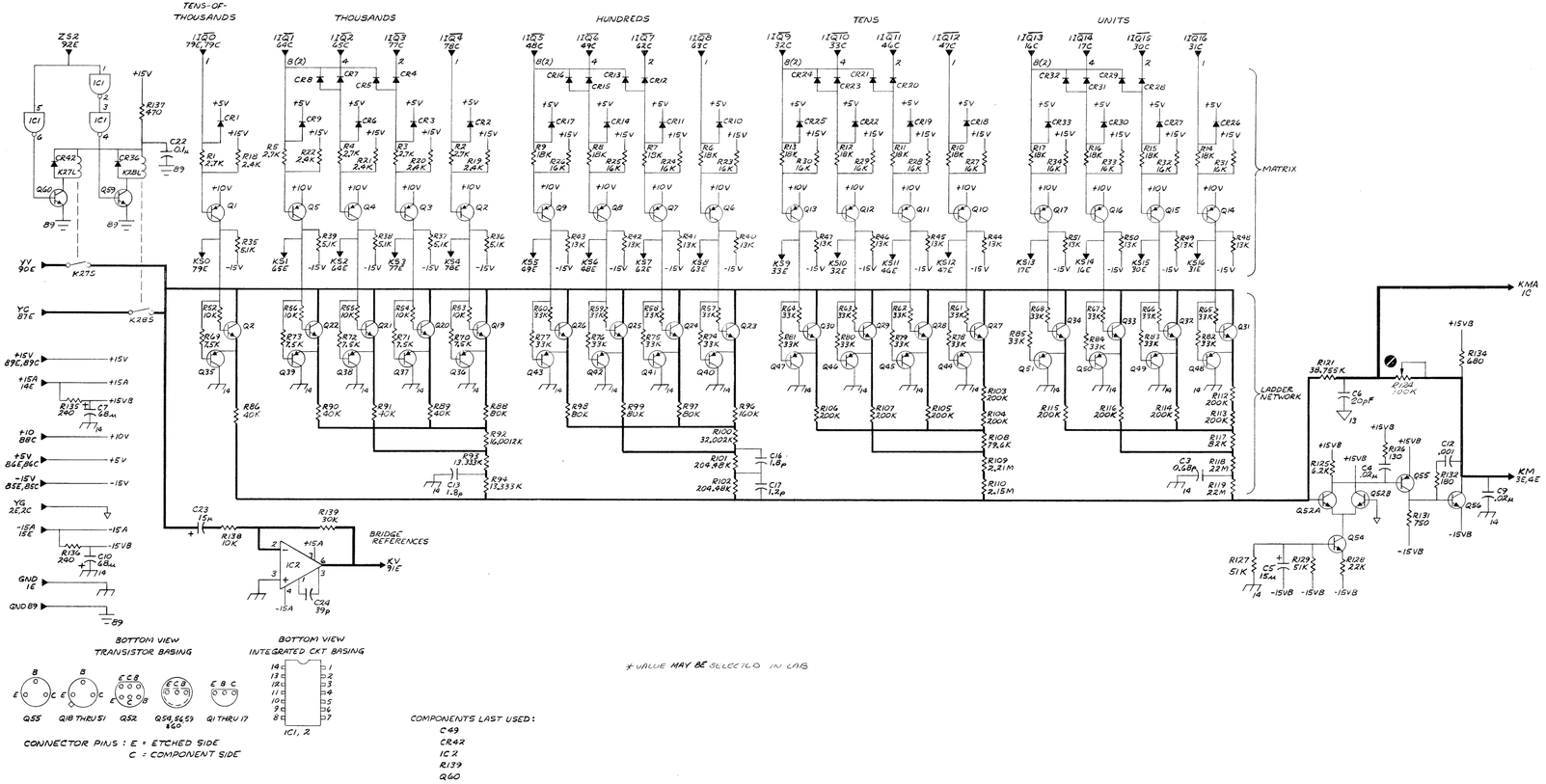

RESISTANCE IS IN OHMS, K=10^3, M=10^6
CAPACITANCE IS IN FARADS, μ=10^{-6}, p=10^{-12}
VOLTAGES EXPLAINED IN INSTRUCTION BOOK SERVICE NOTES
PANEL CONTROL
REAR CONTROL
SCREWDRIVER CONTROL WIRE TIE TP=TEST POINT
COMPLETE REFERENCE DESIGNATION INCLUDES SUBASSEMBLY LETTER, C-R1, B-R1, ETC.

SWITCH NUMBERING
FRONT-REAR
CONTACTS FIRST CONTACT CW FROM STRUT SCREW ABOVE KEY IS .01
SECTION. SECTION NEAREST PANEL IS 1.
ROTORS SHOWN CCW

CONNECTIONS
OUTPUT LEAVES SUBASSEMBLY
INPUT FROM DIFFERENT SUBASSEMBLY
OUTPUT REMAINS ON SUBASSEMBLY
INPUT FROM SAME SUBASSEMBLY

Figure 6-14. K-divider board schematic, K.

File Courtesy of GRWiki.org

DIVIDER PC BOARD K P/N 1683-4721

REFDES	DESCRIPTION	PART NO.	FMC	MFGR PART NUMBER
R 103	RES FLM 200K 1 PCT 1/8W	6250-3200	81349	RN55D2003F
R 104	RES FLM 200K 1 PCT 1/8W	6250-3200	81349	RN55D2003F
R 105	RES FLM 200K 1 PCT 1/8W	6250-3200	81349	RN55D2003F
R 106	RES FLM 200K 1 PCT 1/8W	6250-3200	81349	RN55D2003F
R 107	RES FLM 200K 1 PCT 1/8W	6250-3200	81349	RN55D2003F
R 108	RES FLM 79.6K 1/2 PCT 1/4W	6351-2796	81349	RN60D7962D
R 109	RES FLM 2.21M 1 PCT 1/4W	6350-4221	81349	RN60D2214F
R 110	RES FLM 2.15M 1 PCT 1/4W	6350-4215	81349	RN60D2154F
R 112	RES COMP 200 K OHM 5PCT 1/4W	6099-4205	81349	RCR07G204J
R 113	RES COMP 200 K OHM 5PCT 1/4W	6099-4205	81349	RCR07G204J
R 114	RES COMP 200 K OHM 5PCT 1/4W	6099-4205	81349	RCR07G204J
R 115	RES COMP 200 K OHM 5PCT 1/4W	6099-4205	81349	RCR07G204J
R 116	RES COMP 200 K OHM 5PCT 1/4W	6099-4205	81349	RCR07G204J
R 117	RES COMP 82 K 5PCT 1/4W	6099-3825	81349	RCR07G823J
R 118	RES COMP 22 M 5PCT 1/4W	6099-6225	81349	RCR07G226J
R 119	RES COMP 22 M 5PCT 1/4W	6099-6225	81349	RCR07G226J
R 121	RES GR 38.755K OHM .01 PCT 1W	6983-5034	24655	6983-5034
R 124	POT CERM TRM 100K OHM 10 PCT 15T	6049-0192	80294	3006P-1-104
R 125	RES COMP 6.2 K OHM 5PCT 1/4W	6099-2625	81349	RCR07G622J
R 126	RES COMP 130 OHM 5PCT 1/4W	6099-1135	81349	RCR07G131J
R 127	RES COMP 51 K OHM 5PCT 1/4W	6099-3515	81349	RCR07G513J
R 128	RES COMP 22 K 5PCT 1/4W	6099-3225	81349	RCR07G223J
R 129	RES COMP 51 K OHM 5PCT 1/4W	6099-3515	81349	RCR07G513J
R 131	RES COMP 750 OHM 5PCT 1/4W	6099-1755	81349	RCR07G751J
R 132	RES COMP 180 OHM 5PCT 1/4W	6099-1185	81349	RCR07G181J
R 134	RES COMP 680 OHM 5PCT 1/4W	6099-1685	81349	RCR07G681J
R 135	RES COMP 240 OHM 5PCT 1/4W	6099-1245	81349	RCR07G241J
R 136	RES COMP 240 OHM 5PCT 1/4W	6099-1245	81349	RCR07G241J
R 137	RES COMP 470 OHM 5PCT 1/4W	6099-1475	81349	RCR07G471J
R 138	RES COMP 10 K 5PCT 1/4W	6099-3105	81349	RCR07G103J
R 139	RES COMP 30 K OHM 5PCT 1/4W	6099-3305	81349	RCR07G303J

ELECTRICAL PARTS LIST

LEAKAGE PC BOARD L P/N 1683-4724

REFDES	DESCRIPTION	PART NO.	FMC	MFGR PART NUMBER
C 1	CAP CER DISC 100PF 10PCT 500V	4404-1108	72982	0831082Z5F00101K
C 2	CAP CER DISC 100PF 10PCT 500V	4404-1108	72982	0831082Z5F00101K
C 3	CAP TANT 120 UF 20PCT 10V	4450-5616	56289	150D127X0010R2
C 4	CAP TANT 10 UF 20PCT 20V	4450-5100	56289	150D106X0020B2
C 5	CAP MYLAR 1UF 10 PCT 200V	4860-8275	56289	410P 1 UF 10PCT
C 6	CAP MYLAR .1UF 1 PCT 400V	4860-7886	56289	410P 0.1 UF 1PCT
C 7	CAP MYLAR .01UF 10 PCT 100V	4860-7750	56289	410P .01 UF 10PCT
C 8	CAP CER DISC 39PF 10PCT 500V	4404-0398	72982	0831082Z5D00390K
C 9	CAP CER DISC .01UF 80/20PCT 100V	4401-3100	72982	0805540Z5U00103Z
C 10	CAP CER DISC 100PF 10PCT 500V	4404-1108	72982	0831082Z5F00101K
C 11	CAP CER TUB 10 PF 10PCT 500V	4400-1100	95121	QC 10PF 10PCT 500V
C 12	CAP CER SQ .10UF 80/20PCT 100V	4403-4100	72982	8131M1006511047
C 13	CAP CER MONO 1UF 20PCT 50VGP	4400-2070	72982	8131-M05G-651-105M
CR 1	DIODE 1N4151 75PIV IR.1UA SI	6082-1001	14433	1N3604
CR 2	DIODE 1N4151 75PIV IR.1UA SI	6082-1001	14433	1N3604
CR 3	DIODE 1N4151 75PIV IR.1UA SI	6082-1001	14433	1N3604
CR 4	DIODE 1N4151 75PIV IR.1UA SI	6082-1001	14433	1N3604
CR 7	ZENER 1N748A 3.9V 5PCT .4W	6083-1002	14433	1N748A
CR 8	ZENER 1N753A 6.2V 5PCT .4W	6083-1006	14433	1N753A
CR 9	DIODE 1N4151 75PIV IR.1UA SI	6082-1001	14433	1N3604
CR 10	DIODE RECTIFIER 1N645	6082-1016	14433	1N645
CR 11	DIODE RECTIFIER 1N645	6082-1016	14433	1N645
CR 12	DIODE 1N4151 75PIV IR.1UA SI	6082-1001	14433	1N3604
CR 13	DIODE 1N995 15PIV IR 10UA GE	6082-1002	03877	1N995
CR 14	DIODE 1N995 15PIV IR 10UA GE	6082-1002	03877	1N995
KL 1	RELAY COIL 15V 125AMP-TURNS	6090-1130	24655	6090-1130
KL 2	RELAY COIL 15V 125AMP-TURNS	6090-1130	24655	6090-1130
KL 3	RELAY COIL 15V 125AMP-TURNS	6090-1130	24655	6090-1130
KS 1	SWITCH REED FORM A DRY	6090-0800	24655	6090-0800
KS 2	SWITCH REED FORM A DRY	6090-0800	24655	6090-0800
KS 3	SWITCH REED FORM A DRY	6090-0800	24655	6090-0800
Q 1	TRANSISTOR 2N3414	8210-1047	03508	2N3414
Q 2	TRANSISTOR 2N3414	8210-1047	03508	2N3414
Q 3	TRANSISTOR 2N4125	8210-1125	04713	2N4125
Q 4	TRANSISTOR 2N4125	8210-1125	04713	2N4125
Q 5	TRANSISTOR TIS-74	8210-1202	01295	TIS-74
Q 6	TRANSISTOR 2N5459	8210-1177	04713	2N5459
Q 7	TRANSISTOR 2N3414	8210-1047	03508	2N3414
Q 8	TRANSISTOR 2N3414	8210-1047	03508	2N3414
R 1	RES FLM 100 OHM 1 PCT 1/4W	6350-0100	81349	RN60D1000F
R 2	RES FLM 1K 1 PCT 1/8W	6250-1100	81349	RN55D1001F
R 3	RES FLM 10.1K 1 PCT 1/4W	6350-2101	81349	RN60D1012F
R 4	RES FLM 110K 1 PCT 1/2W	6450-3110	81349	RN65D1103F
R 5	RES COMP 5.1 M OHM 5PCT 1/4W	6099-5515	81349	RCR07G515J
R 6	POT WW TRM 20K OHM 10 PCT 20T	6051-3209	80294	3005P-1-203
R 7	RES COMP 75 K OHM 5PCT 1/4W	6099-3755	81349	RCR07G753J
R 8	RES COMP 10 M 5PCT 1/4W	6099-6105	81349	RCR07G106J
R 9	RES FLM 150 OHM 1 PCT 1/8W	6250-0150	81349	RN55D1500F
R 10	RES FLM 42.2K 1 PCT 1/2W	6450-2422	81349	RN65D4222F
R 11	RES FLM 10.5K 1 PCT 1/8W	6250-2105	81349	RN55D1052F
R 12	RES COMP 100 K 5PCT 1/4W	6099-4105	81349	RCR07G104J
R 14	POT WW TRM 20K OHM 10 PCT 20T	6051-3209	80294	3005P-1-203
R 16	RES COMP 100 OHM 5PCT 1/4W	6099-1105	81349	RCR07G101J
R 17	RES COMP 100 K 5PCT 1/4W	6099-4105	81349	RCR07G104J
R 18	RES COMP 220 OHM 5PCT 1/4W	6099-1225	81349	RCR07G221J
R 19	RES COMP 300 OHM 5PCT 1/4W	6099-1305	81349	RCR07G301J
R 20	RES FLM 1M 1 PCT 1/8W	6250-4100	81349	RN55D1004F
R 21	RES COMP 5.6 K 5PCT 1/4W	6099-2565	81349	RCR07G562J
R 22	RES COMP 47 K 5PCT 1/4W	6099-3475	81349	RCR07G473J
R 23	RES COMP 15 K 5PCT 1/4W	6099-3155	81349	RCR07G153J
R 24	RES COMP 5.6 K 5PCT 1/4W	6099-2565	81349	RCR07G562J
R 25	RES COMP 47 K 5PCT 1/4W	6099-3475	81349	RCR07G473J
R 26	RES COMP 15 K 5PCT 1/4W	6099-3155	81349	RCR07G153J
R 28	RES COMP 1.0 K 5PCT 1/4W	6099-2105	81349	RCR07G102J
R 29	POT WW TRM 20K OHM 10 PCT 20T	6051-3209	80294	3005P-1-203
R 30	RES COMP 5.1 M OHM 5PCT 1/4W	6099-5515	81349	RCR07G515J
R 31	RES COMP 1.0 K 5PCT 1/4W	6099-2105	81349	RCR07G102J
R 32	RES COMP 5.6 K 5PCT 1/4W	6099-2565	81349	RCR07G562J
R 33	RES COMP 200 K OHM 5PCT 1/4W	6099-4205	81349	RCR07G204J

ELECTRICAL PARTS LIST (cont)

LEAKAGE PC BOARD L P/N 1683-4724

REFDES	DESCRIPTION	PART NO.	FMC	MFGR PART NUMBER
IC 1	IC LINEAR LM301A	5432-1004	12040	LM301AH
IC 2	IC LINEAR VA710C	5432-7101	04713	MC1710CG
IC 3	ICD DTUL936 14D INVERTER	5431-9362	01295	SN15836N
IC 4	ICD DTUL936 14D INVERTER	5431-9362	01295	SN15836N
IC 5	ICD DTUL946 14D GATE	5431-9462	01295	SN15846N
IC 6	ICD DTUL945 14D CLK FLIFLO	5431-9452	01295	SN15845N

File Courtesy of GRWiki.org

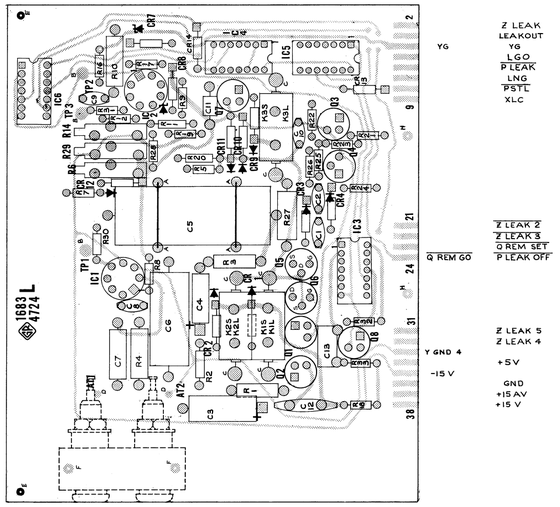

NOTE: *Orientation:* Viewed from parts side. *Part number:* Refer to caption. *Symbolism:* Outlined area = part; gray ckt pattern (if any) = parts side, black = other side.

Leakage-current (P/N 1683-4724) etched-circuit board layout.

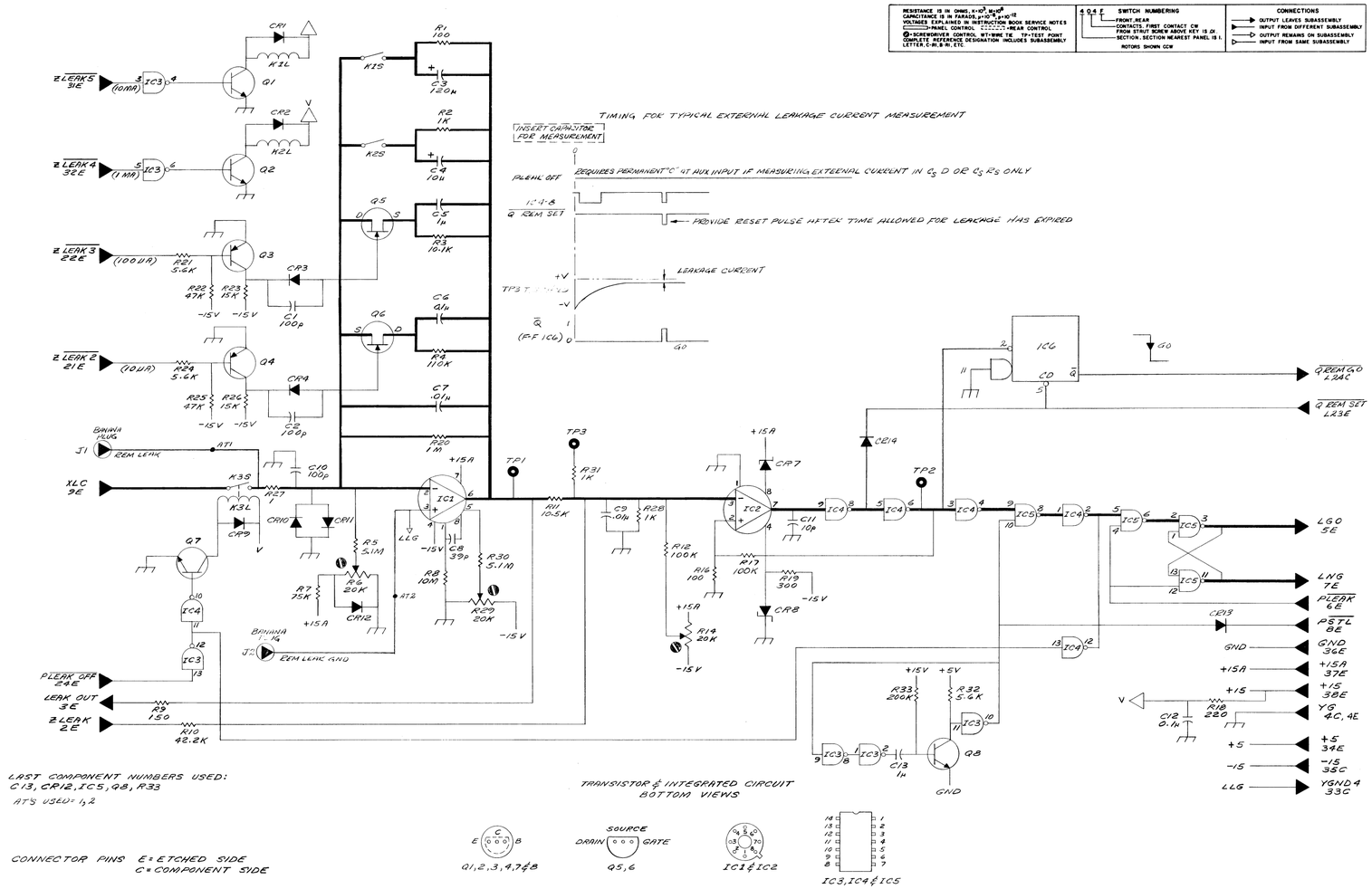

Figure 6-15. Leakage-current board schematic, L.

File Courtesy of GRWiki.org

ELECTRICAL PARTS LIST

MOTHER PC BOARD M P/N 1683-4706

REFDES		DESCRIPTION	PART NO.	FMC	MFGR PART NUMBER
C	1	CAP ASM POLY	4872-5000	24655	4872-5000
C	2	CAP ASM POLY	4872-5001	24655	4872-5001
C	5	FACTORY SELECT	---------	-----	--------
C	6	FACTORY SELECT	---------	-----	--------
C	7	FACTORY SELECT	---------	-----	--------
C	8	FACTORY SELECT	---------	-----	--------
C	9	FACTORY SELECT	---------	-----	--------
C	10	FACTORY SELECT	---------	-----	--------
C	11	FACTORY SELECT	---------	-----	--------
C	12	FACTORY SELECT	---------	-----	--------
C	13	FACTORY SELECT	---------	-----	--------
C	14	CAP CER TRIM 5-25 PF	4910-1150	72982	557-051 A 5-25PF
C	15	CAP CER SQ .10UF 80/20PCT 100V	4403-4100	72982	8131M100651104Z
C	16	CAP CER SQ .10UF 80/20PCT 100V	4403-4100	72982	8131M100651104Z
C	17	CAP CER TUB 2.2 PF 10PCT 500V	4400-0200	95121	QC 2.2PF 10PCT 500V
CR	1	DIODE 1N4151 75PIV IR.1UA SI	6082-1001	14433	1N3604
CR	2	DIODE 1N4151 75PIV IR.1UA SI	6082-1001	14433	1N3604
CR	3	DIODE 1N4151 75PIV IR.1UA SI	6082-1001	14433	1N3604
CR	4	DIODE 1N4151 75PIV IR.1UA SI	6082-1001	14433	1N3604
CR	5	DIODE 1N4151 75PIV IR.1UA SI	6082-1001	14433	1N3604
CR	6	DIODE 1N4151 75PIV IR.1UA SI	6082-1001	14433	1N3604
IC	1	ICD DTUL936 14D INVERTER	5431-9362	01295	SN15836N
IC	2	ICD DTUL936 14D INVERTER	5431-9362	01295	SN15836N
KL	1	RELAY COIL 15V 125AMP-TURNS	6090-1130	24655	6090-1130
KL	2	RELAY COIL 15V 125AMP-TURNS	6090-1130	24655	6090-1130
KL	3	RELAY COIL 15V 125AMP-TURNS	6090-1130	24655	6090-1130
KL	4	RELAY COIL 15V 125AMP-TURNS	6090-1130	24655	6090-1130
KL	5	RELAY COIL 15V 125AMP-TURNS	6090-1130	24655	6090-1130
KL	6	RELAY COIL 15V 125AMP-TURNS	6090-1130	24655	6090-1130
KL	7	RELAY COIL 15V 125AMP-TURNS	6090-1130	24655	6090-1130
KS	1	SWITCH REED FORM A DRY	6090-0800	24655	6090-0800
KS	2	SWITCH REED FORM A DRY	6090-0800	24655	6090-0800
KS	3	SWITCH REED FORM A DRY	6090-0800	24655	6090-0800
KS	4	SWITCH REED FORM A DRY	6090-0800	24655	6090-0800
KS	5	SWITCH REED FORM A DRY	6090-0800	24655	6090-0800
KS	6	SWITCH REED FORM A DRY	6090-0800	24655	6090-0800
KS	7	SWITCH REED FORM A DRY	6090-0800	24655	6090-0800
Q	1	TRANSISTOR 2N3414	8210-1047	03508	2N3414
Q	2	TRANSISTOR 2N3414	8210-1047	03508	2N3414
Q	3	TRANSISTOR 2N3414	8210-1047	03508	2N3414
Q	4	TRANSISTOR 2N3414	8210-1047	03508	2N3414
Q	5	TRANSISTOR 2N3414	8210-1047	03508	2N3414
Q	6	TRANSISTOR 2N3414	8210-1047	03508	2N3414
R	1	RES GR 2K OHM .01 PCT 1W	6933-4036	24655	6983-4036
R	2	RES GR 2.6526K OHM .01 PCT 1W	6983-4037	24655	6983-4037
R	3	RES GR 1.5079K OHM .01 PCT 1W	6983-4038	24655	6983-4038
R	20	RES COMP 150 OHM 5PCT 1/4W	6099-1155	81349	RCR07G151J
R	21	RES COMP 150 OHM 5PCT 1/4W	6099-1155	81349	RCR07G151J
R	123	RES GR 1300 OHM 5 PCT 1/2W	6982-3000	24655	6982-3000

File Courtesy of GRWiki.org

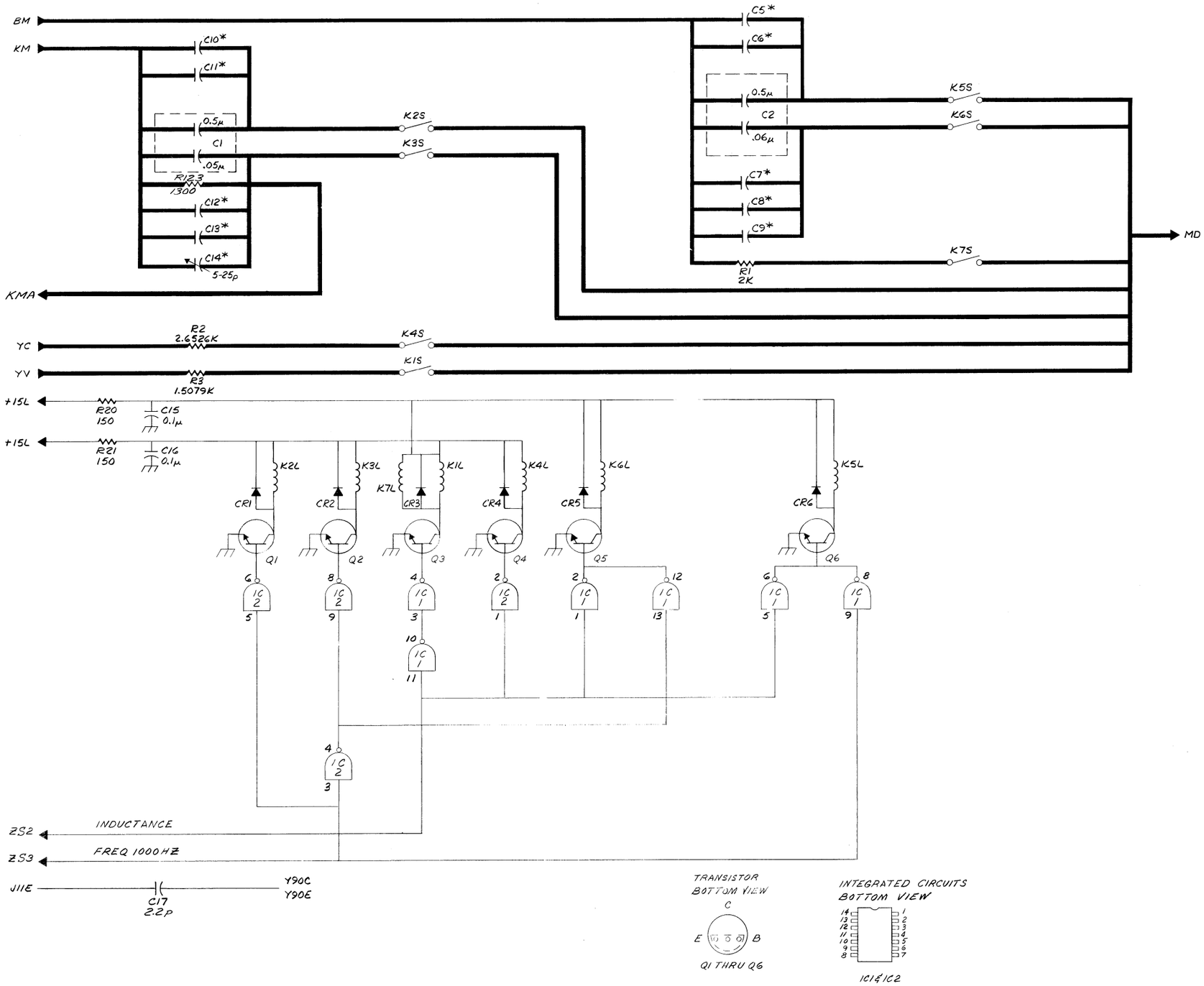

MOTHER BOARD RELAY SWITCHING

FUNCTION	LOGIC SIGNALS		RELAYS						
	ZS2	ZS3	K1	K2	K3	K4	K5	K6	K7
LsRs 120Hz	1	0	1	1	0	0	0	0	1
LsRs 1KHz	1	1	1	0	1	0	0	0	1
CsD 120Hz	0	0	0	1	0	1	1	0	0
CsD 1KHz	0	1	0	0	1	1	0	1	0
CsRs 120Hz	0	0	0	1	0	1	1	0	0
CsRs 1KHz	0	1	0	0	1	1	0	1	0
			AI SWITCHES IN:						
			G_T (R3)	C_S (C1) C10 C11	C_S (C1) C12 C13 C14	G_B (R2)	C_B (C2) C5 C6	C_B (C2) C7 C8 C9	G_S (R1)

FOR RELAYS:
1 = CLOSED (ENERGIZED)
0 = OPENED (DE-ENERGIZED)

LAST COMPONENT NUMBER USED:
C17
CR6
IC2
Q2
R21

CONNECTOR PINS: E = ETCHED SIDE
C = COMPONENT SIDE

* VALUE & TYPE NO. TO BE DETERMINED BY LAB

RESISTANCE IS IN OHMS, K=10^3, M=10^6
CAPACITANCE IS IN FARADS, μ=10^{-6}, p=10^{-12}
VOLTAGES EXPLAINED IN INSTRUCTION BOOK SERVICE NOTES
▭ = PANEL CONTROL ▭ = REAR CONTROL
⊘ = SCREWDRIVER CONTROL WT = WIRE TIE TP = TEST POINT
COMPLETE REFERENCE DESIGNATION INCLUDES SUBASSEMBLY LETTER, C-R1, B-R1, ETC.

4 0 4 F SWITCH NUMBERING
F — FRONT, REAR
4 — CONTACTS. FIRST CONTACT CW FROM STRUT SCREW ABOVE KEY IS .01.
0 — SECTION. SECTION NEAREST PANEL IS 1.
ROTORS SHOWN CCW

CONNECTIONS
→ OUTPUT LEAVES SUBASSEMBLY
▶ INPUT FROM DIFFERENT SUBASSEMBLY
→ OUTPUT REMAINS ON SUBASSEMBLY
▷ INPUT FROM SAME SUBASSEMBLY

Figure 6-16. Mother board schematic, M.

File Courtesy of GRWiki.org

ELECTRICAL PARTS LIST

DATA OUTPUT PC BOARD N P/N 1683-4703

REFDES		DESCRIPTION	PART NO.	FMC	MFGR PART NUMBER
C	1	CAP CER DISC 1000PF 80/20PCT 500	4404-2109	72982	0831082Z5U00102Z
C	2	CAP CER DISC 1000PF 80/20PCT 500	4404-2109	72982	0831082Z5U00102Z
C	3	CAP CER SQ .10UF 80/20PCT 100V	4403-4100	72982	8131M100651104Z
C	4	CAP CER SQ .10UF 80/20PCT 100V	4403-4100	72982	8131M100651104Z
C	5	CAP CER DISC .01UF 80/20PCT 100V	4401-3100	72982	0805540Z5U00103Z
C	6	CAP CER MONO 1UF 20PCT 50VGP	4400-2070	72982	8131-M050-651-105M
CR	1	DIODE 1N4151 75PIV IR.1UA SI	6082-1001	14433	1N3604
CR	2	DIODE 1N4151 75PIV IR.1UA SI	6082-1001	14433	1N3604
CR	3	DIODE 1N4151 75PIV IR.1UA SI	6082-1001	14433	1N3604
CR	4	DIODE 1N4151 75PIV IR.1UA SI	6082-1001	14433	1N3604
IC	1	IC LINEAR VA710C	5432-7101	04713	MC1710CG
IC	2	ICD DTUL9112 14D HI VOLT INV	5431-9112	07263	9112DC
IC	3	ICD DTUL936 14D INVERTER	5431-9362	01295	SN15836N
IC	4	ICD DTUL9112 14D HI VOLT INV	5431-9112	07263	9112DC
IC	5	ICD DTUL9112 14D HI VOLT INV	5431-9112	07263	9112DC
IC	6	ICD DTUL9112 14D HI VOLT INV	5431-9112	07263	9112DC
IC	7	ICD DTUL930 14D GATE	5431-9302	01295	SN15830N
IC	8	ICD DTUL930 14D GATE	5431-9302	01295	SN15830N
IC	9	ICD DTUL9112 14D HI VOLT INV	5431-9112	07263	9112DC
IC	10	ICD DTUL9112 14D HI VOLT INV	5431-9112	07263	9112DC
IC	11	ICD DTUL9112 14D HI VOLT INV	5431-9112	07263	9112DC
IC	12	ICD DTUL946 14D GATE	5431-9462	01295	SN15846N
Q	1	TRANSISTOR 2N3414	8210-1047	03508	2N3414
Q	2	TRANSISTOR 2N3414	8210-1047	03508	2N3414
Q	3	TRANSISTOR 2N3414	8210-1047	03508	2N3414
R	1	RES COMP 24 K OHM 5PCT 1/4W	6099-3245	81349	RCR07G243J
R	2	RES COMP 9.1 K OHM 5PCT 1/4W	6099-2915	81349	RCR07G912J
R	3	RES COMP 9.1 K OHM 5PCT 1/4W	6099-2915	81349	RCR07G912J
R	4	RES COMP 20 K OHM 5PCT 1/4W	6099-3205	81349	RCR07G203J
R	5	RES COMP 1.0 K 5PCT 1/4W	6099-2105	81349	RCR07G102J
R	6	RES COMP 1.0 K 5PCT 1/4W	6099-2105	81349	RCR07G102J
R	7	RES COMP 270 OHM 5PCT 1/4W	6099-1275	81349	RCR07G271J
R	8	RES COMP 1.0 K 5PCT 1/4W	6099-2105	81349	RCR07G102J
R	9	RES COMP 1.0 K 5PCT 1/4W	6099-2105	81349	RCR07G102J
R	10	RES COMP 2.4 K OHM 5PCT 1/4W	6099-2245	81349	RCR07G242J
R	11	RES COMP 51 OHM 5PCT 1/4W	6099-0515	81349	RCR07G510J
R	13	RES COMP 15 K 5PCT 1/4W	6099-3155	81349	RCR07G153J
R	14	RES COMP 20 K OHM 5PCT 1/4W	6099-3205	81349	RCR07G203J
R	15	RES COMP 3.0 K OHM 5PCT 1/4W	6099-2305	81349	RCR07G302J
R	16	RES COMP 5.6 K 5PCT 1/4W	6099-2565	81349	RCR07G562J
R	17	RES COMP 10 K 5PCT 1/4W	6099-3105	81349	RCR07G103J
R	18	RES COMP 100 OHM 5PCT 1/4W	6099-1105	81349	RCR07G101J
R	19	RES COMP 5.6 K 5PCT 1/4W	6099-2565	81349	RCR07G562J

ELECTRICAL PARTS LIST

DATA OUTPUT PC BOARD N P/N 1683-4704

REFDES		DESCRIPTION	PART NO.	FMC	MFGR PART NUMBER
C	1	CAP CER DISC 1000PF 80/20PCT 500	4404-2109	72982	0831082Z5U00102Z
C	2	CAP CER DISC 1000PF 80/20PCT 500	4404-2109	72982	0831082Z5U00102Z
C	3	CAP CER SQ .10UF 80/20PCT 100V	4403-4100	72982	8131M100651104Z
C	4	CAP CER SQ .10UF 80/20PCT 100V	4403-4100	72982	8131M100651104Z
C	5	CAP CER DISC .01UF 80/20PCT 100V	4401-3100	72982	0805540Z5U00103Z
C	6	CAP CER MONO 1UF 20PCT 50VGP	4400-2070	72982	8131-M050-651-105M
CR	1	DIODE 1N4151 75PIV IR.1UA SI	6082-1001	14433	1N3604
CR	2	DIODE 1N4151 75PIV IR.1UA SI	6082-1001	14433	1N3604
CR	3	DIODE 1N4151 75PIV IR.1UA SI	6082-1001	14433	1N3604
CR	4	DIODE 1N4151 75PIV IR.1UA SI	6082-1001	14433	1N3604
IC	1	IC LINEAR VA710C	5432-7101	04713	MC1710CG
IC	2	ICD 9016 HEX INVERTER	5431-9608	12040	DM9016CN
IC	3	ICD DTUL936 14D INVERTER	5431-9362	01295	SN15836N
IC	4	ICD 9016 HEX INVERTER	5431-9608	12040	DM9016CN
IC	5	ICD 9016 HEX INVERTER	5431-9608	12040	DM9016CN
IC	6	ICD 9016 HEX INVERTER	5431-9608	12040	DM9016CN
IC	7	ICD DTUL930 14D GATE	5431-9302	01295	SN15830N
IC	8	ICD DTUL930 14D GATE	5431-9302	01295	SN15830N
IC	9	ICD 9016 HEX INVERTER	5431-9608	12040	DM9016CN
IC	10	ICD 9016 HEX INVERTER	5431-9608	12040	DM9016CN
IC	11	ICD 9016 HEX INVERTER	5431-9608	12040	DM9016CN
IC	12	ICD DTUL946 14D GATE	5431-9462	01295	SN15846N
Q	1	TRANSISTOR 2N3414	8210-1047	03508	2N3414
Q	2	TRANSISTOR 2N3414	8210-1047	03508	2N3414
Q	3	TRANSISTOR 2N3414	8210-1047	03508	2N3414
R	1	RES COMP 24 K OHM 5PCT 1/4W	6099-3245	81349	RCR07G243J
R	2	RES COMP 9.1 K OHM 5PCT 1/4W	6099-2915	81349	RCR07G912J
R	3	RES COMP 9.1 K OHM 5PCT 1/4W	6099-2915	81349	RCR07G912J
R	4	RES COMP 20 K OHM 5PCT 1/4W	6099-3205	81349	RCR07G203J
R	5	RES COMP 1.0 K 5PCT 1/4W	6099-2105	81349	RCR07G102J
R	6	RES COMP 1.0 K 5PCT 1/4W	6099-2105	81349	RCR07G102J
R	7	RES COMP 270 OHM 5PCT 1/4W	6099-1275	81349	RCR07G271J
R	8	RES COMP 1.0 K 5PCT 1/4W	6099-2105	81349	RCR07G102J
R	9	RES COMP 1.0 K 5PCT 1/4W	6099-2105	81349	RCR07G102J
R	10	RES COMP 2.4 K OHM 5PCT 1/4W	6099-2245	81349	RCR07G242J
R	11	RES COMP 51 OHM 5PCT 1/4W	6099-0515	81349	RCR07G510J
R	12	RES COMP 15 K 5PCT 1/4W	6099-3155	81349	RCR07G153J
R	14	RES COMP 20 K OHM 5PCT 1/4W	6099-3205	81349	RCR07G203J
R	15	RES COMP 3.0 K OHM 5PCT 1/4W	6099-2305	81349	RCR07G302J
R	16	RES COMP 5.6 K 5PCT 1/4W	6099-2565	81349	RCR07G562J
R	17	RES COMP 10 K 5PCT 1/4W	6099-3105	81349	RCR07G103J
R	18	RES COMP 100 OHM 5PCT 1/4W	6099-1105	81349	RCR07G101J
R	19	RES COMP 5.6 K 5PCT 1/4W	6099-2565	81349	RCR07G562J

File Courtesy of GRWiki.org

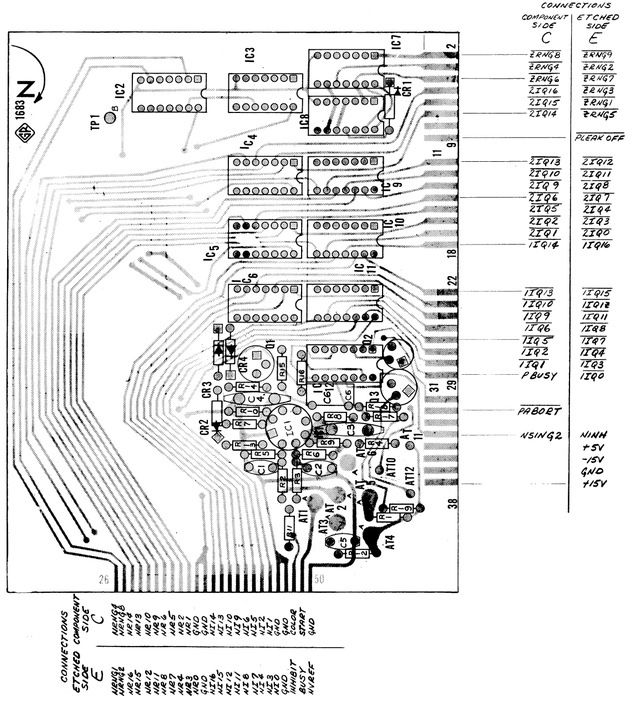

NOTE: *Orientation:* **Viewed from parts side.** *Part number:* **Refer to caption.**
Symbolism: **Outlined area = part; black ckt pattern (if any) = parts side**

Data output (P/N 1683-4703/-4704) etched-circuit board layout.

NOTES:

CONNECTIONS FOR VARIOUS TYPES OF OPERATION

1. DC-COUPLED "START" SIGNAL (PIN 49)

   A. SIGNAL MUST BE PRESENT FOR 20 μs OR LONGER, MAXIMUM OF ±50 V.

   B. FOR START TO OCCUR ON POSITIVE-GOING TRANSITION, CONNECT ANCHOR TERMINAL (AT1) 2 to AT1.

   FOR TRIGGER LEVEL OF:

   +5 V CONNECT AT3 TO AT4
   +1.5 V CONNECT AT3 TO AT5
   −5 V CONNECT AT3 TO AT6

   C. FOR START TO OCCUR ON NEGATIVE-GOING TRANSITION, CONNECT AT3 TO AT1.

   FOR TRIGGER LEVELS OF:

   +5 V CONNECT AT2 TO AT4
   +1.5 V CONNECT AT2 TO AT5
   −5 V CONNECT AT2 TO AT6

2. AC-COUPLED START SIGNAL (PIN 49)

   A. SIGNAL MUST BE GREATER THAN 8 V PEAK AND PRESENT FOR 20 μs OR LONGER.

   B. FOR START TO OCCUR ON POSITIVE-GOING TRANSITION, CONNECT AT3 TO AT4 AND AT2 TO AT1.

   C. FOR START TO OCCUR ON NEGATIVE-GOING TRANSITION, CONNECT AT2 TO AT6 AND AT3 TO AT1.

3. INHIBIT SIGNAL (PIN 23)

   THE INHIBIT SIGNAL INPUT IS COMPATIBLE WITH THE TYPE OF BOARD OBTAINED; HIGH-LEVEL OR LOW-LEVEL DATA. FOR HIGH-LEVEL DATA, R13 IS SUPPLIED WITH THE BOARD. FOR LOW-LEVEL DATA R13 IS REMOVED AND R12, THE SAME VALUE RESISTOR, IS SUPPLIED WITH THE BOARD. THE LEVELS FOR THE INHIBIT SIGNAL CAN BE CHANGED BY INTERCHANGING R12 AND R13.

   FOR OPERATION WITH THE GR TYPE 1137 DATA PRINTER, USE R13 (REMOVE R12).
   FOR STANDARD T^2L LEVEL, USE R12 (REMOVE R13).

4. INTERCHANGING LOGIC LEVELS

   IC'S ENCLOSED BY DASHED LINES ARE IN SOCKETS AND CAN BE INTERCHANGED FOR DIFFERENT LOGIC LEVELS (STANDARD T^2L 0-5 V OR 0-15 V).

   FOR 5-V LEVEL, CONNECT AT10 TO AT11.
   FOR +15-V LEVEL, CONNECT AT10 TO AT12.

   THE APPLICABLE CONNECTION IS MADE ON THE BOARD SUPPLIED TO THE USER AND CAN BE CONNECTED TO THE OTHER ANCHOR TERMINAL IF IT IS DESIRED TO CHANGE LEVELS.

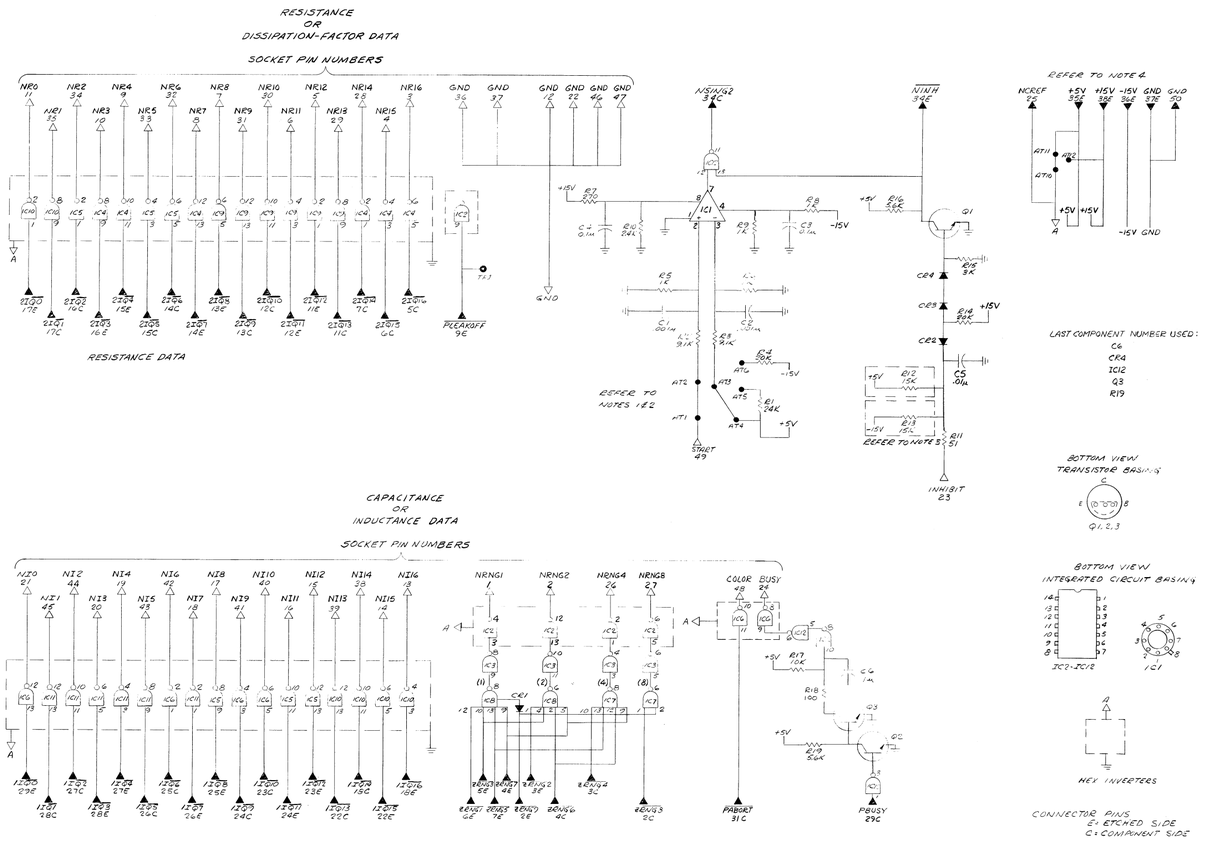

Figure 6-17. Data Output board schematic, N.

RESISTANCE IS IN OHMS; $K=10^3$, $M=10^6$
CAPACITANCE IS IN FARADS; $\mu=10^{-6}$, $p=10^{-12}$
VOLTAGES EXPLAINED IN INSTRUCTION BOOK SERVICE NOTES
PANEL CONTROL; REAR CONTROL
S=SCREWDRIVER CONTROL, WT=WIRE TIE, TP=TEST POINT
COMPLETE REFERENCE DESIGNATION INCLUDES SUBASSEMBLY LETTER, C-M, B-M, ETC.

4 0 4 F SWITCH NUMBERING
FRONT, REAR
CONTACTS, FIRST CONTACT CW FROM STRUT SCREW ABOVE KEY IS 01
SECTION, SECTION NEAREST PANEL IS 1
ROTORS SHOWN CCW

CONNECTIONS
OUTPUT LEAVES SUBASSEMBLY
INPUT FROM DIFFERENT SUBASSEMBLY
OUTPUT REMAINS ON SUBASSEMBLY
INPUT FROM SAME SUBASSEMBLY

File Courtesy of GRWiki.org

ELECTRICAL PARTS LIST

PROGRAM PC BOARD P P/N 1683-4770

REFDES		DESCRIPTION	PART NO.	FMC	MFGR PART NUMBER
C	1	CAP TANT 22 UF 20PCT 15V	4450-5300	56289	150D226X0015B2
C	2	CAP CER MONO 2.2UF 20PCT 50VSP	4400-2080	72982	8141-M050-651-225M
C	3	CAP TANT 33 UF 20PCT 10V	4450-5400	56289	150D336X0010B2
C	4	CAP CER DISC 180PF 10PCT 500V	4404-1188	72982	0831082Z5D00181J
C	5	CAP CER DISC.01UF 80/20PCT 500V	4406-3109	72982	0811082Z5U00103Z
C	6	CAP CER MONO 0.1UF 20PCT 50VSP	4400-2050	72982	8131-M050-651-104M
C	7	CAP CER DISC 1000PF 80/20PCT 500	4404-2109	72982	0831082Z5U00102Z
C	8	CAP CER DISC .02UF 80/20PCT 100V	4402-3200	56289	55C21 .02UF
C	9	CAP CER MONO 1UF 20PCT 50VSP	4400-2070	72982	8131-M050-651-105M
C	10	CAP CER DISC .02UF 80/20PCT 100V	4402-3200	56289	55C21 .02UF
C	11	CAP CER MONO 2.2UF 20PCT 50VSP	4400-2080	72982	8141-M050-651-225M
C	12	CAP CER DISC.01UF 80/20PCT 500V	4406-3109	72982	0811082Z5U00103Z
C	13	CAP CER DISC.01UF 80/20PCT 500V	4406-3109	72982	0811082Z5U00103Z
C	14	CAP CER DISC.01UF 80/20PCT 500V	4406-3109	72982	0811082Z5U00103Z
C	15	CAP TANT 6.8 UF 20PCT 35V	4450-5000	56289	150D685X0035B2
C	16	CAP CER MONO 2.2UF 20PCT 50VSP	4400-2080	72982	8141-M050-651-225M
C	17	CAP CER MONO 0.47UF 20PCT 50VSP	4400-2054	72982	8131M050651047 4M
C	18	CAP CER DISC .02UF 80/20PCT 100V	4402-3200	56289	55C21 .02UF
C	19	CAP CER MONO 1UF 20PCT 50VSP	4400-2070	72982	8131-M050-651-105M
C	20	CAP CER MONO 2.2UF 20PCT 50VSP	4400-2080	72982	8141-M050-651-225M
C	21	CAP CER MONO 1UF 20PCT 50VSP	4400-2070	72982	8131-M050-651-105M
C	22	CAP CER MONO 1UF 20PCT 50VSP	4400-2070	72982	8131-M050-651-105M
C	23	CAP CER MONO 1UF 20PCT 50VSP	4400-2070	72982	8131-M050-651-105M
CR	1	DIODE 1N4151 75PIV IR.10UA SI	6082-1001	14433	1N3604
CR	2	DIODE 1N4151 75PIV IR.10UA SI	6082-1001	14433	1N3604
CR	3	DIODE 1N4151 75PIV IR.10UA SI	6082-1001	14433	1N3604
CR	4	DIODE 1N4151 75PIV IR.10UA SI	6082-1001	14433	1N3604
CR	5	DIODE 1N4151 75PIV IR.10UA SI	6082-1001	14433	1N3604
CR	6	DIODE 1N4151 75PIV IR.10UA SI	6082-1001	14433	1N3604
CR	7	ZENER 1N750 4.7V 10PCT .4W	6083-1003	14433	1N750
CR	8	DIODE 1N4151 75PIV IR.10UA SI	6082-1001	14433	1N3604
CR	9	DIODE 1N4151 75PIV IR.10UA SI	6082-1001	14433	1N3604
CR	10	DIODE 1N4151 75PIV IR.10UA SI	6082-1001	14433	1N3604
CR	11	DIODE 1N4151 75PIV IR.10UA SI	6082-1001	14433	1N3604
CR	12	DIODE 1N4151 75PIV IR.10UA SI	6082-1001	14433	1N3604
CR	13	DIODE 1N4151 75PIV IR.10UA SI	6082-1001	14433	1N3604
CR	14	DIODE 1N4151 75PIV IR.10UA SI	6082-1001	14433	1N3604
CR	15	DIODE 1N4151 75PIV IR.10UA SI	6082-1001	14433	1N3604
CR	16	DIODE 1N4151 75PIV IR.10UA SI	6082-1001	14433	1N3604
CR	17	DIODE 1N995 15PIV IR 10UA GE	6082-1002	03877	1N995
CR	18	DIODE 1N995 15PIV IR 10UA GE	6082-1002	03877	1N995
CR	19	DIODE 1N995 15PIV IR 10UA GE	6082-1002	03877	1N995
CR	20	DIODE 1N995 15PIV IR 10UA GE	6082-1002	03877	1N995
CR	21	DIODE 1N995 15PIV IR 10UA GE	6082-1002	03877	1N995
CR	22	DIODE 1N995 15PIV IR 10UA GE	6082-1002	03877	1N995
CR	23	DIODE 1N995 15PIV IR 10UA GE	6082-1002	03877	1N995
CR	24	DIODE 1N995 15PIV IR 10UA GE	6082-1002	03877	1N995
CR	25	DIODE 1N995 15PIV IR 10UA GE	6082-1002	03877	1N995
DS	1	LAMP BI-PIN BASE 10V .04A 5000H	5600-1071	71744	CM7-7367
DS	2	LAMP BI-PIN BASE 10V .04A 5000H	5600-1071	71744	CM7-7367
DS	3	LAMP BI-PIN BASE 10V .04A 5000H	5600-1071	71744	CM7-7367
DS	4	LAMP BI-PIN BASE 10V .04A 5000H	5600-1071	71744	CM7-7367
DS	5	LAMP BI-PIN BASE 10V .04A 5000H	5600-1071	71744	CM7-7367
DS	6	LAMP BI-PIN BASE 10V .04A 5000H	5600-1071	71744	CM7-7367
DS	7	LAMP BI-PIN BASE 10V .04A 5000H	5600-1071	71744	CM7-7367
DS	8	LAMP BI-PIN BASE 10V .04A 5000H	5600-1071	71744	CM7-7367
DS	9	LAMP BI-PIN BASE 10V .04A 5000H	5600-1071	71744	CM7-7367
DS	10	LAMP BI-PIN BASE 10V .04A 5000H	5600-1071	71744	CM7-7367
IC	1	ICD DTUL945 14D CLK FLIFLD	5431-9452	01295	SN15845N
IC	2	ICD DTUL945 14D CLK FLIFLD	5431-9452	01295	SN15845N
IC	3	ICD DTUL945 14D CLK FLIFLD	5431-9452	01295	SN15845N
IC	4	ICD DTUL945 14D CLK FLIFLD	5431-9452	01295	SN15845N
IC	5	ICD DTUL945 14D CLK FLIFLD	5431-9452	01295	SN15845N
IC	6	ICD DTUL945 14D CLK FLIFLD	5431-9452	01295	SN15845N
IC	7	ICD DTUL945 14D CLK FLIFLD	5431-9452	01295	SN15845N
IC	8	ICD DTUL945 14D CLK FLIFLD	5431-9452	01295	SN15845N
IC	9	ICD DTUL946 14D GATE	5431-9462	01295	SN15846N
IC	10	ICD DTUL946 14D GATE	5431-9462	01295	SN15846N
IC	11	ICD DTUL944 14D POWER GATE	5431-9442	01295	SN15844N
IC	12	ICD DTUL936 14D INVERTER	5431-9362	01295	SN15836N

ELECTRICAL PARTS LIST (cont)

PROGRAM PC BOARD P P/N 1683-4770

REFDES		DESCRIPTION	PART NO.	FMC	MFGR PART NUMBER
IC	13	ICD DTUL944 14D POWER GATE	5431-9442	01295	SN15844N
IC	14	ICD DTUL946 14D GATE	5431-9462	01295	SN15846N
IC	15	ICD DTUL946 14D GATE	5431-9462	01295	SN15846N
IC	16	ICD DTUL944 14D POWER GATE	5431-9442	01295	SN15844N
IC	17	ICD DTUL946 14D GATE	5431-9462	01295	SN15846N
IC	18	ICD DTUL944 14D POWER GATE	5431-9442	01295	SN15844N
IC	19	ICD DTUL944 14D POWER GATE	5431-9442	01295	SN15844N
IC	20	ICD DTUL932 14D BUFF GATE	5431-9322	01295	SN15832N
IC	21	ICD DTUL932 14D BUFF GATE	5431-9322	01295	SN15832N
IC	22	ICD DTUL937 14D INVERTER	5431-9372	01295	SN15837N
IC	23	ICD DTUL946 14D GATE	5431-9462	01295	SN15846N
IC	24	ICD DTUL946 14D GATE	5431-9462	01295	SN15846N
IC	25	ICD DTUL946 14D GATE	5431-9462	01295	SN15846N
IC	26	ICD DTUL946 14D GATE	5431-9462	01295	SN15846N
IC	27	ICD DTUL930 14D GATE	5431-9302	01295	SN15830N
IC	28	ICD DTUL9099 14D D CLK JK FLIFLD	5431-9099	01295	SN158099N
IC	29	ICD DTUL946 14D GATE	5431-9462	01295	SN15846N
IC	30	ICD DTUL936 14D INVERTER	5431-9362	01295	SN15836N
Q	1	TRANSISTOR 2N3646	8210-1119	07263	2N3646
Q	2	TRANSISTOR 2N3414	8210-1047	03508	2N3414
Q	3	TRANSISTOR 2N4125	8210-1125	04713	2N4125
Q	4	TRANSISTOR 2N3391A	8210-1092	03508	2N3391A
Q	5	TRANSISTOR 2N3391A	8210-1092	03508	2N3391A
Q	6	TRANSISTOR 2N4125	8210-1125	04713	2N4125
Q	7	TRANSISTOR 2N3646	8210-1119	07263	2N3646
Q	8	TRANSISTOR 2N3414	8210-1047	03508	2N3414
Q	9	TRANSISTOR 2N3646	8210-1119	07263	2N3646
Q	10	TRANSISTOR 2N3414	8210-1047	03508	2N3414
Q	11	TRANSISTOR 2N3414	8210-1047	03508	2N3414
Q	12	TRANSISTOR 2N3414	8210-1047	03508	2N3414
Q	13	TRANSISTOR 2N3414	8210-1047	03508	2N3414
Q	14	TRANSISTOR 2N3414	8210-1047	03508	2N3414
Q	15	TRANSISTOR 2N4125	8210-1125	04713	2N4125
Q	16	TRANSISTOR 2N3414	8210-1047	03508	2N3414
Q	17	TRANSISTOR 2N3414	8210-1047	03508	2N3414
Q	18	TRANSISTOR 2N4125	8210-1125	04713	2N4125
Q	19	TRANSISTOR 2N4125	8210-1125	04713	2N4125
Q	20	TRANSISTOR 2N3414	8210-1047	03508	2N3414
Q	21	TRANSISTOR 2N3414	8210-1047	03508	2N3414
R	3	RES COMP 560 OHM 5PCT 1/4W	6099-1565	81349	RCR07G561J
R	4	RES COMP 1.5 K 5PCT 1/4W	6099-2155	81349	RCR07G152J
R	5	RES COMP 7.5 K OHM 5PCT 1/4W	6099-2755	81349	RCR07G752J
R	6	RES COMP 560 OHM 5PCT 1/4W	6099-1565	81349	RCR07G561J
R	7	RES COMP 1.0 K 5PCT 1/4W	6099-2105	81349	RCR07G102J
R	8	RES COMP 75 OHM 5PCT 1/4W	6099-0755	81349	RCR07G750J
R	9	RES COMP 15 K 5PCT 1/4W	6099-3155	81349	RCR07G153J
R	10	RES COMP 1.0 K 5PCT 1/4W	6099-2105	81349	RCR07G102J
R	11	RES COMP 7.5 K OHM 5PCT 1/4W	6099-2755	81349	RCR07G752J
R	12	RES COMP 10 K 5PCT 1/4W	6099-3105	81349	RCR07G103J
R	13	RES COMP 10 OHM 5PCT 1/4W	6099-0105	81349	RCR07G100J
R	14	RES COMP 20 K OHM 5PCT 1/4W	6099-3205	81349	RCR07G203J
R	15	RES COMP 5.1 K OHM 5PCT 1/4W	6099-2515	81349	RCR07G512J
R	16	RES COMP 3.0 K OHM 5PCT 1/4W	6099-2305	81349	RCR07G302J
R	17	RES COMP 1.0 K 5PCT 1/4W	6099-2105	81349	RCR07G102J
R	18	RES COMP 1.0 K 5PCT 1/4W	6099-2105	81349	RCR07G102J
R	19	RES COMP 5.1 K OHM 5PCT 1/4W	6099-2515	81349	RCR07G512J
R	20	RES COMP 1.0 K 5PCT 1/4W	6099-2105	81349	RCR07G102J
R	21	RES COMP 560 OHM 5PCT 1/4W	6099-1565	81349	RCR07G561J
R	22	RES COMP 1.0 K 5PCT 1/4W	6099-2155	81349	RCR07G102J
R	23	RES COMP 3.9 K 5PCT 1/4W	6099-2395	81349	RCR07G392J
R	24	RES COMP 16 K OHM 5PCT 1/4W	6099-3165	81349	RCR07G163J
R	25	RES COMP 240 OHM 5PCT 1/4W	6099-1245	81349	RCR07G241J
R	26	RES COMP 270 K 5PCT 1/4W	6099-4275	81349	RCR07G274J
R	27	RES COMP 1.0 K 5PCT 1/4W	6099-2105	81349	RCR07G102J
R	28	RES COMP 5.6 K 5PCT 1/4W	6099-2565	81349	RCR07G562J
R	29	RES COMP 51 K OHM 5PCT 1/4W	6099-3515	81349	RCR07G513J
R	30	RES COMP 5.6 K 5PCT 1/4W	6099-2565	81349	RCR07G562J
R	31	RES COMP 3.9 K 5PCT 1/4W	6099-2395	81349	RCR07G392J
R	32	RES COMP 16 K OHM 5PCT 1/4W	6099-3165	81349	RCR07G163J
R	33	RES COMP 1.0 K 5PCT 1/4W	6099-2105	81349	RCR07G102J
R	34	RES COMP 2.0 K OHM 5PCT 1/4W	6099-2205	81349	RCR07G202J

ELECTRICAL PARTS LIST (cont)

PROGRAM PC BOARD P P/N 1683-4770

REFDES		DESCRIPTION	PART NO.	FMC	MFGR PART NUMBER
R	35	RES COMP 12 K 5PCT 1/4W	6099-3125	81349	RCR07G123J
R	36	RES COMP 9.1 K OHM 5PCT 1/4W	6099-2915	81349	RCR07G912J
R	37	RES COMP 6.2 K OHM 5PCT 1/4W	6099-2625	81349	RCR07G622J
R	38	RES COMP 7.5 K OHM 5PCT 1/4W	6099-2755	81349	RCR07G752J
R	39	RES COMP 51 K OHM 5PCT 1/4W	6099-3515	81349	RCR07G513J
R	40	RES COMP 5.6 K 5PCT 1/4W	6099-2565	81349	RCR07G562J
R	41	RES COMP 5.6 K 5PCT 1/4W	6099-2565	81349	RCR07G562J
R	42	RES COMP 5.6 K 5PCT 1/4W	6099-2565	81349	RCR07G562J
R	43	RES COMP 5.6 K 5PCT 1/4W	6099-2565	81349	RCR07G562J
R	44	RES COMP 5.6 K 5PCT 1/4W	6099-2565	81349	RCR07G562J
R	45	RES COMP 5.6 K 5PCT 1/4W	6099-2565	81349	RCR07G562J
R	46	RES COMP 5.6 K 5PCT 1/4W	6099-2565	81349	RCR07G562J
R	47	RES COMP 3.0 K OHM 5PCT 1/4W	6099-2305	81349	RCR07G302J
R	48	RES COMP 100 OHM 5PCT 1/4W	6099-1105	81349	RCR07G101J
R	49	RES COMP 30 OHM 5PCT 1/4W	6099-0305	81349	RCR07G300J
R	50	RES COMP 3.9 K 5PCT 1/4W	6099-2395	81349	RCR07G392J
R	51	RES COMP 16 K OHM 5PCT 1/4W	6099-3165	81349	RCR07G163J
R	52	RES COMP 1.0 K 5PCT 1/4W	6099-2105	81349	RCR07G102J
R	55	RES COMP 3.0 K OHM 5PCT 1/4W	6099-2305	81349	RCR07G302J
R	56	RES COMP 3.0 K OHM 5PCT 1/4W	6099-2305	81349	RCR07G302J
R	57	RES COMP 6.8 K 5PCT 1/4W	6099-2685	81349	RCR07G682J
R	58	RES COMP 6.8 K 5PCT 1/4W	6099-2685	81349	RCR07G682J
R	59	RES COMP 20 OHM 5PCT 1/2W	6100-0205	81349	RCR20G200J

File Courtesy of GRWiki.org

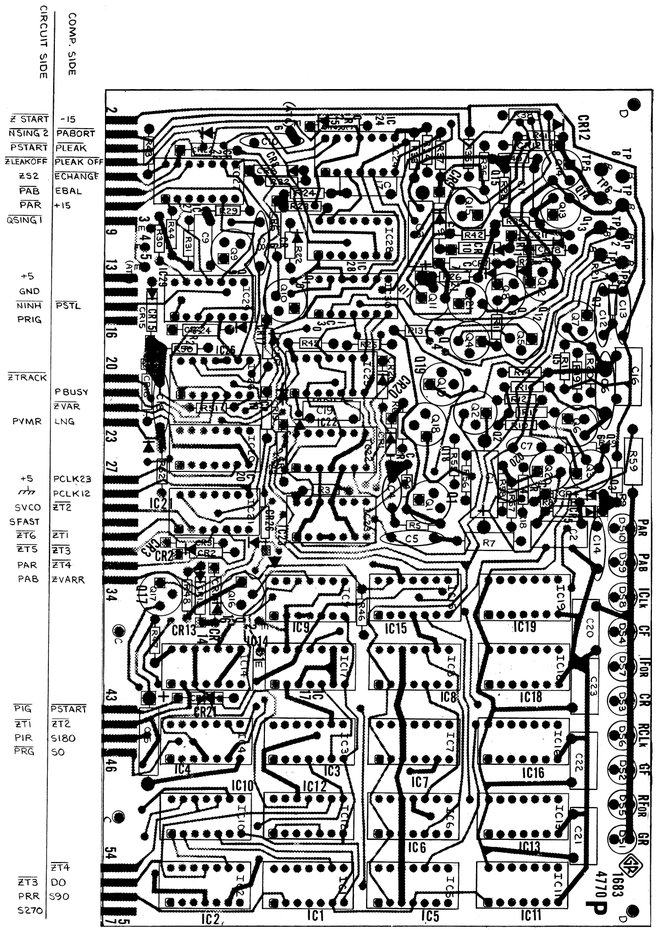

NOTE: *Orientation*: Viewed from parts side. *Part number:* Refer to caption. *Symbolism:* Outlined area = part; gray ckt pattern (if any) = parts side, black = other side. *Pins:* Square pad in ckt pattern = collector, I-C pin 1, cathode (of diode), or + end (of capacitor).

Program (P/N 1683-4770) etched-circuit board layout.

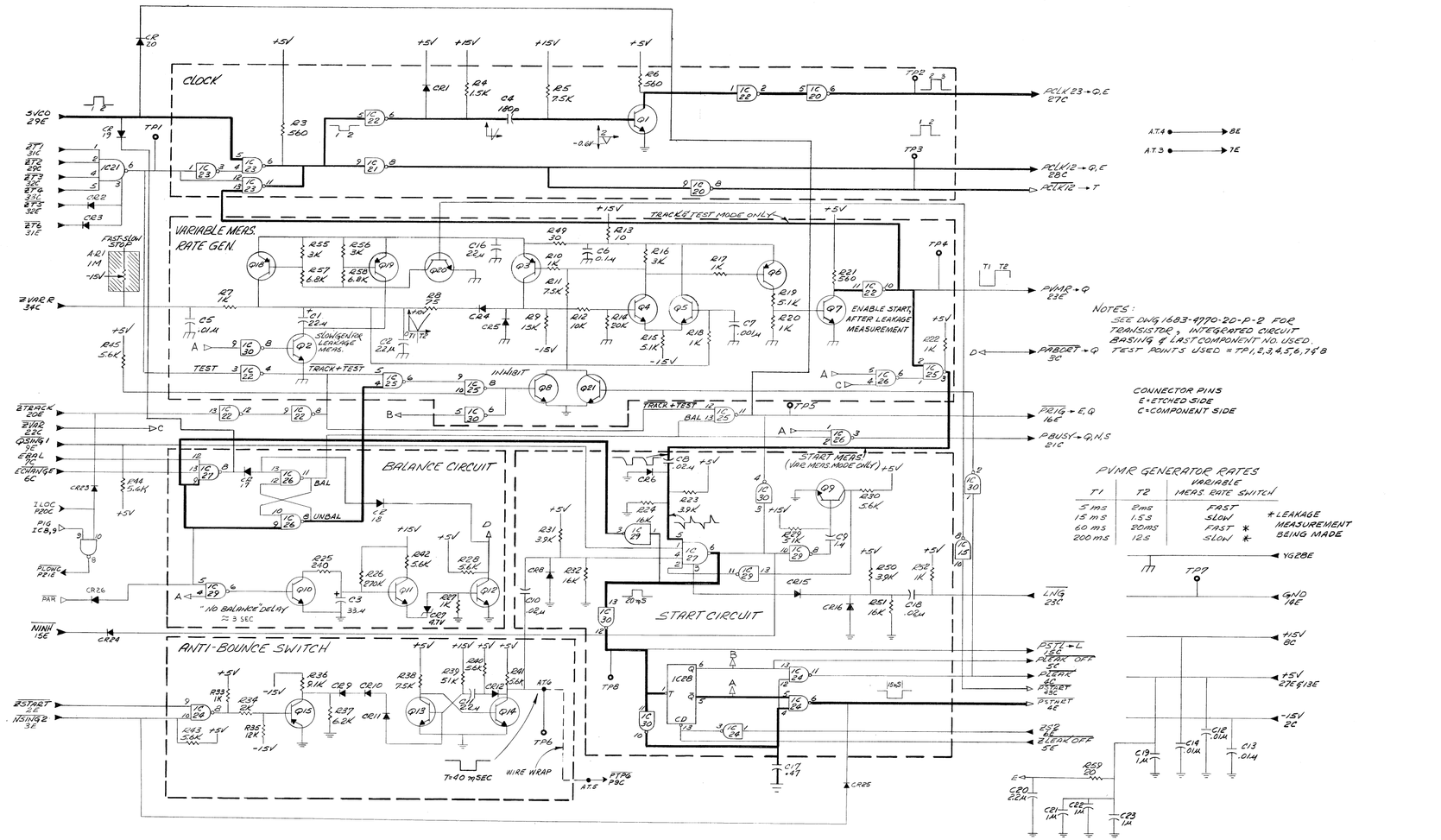

Figure 6-18. Program board schematic (sheet 1 of 2), P.

RESISTANCE IS IN OHMS, K=10^3, M=10^6
CAPACITANCE IS IN FARADS, p=10^{-12}, n=10^{-9}, u=10^{-6}
VOLTAGES EXPLAINED IN INSTRUCTION BOOK SERVICE NOTES
←→ = PANEL CONTROL, ←-→ = REAR CONTROL
⊕ = SCREWDRIVER CONTROL, WT = WIRE TIE, TP = TEST POINT
COMPLETE REFERENCE DESIGNATION INCLUDES SUBASSEMBLY LETTER, C-R1, B-R1, ETC.

4 0 4 F SWITCH NUMBERING
FRONT, REAR
NUMBER 1 = FIRST CONTACT CW FROM STRUT SCREW ABOVE KEY 1S OF SECTION. SECTION NEAREST PANEL IS 1.

CONNECTIONS
OUTPUT LEAVES SUBASSEMBLY
INPUT FROM DIFFERENT SUBASSEMBLY
OUTPUT REMAINS ON SUBASSEMBLY
INPUT FROM SAME SUBASSEMBLY

File Courtesy of GRWiki.org

File Courtesy of GRWiki.org

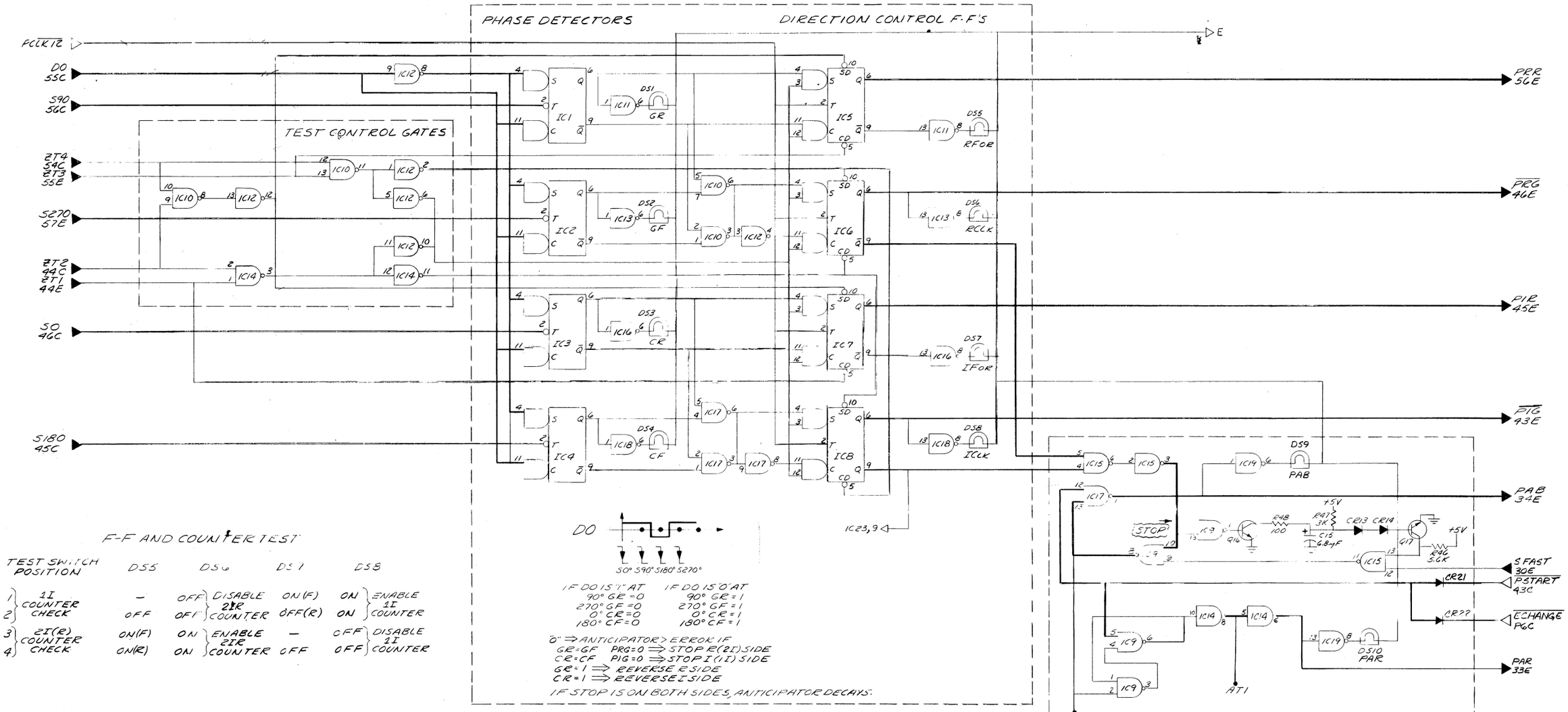

NOTE

Signal DO must be low to initiate a decay cycle.

Figure 6-19. Program board schematic (sheet 2 of 2), P.

File Courtesy of GRWiki.org

ELECTRICAL PARTS LIST

AUXILIARY PC BOARD Q P/N 1683-4709

REFDES		DESCRIPTION	PART NO.	FMC	MFGR PART NUMBER
C	1	CAP CER SQ .10UF 80/20PCT 100V	4403-4100	72982	8131M100651104Z
C	2	CAP CER SQ .10UF 80/20PCT 100V	4403-4100	72982	8131M100651104Z
C	3	CAP CER DISC .01UF 80/20PCT 100V	4401-3100	72982	0805540Z5U00103Z
C	4	CAP CER DISC .01UF 80/20PCT 100V	4401-3100	72982	0805540Z5U00103Z
C	5	CAP CER DISC .01UF 80/20PCT 100V	4401-3100	72982	0805540Z5U00103Z
C	6	CAP CER DISC .01UF 80/20PCT 100V	4401-3100	72982	0805540Z5U00103Z
C	7	CAP CER DISC .01UF 80/20PCT 100V	4401-3100	72982	0805540Z5U00103Z
C	8	CAP CER DISC .01UF 80/20PCT 100V	4401-3100	72982	0805540Z5U00103Z
C	9	CAP CER DISC .01UF 80/20PCT 100V	4401-3100	72982	0805540Z5U00103Z
C	10	CAP CER DISC .01UF 80/20PCT 100V	4401-3100	72982	0805540Z5U00103Z
C	11	CAP CER DISC .01UF 80/20PCT 100V	4401-3100	72982	0805540Z5U00103Z
C	12	CAP CER DISC .01UF 80/20PCT 100V	4401-3100	72982	0805540Z5U00103Z
C	13	CAP CER DISC .01UF 80/20PCT 100V	4401-3100	72982	0805540Z5U00103Z
C	14	CAP CER DISC .01UF 80/20PCT 100V	4401-3100	72982	0805540Z5U00103Z
C	15	CAP CER DISC .01UF 80/20PCT 100V	4401-3100	72982	0805540Z5U00103Z
C	16	CAP CER DISC .01UF 80/20PCT 100V	4401-3100	72982	0805540Z5U00103Z
C	17	CAP CER DISC .01UF 80/20PCT 100V	4401-3100	72982	0805540Z5U00103Z
C	18	CAP CER DISC .01UF 80/20PCT 100V	4401-3100	72982	0805540Z5U00103Z
C	19	CAP CER DISC .01UF 80/20PCT 100V	4401-3100	72982	0805540Z5U00103Z
C	20	CAP CER DISC .01UF 80/20PCT 100V	4401-3100	72982	0805540Z5U00103Z
C	21	CAP CER DISC .01UF 80/20PCT 100V	4401-3100	72982	0805540Z5U00103Z
C	22	CAP CER DISC .01UF 80/20PCT 100V	4401-3100	72982	0805540Z5U00103Z
C	23	CAP CER DISC .01UF 80/20PCT 100V	4401-3100	72982	0805540Z5U00103Z
C	24	CAP CER DISC .01UF 80/20PCT 100V	4401-3100	72982	0805540Z5U00103Z
C	25	CAP CER DISC .01UF 80/20PCT 100V	4401-3100	72982	0805540Z5U00103Z
C	26	CAP CER DISC .01UF 80/20PCT 100V	4401-3100	72982	0805540Z5U00103Z
C	27	CAP CER DISC .01UF 80/20PCT 100V	4401-3100	72982	0805540Z5U00103Z
C	28	CAP CER DISC .01UF 80/20PCT 100V	4401-3100	72982	0805540Z5U00103Z
C	29	CAP CER DISC .01UF 80/20PCT 100V	4401-3100	72982	0805540Z5U00103Z
C	30	CAP CER SQ .10UF 80/20PCT 100V	4403-4100	72982	8131M100651104Z
C	31	CAP CER DISC .01UF 80/20PCT 100V	4401-3100	72982	0805540Z5U00103Z
IC	1	ICD DTUL946 14D GATE	5431-9462	01295	SN15846N
IC	2	ICD DTUL936 14D INVERTER	5431-9362	01295	SN15836N
IC	3	ICD DTUL946 14D GATE	5431-9462	01295	SN15846N
IC	4	ICD DTUL936 14D INVERTER	5431-9362	01295	SN15836N
IC	5	ICD DTUL946 14D GATE	5431-9462	01295	SN15846N
IC	6	ICD DTUL936 14D INVERTER	5431-9362	01295	SN15836N
IC	7	ICD DTUL946 14D GATE	5431-9462	01295	SN15846N
IC	8	ICD DTUL936 14D INVERTER	5431-9362	01295	SN15836N
IC	9	ICD DTUL946 14D GATE	5431-9462	01295	SN15846N
IC	10	ICD DTUL936 14D INVERTER	5431-9362	01295	SN15836N
IC	11	ICD DTUL946 14D GATE	5431-9462	01295	SN15846N
IC	12	ICD DTUL936 14D INVERTER	5431-9362	01295	SN15836N
IC	13	ICD DTUL936 14D INVERTER	5431-9362	01295	SN15836N
IC	14	ICD DTUL945 14D CLK FLIFLO	5431-9452	01295	SN15845N
R	1	RES COMP 5.6 K 5PCT 1/4W	6099-2565	81349	RCR07G562J
R	2	RES COMP 5.6 K 5PCT 1/4W	6099-2565	81349	RCR07G562J
R	3	RES COMP 5.6 K 5PCT 1/4W	6099-2565	81349	RCR07G562J
R	4	RES COMP 5.6 K 5PCT 1/4W	6099-2565	81349	RCR07G562J
R	5	RES COMP 5.6 K 5PCT 1/4W	6099-2565	81349	RCR07G562J
R	6	RES COMP 5.6 K 5PCT 1/4W	6099-2565	81349	RCR07G562J
R	7	RES COMP 5.6 K 5PCT 1/4W	6099-2565	81349	RCR07G562J
R	8	RES COMP 5.6 K 5PCT 1/4W	6099-2565	81349	RCR07G562J
R	9	RES COMP 5.6 K 5PCT 1/4W	6099-2565	81349	RCR07G562J
R	10	RES COMP 5.6 K 5PCT 1/4W	6099-2565	81349	RCR07G562J
R	11	RES COMP 5.6 K 5PCT 1/4W	6099-2565	81349	RCR07G562J
R	12	RES COMP 5.6 K 5PCT 1/4W	6099-2565	81349	RCR07G562J
R	13	RES COMP 5.6 K 5PCT 1/4W	6099-2565	81349	RCR07G562J
R	14	RES COMP 5.6 K 5PCT 1/4W	6099-2565	81349	RCR07G562J
R	15	RES COMP 5.6 K 5PCT 1/4W	6099-2565	81349	RCR07G562J
R	16	RES COMP 5.6 K 5PCT 1/4W	6099-2565	81349	RCR07G562J
R	17	RES COMP 5.6 K 5PCT 1/4W	6099-2565	81349	RCR07G562J
R	18	RES COMP 5.6 K 5PCT 1/4W	6099-2565	81349	RCR07G562J
R	19	RES COMP 5.6 K 5PCT 1/4W	6099-2565	81349	RCR07G562J
R	20	RES COMP 5.6 K 5PCT 1/4W	6099-2565	81349	RCR07G562J
R	21	RES COMP 5.6 K 5PCT 1/4W	6099-2565	81349	RCR07G562J
R	22	RES COMP 5.6 K 5PCT 1/4W	6099-2565	81349	RCR07G562J
R	23	RES COMP 5.6 K 5PCT 1/4W	6099-2565	81349	RCR07G562J
R	24	RES COMP 5.6 K 5PCT 1/4W	6099-2565	81349	RCR07G562J
R	25	RES COMP 5.6 K 5PCT 1/4W	6099-2565	81349	RCR07G562J
R	26	RES COMP 5.6 K 5PCT 1/4W	6099-2565	81349	RCR07G562J

ELECTRICAL PARTS LIST (cont)

AUXILIARY PC BOARD Q P/N 1683-4709

REFDES		DESCRIPTION	PART NO.	FMC	MFGR PART NUMBER
R	27	RES COMP 330 OHM 5PCT 1/4W	6099-1335	81349	RCR07G331J
R	28	RES COMP 5.6 K 5PCT 1/4W	6099-2565	81349	RCR07G562J
R	29	RES COMP 82 OHM 5PCT 1/4W	6099-0825	81349	RCR07G820J
R	30	RES COMP 150 OHM 5PCT 1/4W	6099-1155	81349	RCR07G151J
R	31	RES COMP 51 OHM 5PCT 1/4W	6099-0515	81349	RCR07G510J
R	32	RES COMP 51 OHM 5PCT 1/4W	6099-0515	81349	RCR07G510J
R	33	RES COMP 51 OHM 5PCT 1/4W	6099-0515	81349	RCR07G510J
R	34	RES COMP 51 OHM 5PCT 1/4W	6099-0515	81349	RCR07G510J
R	35	RES COMP 51 OHM 5PCT 1/4W	6099-0515	81349	RCR07G510J
R	36	RES COMP 51 OHM 5PCT 1/4W	6099-0515	81349	RCR07G510J
R	37	RES COMP 51 OHM 5PCT 1/4W	6099-0515	81349	RCR07G510J
R	38	RES COMP 51 OHM 5PCT 1/4W	6099-0515	81349	RCR07G510J
R	39	RES COMP 51 OHM 5PCT 1/4W	6099-0515	81349	RCR07G510J
R	40	RES COMP 51 OHM 5PCT 1/4W	6099-0515	81349	RCR07G510J
R	41	RES COMP 51 OHM 5PCT 1/4W	6099-0515	81349	RCR07G510J
R	42	RES COMP 51 OHM 5PCT 1/4W	6099-0515	81349	RCR07G510J
R	43	RES COMP 51 OHM 5PCT 1/4W	6099-0515	81349	RCR07G510J
R	44	RES COMP 51 OHM 5PCT 1/4W	6099-0515	81349	RCR07G510J
R	45	RES COMP 51 OHM 5PCT 1/4W	6099-0515	81349	RCR07G510J
R	46	RES COMP 51 OHM 5PCT 1/4W	6099-0515	81349	RCR07G510J
R	47	RES COMP 51 OHM 5PCT 1/4W	6099-0515	81349	RCR07G510J
R	48	RES COMP 51 OHM 5PCT 1/4W	6099-0515	81349	RCR07G510J
R	49	RES COMP 51 OHM 5PCT 1/4W	6099-0515	81349	RCR07G510J
R	50	RES COMP 51 OHM 5PCT 1/4W	6099-0515	81349	RCR07G510J
R	51	RES COMP 51 OHM 5PCT 1/4W	6099-0515	81349	RCR07G510J
R	52	RES COMP 51 OHM 5PCT 1/4W	6099-0515	81349	RCR07G510J
R	53	RES COMP 51 OHM 5PCT 1/4W	6099-0515	81349	RCR07G510J
R	55	RES COMP 51 OHM 5PCT 1/4W	6099-0515	81349	RCR07G510J
R	56	RES COMP 51 OHM 5PCT 1/4W	6099-0515	81349	RCR07G510J
R	57	RES COMP 51 OHM 5PCT 1/4W	6099-0515	81349	RCR07G510J
R	58	RES COMP 51 OHM 5PCT 1/4W	6099-0515	81349	RCR07G510J
R	59	RES COMP 5.6 K 5PCT 1/4W	6099-2565	81349	RCR07G562J
R	60	RES COMP 470 OHM 5PCT 1/4W	6099-1475	81349	RCR07G471J
R	61	RES COMP 51 OHM 5PCT 1/4W	6099-0515	81349	RCR07G510J

File Courtesy of GRWiki.org

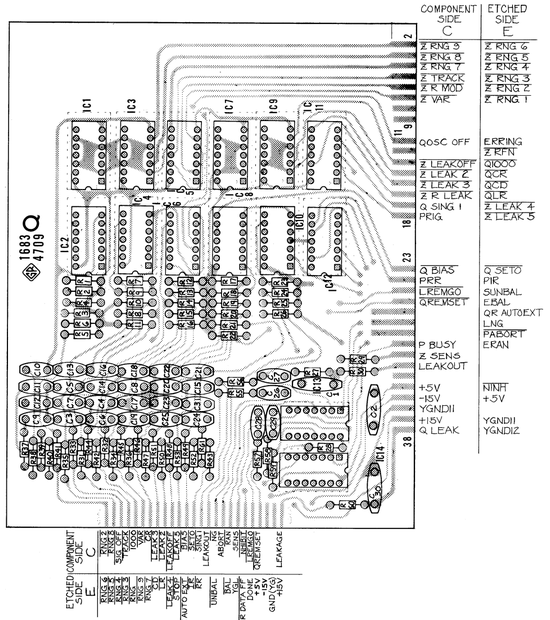

NOTE: *Orientation:* Viewed from parts side. *Part number:* Refer to caption. *Symbolism:* Wavy-line area = part; black ckt pattern (if any) = parts side, gray = other side. *Pins:* Square pad in ckt pattern = collector, I-C pin 1, cathode (of diode), or + end (of capacitor).

Auxiliary (P/N 1683-4709) etched-circuit board layout.

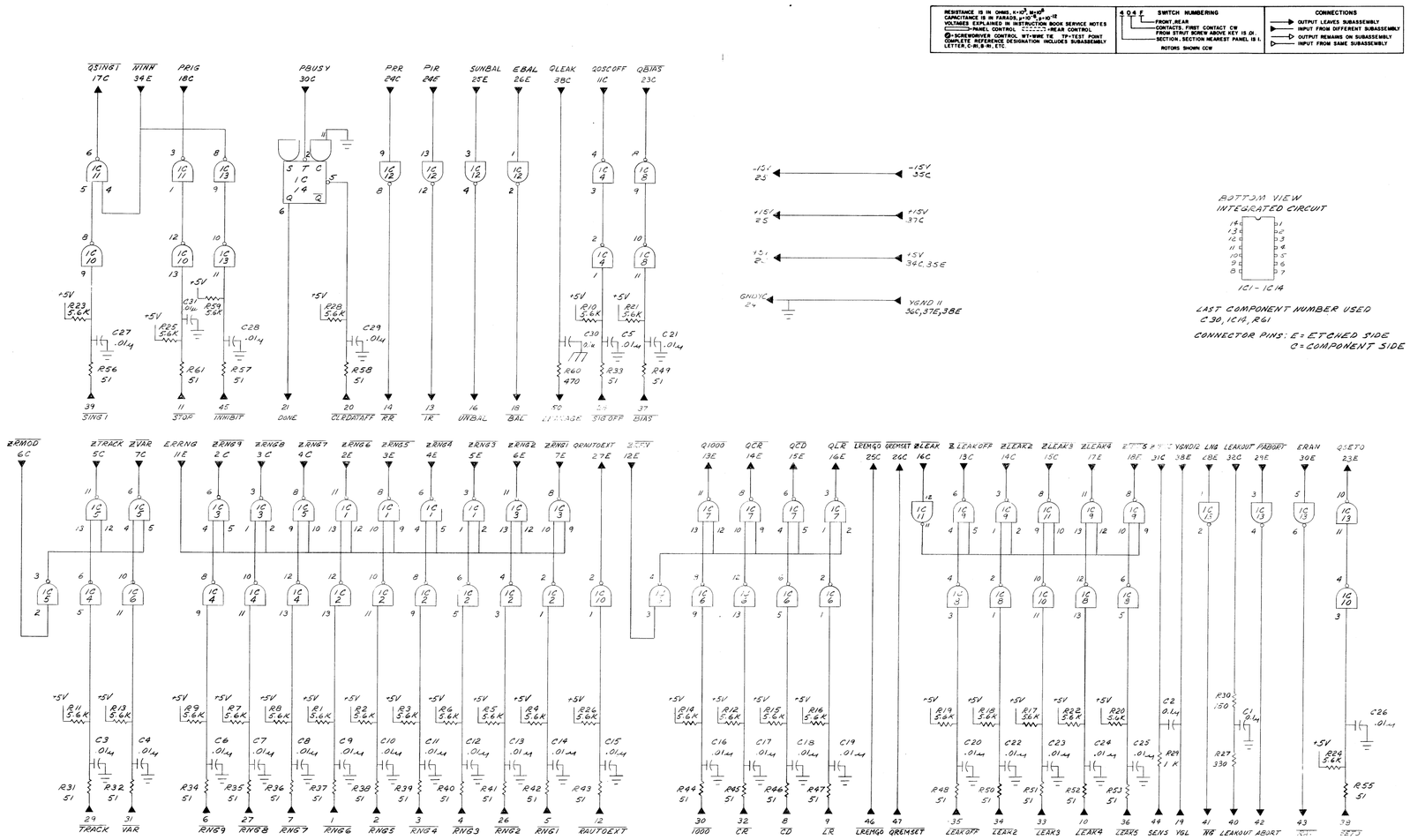

Figure 6-20. Auxiliary (Data Input) board schematic, Q.

File Courtesy of GRWiki.org

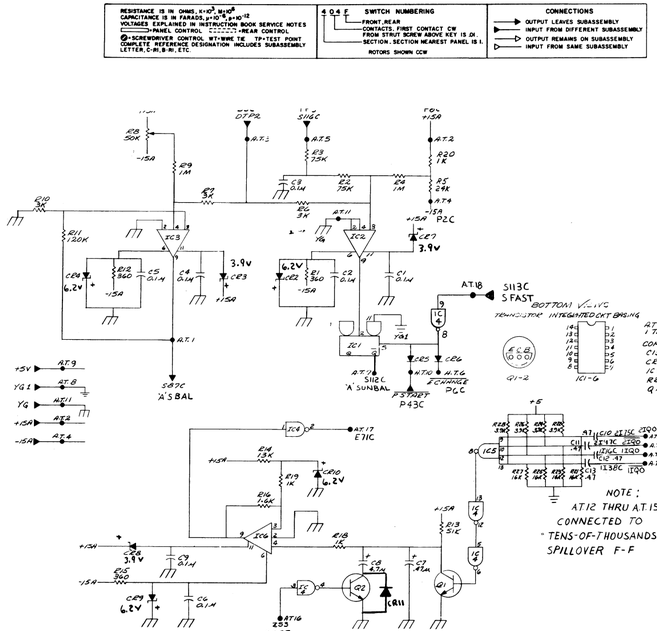

Figure 6-21. Auxiliary comparator board schematic, R.

NOTE

The R board also has a circuit that detects, via inputs from the spillover flip-flops on the counter boards, that the counters (1I and 2I) are at a 09999 count and are switching a 10000 count. When these states are detected, the board produces a signal that is sent to the E board main gates to momentarily turn of the counter clock's (ERCLK and EICKL) and prevent any transients from occurring at the K and B divider boards as the counters change states, thus preventing measurement errors. The ZS3 input to this circuit establishes the timing for a 1-kHz test frequency by switching out C8.

Auxiliary comparator (P/N 1683-4773) etched-circuit board layout.

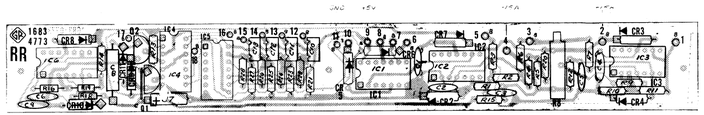

ELECTRICAL PARTS LIST

AUXILIARY COMPARTOR PC BOARD II RR P/N 1683-4773

REFDES		DESCRIPTION	PART NO.	FMC	MFGR PART NUMBER
C	1	CAP CER MONO 0.1UF 20PCT 50VGP	4400-2050	72982	8131-M050-651-104M
C	2	CAP CER MONO 0.1UF 20PCT 50VGP	4400-2050	72982	8131-M050-651-104M
C	3	CAP CER MONO 0.1UF 20PCT 50VGP	4400-2050	72982	8131-M050-651-104M
C	4	CAP CER MONO 0.1UF 20PCT 50VGP	4400-2050	72982	8131-M050-651-104M
C	5	CAP CER MONO 0.1UF 20PCT 50VGP	4400-2050	72982	8131-M050-651-104M
C	6	CAP CER MONO 0.1UF 20PCT 50VGP	4400-2050	72982	8131-M050-651-104M
C	7	CAP TANT .47 UF 20PCT 75V	4450-4310	56289	150D474X0075A2
C	8	CAP TANT 4.7 UF 20PCT 50V	4450-4990	56289	150D475X0050R2
C	9	CAP CER MONO 0.1UF 20PCT 50VGP	4400-2050	72982	8131-M050-651-104M
C	10	CAP CER MONO 0.47UF 20PCT 50VGP	4400-2054	72982	8131M050651047 4M
C	11	CAP CER MONO 0.47UF 20PCT 50VGP	4400-2054	72982	8131M050651047 4M
C	12	CAP CER MONO 0.47UF 20PCT 50VGP	4400-2054	72982	8131M050651047 4M
C	13	CAP CER MONO 0.47UF 20PCT 50VGP	4400-2054	72982	8131M050651047 4M
CR	2	ZENER 1N753A 6.2V 5PCT .4W	6083-1006	14433	1N753A
CR	3	ZENER 1N748A 3.9V 5PCT .4W	6083-1002	14433	1N748A
CR	4	ZENER 1N753A 6.2V 5PCT .4W	6083-1006	14433	1N753A
CR	5	DIODE 1N995 15PIV IR 10UA GE	6082-1002	03877	1N995
CR	6	DIODE 1N995 15PIV IR 10UA GE	6082-1002	03877	1N995
CR	7	ZENER 1N748A 3.9V 5PCT .4W	6083-1002	14433	1N748A
CR	8	ZENER 1N748A 3.9V 5PCT .4W	6083-1002	14433	1N748A
CR	9	ZENER 1N753A 6.2V 5PCT .4W	6083-1006	14433	1N753A
CR	10	ZENER 1N753A 6.2V 5PCT .4W	6083-1006	14433	1N753A
CR	11	DIODE 1N4151 75PIV IR.1UA SI	6082-1001	14433	1N3604
IC	1	ICD DTUL945 14D CLK FLIFLO	5431-9452	01295	SN15845N
IC	2	IC LINEAR VA710C	5432-7102	04713	MC1710CP
IC	3	IC LINEAR VA710C	5432-7102	04713	MC1710CP
IC	4	ICD DTUL937 14D INVERTER	5431-9372	01295	SN15837N
IC	5	ICD DTUL932 14D BUFF GATE	5431-9322	01295	SN15832N
IC	6	IC LINEAR VA710C	5432-7102	04713	MC1710CP
Q	1	TRANSISTOR 2N3414	8210-1047	03508	2N3414
Q	2	TRANSISTOR 2N3414	8210-1047	03508	2N3414
R	1	RES COMP 360 OHM 5PCT 1/4W	6099-1365	81349	RCR07G361J
R	2	RES COMP 75 K OHM 5PCT 1/4W	6099-3755	81349	RCR07G753J
R	3	RES COMP 75 K OHM 5PCT 1/4W	6099-3755	81349	RCR07G753J
R	4	RES COMP 1.0 M 5PCT 1/4W	6099-5105	81349	RCR07G105J
R	5	RES COMP 24 K OHM 5PCT 1/4W	6099-3245	81349	RCR07G243J
R	6	RES COMP 3.0 K OHM 5PCT 1/4W	6099-2305	81349	RCR07G302J
R	7	RES COMP 3.0 K OHM 5PCT 1/4W	6099-2305	81349	RCR07G302J
R	8	POT CERM TRM 50K OHM 10 PCT 15T	6049-0191	80294	3006P-1-503
R	9	RES COMP 1.0 M 5PCT 1/4W	6099-5105	81349	RCR07G105J
R	10	RES COMP 3.0 K OHM 5PCT 1/4W	6099-2305	81349	RCR07G302J
R	11	RES COMP 120 K 5PCT 1/4W	6099-4125	81349	RCR07G124J
R	12	RES COMP 360 OHM 5PCT 1/4W	6099-1365	81349	RCR07G361J
R	13	RES COMP 51 K OHM 5PCT 1/4W	6099-3515	81349	RCR07G513J
R	14	RES COMP 13 K OHM 5PCT 1/4W	6099-3135	81349	RCR07G133J
R	15	RES COMP 360 OHM 5PCT 1/4W	6099-1365	81349	RCR07G361J
R	16	RES COMP 1.6 K OHM 5PCT 1/4W	6099-2165	81349	RCR07G162J
R	18	RES COMP 1.0 K 5PCT 1/4W	6099-2105	81349	RCR07G102J
R	19	RES COMP 1.0 K 5PCT 1/4W	6099-2105	81349	RCR07G102J
R	20	RES COMP 1.0 K 5PCT 1/4W	6099-2105	81349	RCR07G102J
R	21	RES COMP 16 K OHM 5PCT 1/4W	6099-3165	81349	RCR07G163J
R	22	RES COMP 3.9 K 5PCT 1/4W	6099-2395	81349	RCR07G392J
R	23	RES COMP 16 K OHM 5PCT 1/4W	6099-3165	81349	RCR07G163J
R	24	RES COMP 3.9 K 5PCT 1/4W	6099-2395	81349	RCR07G392J
R	25	RES COMP 16 K OHM 5PCT 1/4W	6099-3165	81349	RCR07G163J
R	26	RES COMP 3.9 K 5PCT 1/4W	6099-2395	81349	RCR07G392J
R	27	RES COMP 16 K OHM 5PCT 1/4W	6099-3165	81349	RCR07G163J
R	28	RES COMP 3.9 K 5PCT 1/4W	6099-2395	81349	RCR07G392J

ELECTRICAL PARTS LIST

ANALOGIC PC BOARD S P/N 1683-4780

REFDES		DESCRIPTION	PART NO.	FMC	MFGR PART NUMBER
C	1	CAP TANT 15 UF 20PCT 20V	4450-5200	56289	150D156X0020B2
C	2	CAP CER DISC 39PF 10PCT 500V	4404-0398	72982	0831082Z5D00390K
C	3	CAP MYLAR .0682UF 1 PCT 100V	4860-7867	56289	410P .0682 UF 1PCT
C	4	CAP MYLAR .0093UF 2 PCT 100V	4860-7590	56289	410P .0093 UF 2PCT
C	5	CAP MYLAR .0682UF 1 PCT 100V	4860-7867	56289	410P .0682 UF 1PCT
C	6	CAP MYLAR .0093UF 2 PCT 100V	4860-7590	56289	410P .0093 UF 2PCT
C	7	CAP TANT 180 UF 20PCT 6V	4450-5617	56289	150D187X0006R2
C	8	CAP CER DISC .01UF 80/20PCT 100V	4401-3100	72982	0805540Z5U00103Z
C	9	CAP CER DISC .01UF 80/20PCT 100V	4401-3100	72982	0805540Z5U00103Z
C	10	CAP TANT 180 UF 20PCT 6V	4450-5617	56289	150D187X0006R2
C	11	CAP CER DISC .01UF 80/20PCT 100V	4401-3100	72982	0805540Z5U00103Z
C	12	CAP CER DISC .01UF 80/20PCT 100V	4401-3100	72982	0805540Z5U00103Z
C	13	CAP CER MONO 2.2UF 20PCT 50VGP	4400-2080	72982	8141-M050-651-225M
C	14	CAP TANT 1.0 UF 20PCT 35V	4450-4300	56289	150D105X0035A2
C	15	CAP TANT 6.8 UF 20PCT 35V	4450-5000	56289	150D685X0035B2
C	16	CAP CER MONO 2.2UF 20PCT 50VGP	4400-2080	72982	8141-M050-651-225M
C	17	CAP TANT 1.0 UF 20PCT 35V	4450-4300	56289	150D105X0035A2
C	18	CAP TANT 6.8 UF 20PCT 35V	4450-5000	56289	150D685X0035B2
C	19	CAP CER DISC 39PF 10PCT 500V	4404-0398	72982	0831082Z5D00390K
C	20	CAP CER DISC 39PF 10PCT 500V	4404-0398	72982	0831082Z5D00390K
C	23	CAP CER DISC 39PF 10PCT 500V	4404-0398	72982	0831082Z5D00390K
C	24	CAP CER MONO 1UF 20PCT 50VGP	4400-2070	72982	8131-M050-651-105M
C	25	CAP MYLAR .1UF 10 PCT 100V	4860-8250	56289	410P 0.1 UF 10PCT
C	26	CAP MYLAR .009UF 5 PCT 100V	4860-7510	56289	410P .009 UF 5PCT
C	27	CAP MICA 768PF 1PCT 500V	4710-0768	81349	CM06FD768FN
C	29	CAP CER MONO 1UF 20PCT 50VGP	4400-2070	72982	8131-M050-651-105M
C	30	CAP CER DISC .01UF 80/20PCT 100V	4401-3100	72982	0805540Z5U00103Z
C	31	CAP CER MONO 2.2UF 20PCT 50VGP	4400-2080	72982	8141-M050-651-225M
C	33	CAP CER MONO 1UF 20PCT 50VGP	4400-2070	72982	8131-M050-651-105M
C	34	CAP CER MONO 1UF 20PCT 50VGP	4400-2070	72982	8131-M050-651-105M
C	35	CAP CER MONO 2.2UF 20PCT 50VGP	4400-2080	72982	8141-M050-651-225M
C	37	CAP CER DISC 39PF 10PCT 500V	4404-0398	72982	0831082Z5D00390K
C	38	CAP CER MONO 1UF 20PCT 50VGP	4400-2070	72982	8131-M050-651-105M
C	39	CAP CER MONO 1UF 20PCT 50VGP	4400-2070	72982	8131-M050-651-105M
C	42	CAP CER DISC 39PF 10PCT 500V	4404-0398	72982	0831082Z5D00390K
C	43	CAP TANT 47 UF 20PCT 20V	4450-5614	56289	150D476X0020R2
C	46	CAP CER MONO 1UF 20PCT 50VGP	4400-2070	72982	8131-M050-651-105M
C	47	CAP CER MONO 1UF 20PCT 50VGP	4400-2070	72982	8131-M050-651-105M
C	48	CAP CER MONO 1UF 20PCT 50VGP	4400-2070	72982	8131-M050-651-105M
C	49	CAP CER MONO 1UF 20PCT 50VGP	4400-2070	72982	8131-M050-651-105M
C	50	CAP CER MONO 0.1UF 20PCT 50VGP	4400-2050	72982	8131-M050-651-104M
C	51	CAP CER MONO 1UF 20PCT 50VGP	4400-2070	72982	8131-M050-651-105M
C	52	CAP CER MONO 1UF 20PCT 50VGP	4400-2070	72982	8131-M050-651-105M
C	53	CAP CER MONO 1UF 20PCT 50VGP	4400-2070	72982	8131-M050-651-105M
C	54	CAP CER MONO 0.1UF 20PCT 50VGP	4400-2050	72982	8131-M050-651-104M
C	55	CAP CER DISC .01UF 80/20PCT 100V	4401-3100	72982	0805540Z5U00103Z
CR	1	ZENER 1N748A 3.9V 5PCT .4W	6083-1002	14433	1N748A
CR	2	ZENER 1N753A 6.2V 5PCT .4W	6083-1006	14433	1N753A
CR	3	ZENER 1N748A 3.9V 5PCT .4W	6083-1002	14433	1N748A
CR	4	ZENER 1N753A 6.2V 5PCT .4W	6083-1006	14433	1N753A
CR	5	DIODE RECTIFIER 1N645	6082-1016	14433	1N645
CR	6	DIODE RECTIFIER 1N645	6082-1016	14433	1N645
CR	7	DIODE RECTIFIER 1N645	6082-1016	14433	1N645
CR	8	DIODE RECTIFIER 1N645	6082-1016	14433	1N645
CR	9	DIODE 1N4151 75PIV IR.1UA SI	6082-1001	14433	1N3604
CR	10	DIODE 1N4151 75PIV IR.1UA SI	6082-1001	14433	1N3604
CR	11	DIODE 1N4151 75PIV IR.1UA SI	6082-1001	14433	1N3604
CR	12	DIODE 1N4151 75PIV IR.1UA SI	6082-1001	14433	1N3604
CR	13	DIODE 1N4151 75PIV IR.1UA SI	6082-1001	14433	1N3604
CR	14	DIODE 1N4151 75PIV IR.1UA SI	6082-1001	14433	1N3604
CR	15	DIODE 1N4151 75PIV IR.1UA SI	6082-1001	14433	1N3604
CR	16	DIODE 1N4151 75PIV IR.1UA SI	6082-1001	14433	1N3604
CR	18	ZENER 1N750 4.7V 10PCT .4W	6083-1003	14433	1N750
CR	19	DIODE 1N995 15PIV IR 10UA GE	6082-1002	03877	1N995
CR	20	DIODE 1N995 15PIV IR 10UA GE	6082-1002	03877	1N995
CR	21	DIODE 1N995 15PIV IR 10UA GE	6082-1002	03877	1N995
CR	22	DIODE 1N995 15PIV IR 10UA GE	6082-1002	03877	1N995
CR	23	DIODE 1N995 15PIV IR 10UA GE	6082-1002	03877	1N995
CR	24	DIODE 1N995 15PIV IR 10UA GE	6082-1002	03877	1N995
CR	25	DIODE 1N995 15PIV IR 10UA GE	6082-1002	03877	1N995

File Courtesy of GRWiki.org

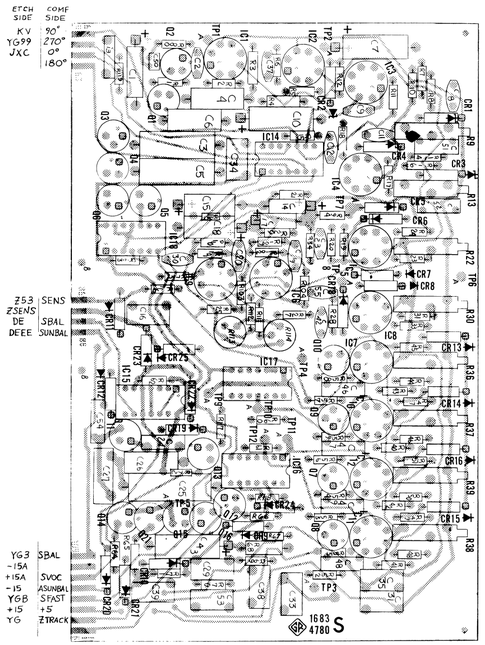

NOTE: *Orientation:* Viewed from parts side. *Part number:* Refer to caption. *Symbolism:* Outlined area = part; gray ckt pattern (if any) = parts side, black = other side.

Reference (P/N 1683-4780) etched-circuit board layout.

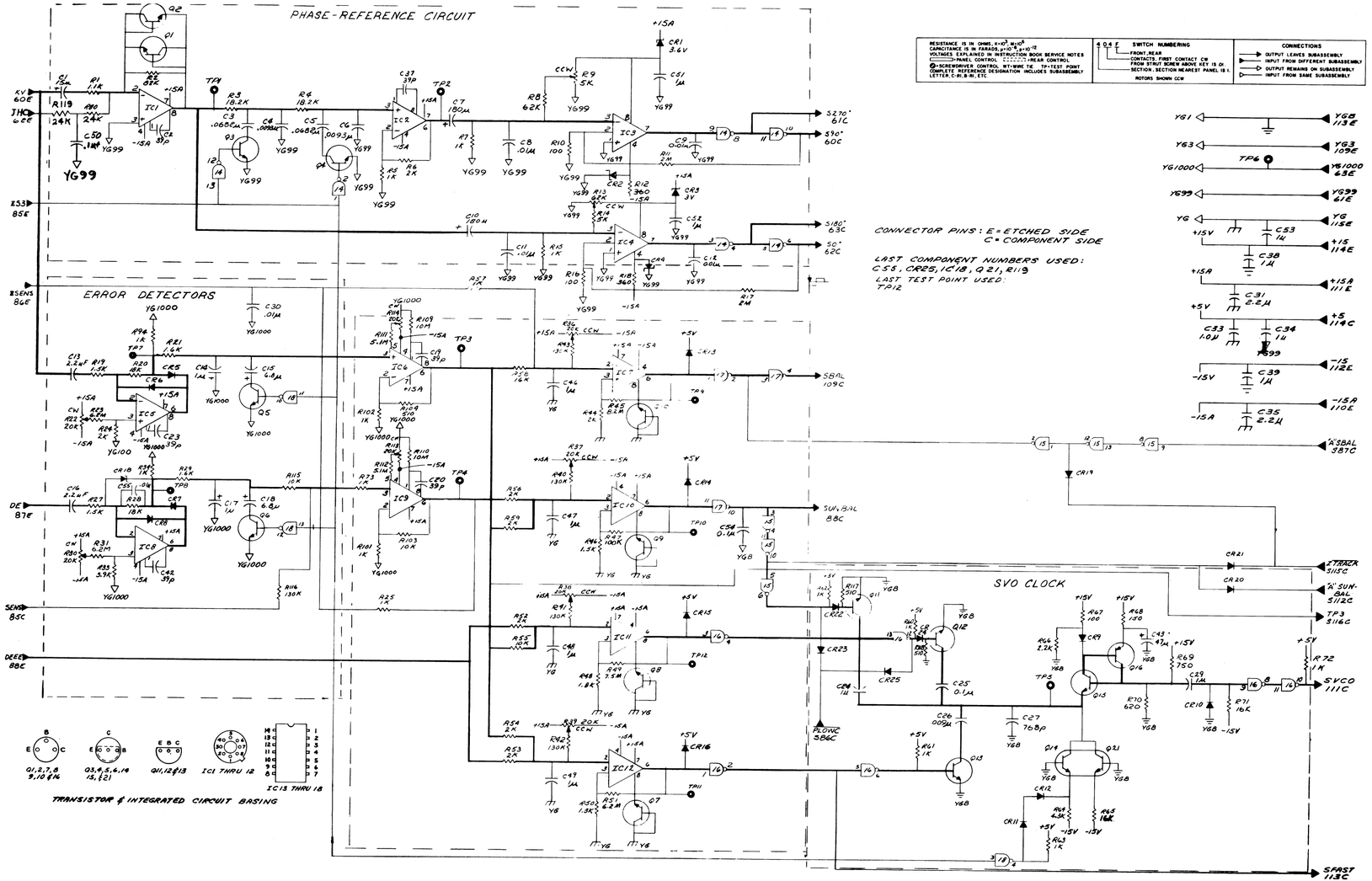

Figure 6-22. Reference board schematic, S.

File Courtesy of GRWiki.org

ELECTRICAL PARTS LIST (cont)

ANALOGIC PC BOARD S P/N 1683-4780

REFDES		DESCRIPTION	PART NO.	FMC	MFGR PART NUMBER
Q	1	TRANSISTOR 2N4275	8210-1126	07263	2N4275
Q	2	TRANSISTOR 2N4275	8210-1126	07263	2N4275
Q	3	TRANSISTOR 2N3414	8210-1047	03508	2N3414
Q	4	TRANSISTOR 2N3414	8210-1047	03508	2N3414
Q	5	TRANSISTOR 2N3414	8210-1047	03508	2N3414
Q	6	TRANSISTOR 2N3414	8210-1047	03508	2N3414
Q	7	TRANSISTOR 2N3646	8210-1119	07263	2N3646
Q	8	TRANSISTOR 2N3646	8210-1119	07263	2N3646
Q	9	TRANSISTOR 2N3646	8210-1119	07263	2N3646
Q	10	TRANSISTOR 2N3646	8210-1119	07263	2N3646
Q	11	TRANSISTOR 2N4123	8210-1123	04713	2N4123
Q	12	TRANSISTOR 2N4123	8210-1123	04713	2N4123
Q	13	TRANSISTOR 2N4123	8210-1123	04713	2N4123
Q	14	TRANSISTOR 2N3414	8210-1047	03508	2N3414
Q	15	TRANSISTOR 2N5249	8210-1077	03508	2N5249
Q	16	TRANSISTOR 2N4258	8210-1136	07263	2N4258
Q	21	TRANSISTOR 2N3414	8210-1047	03508	2N3414
R	1	RES COMP 1.1 K OHM 5PCT 1/4W	6099-2115	81349	RCR07G112J
R	2	RES COMP 82 K 5PCT 1/4W	6099-3825	81349	RCR07G823J
R	5	RES COMP 1.0 K 5PCT 1/4W	6099-2105	81349	RCR07G102J
R	6	RES COMP 2.0 K OHM 5PCT 1/4W	6099-2205	81349	RCR07G202J
R	7	RES COMP 1.0 K 5PCT 1/4W	6099-2105	81349	RCR07G102J
R	8	RES COMP 62 K OHM 5PCT 1/4W	6099-3625	81349	RCR07G623J
R	9	POT WW TRM 5K OHM 10 PCT 20T	6051-2509	80294	3005P-1-502
R	10	RES COMP 100 OHM 5PCT 1/4W	6099-1105	81349	RCR07G101J
R	11	RES COMP 2.0 M OHM 5PCT 1/4W	6099-5205	81349	RCR07G205J
R	12	RES COMP 360 OHM 5PCT 1/4W	6099-1365	81349	RCR07G361J
R	13	POT WW TRM 5K OHM 10 PCT 20T	6051-2509	80294	3005P-1-502
R	14	RES COMP 62 K OHM 5PCT 1/4W	6099-3625	81349	RCR07G623J
R	15	RES COMP 1.0 K 5PCT 1/4W	6099-2105	81349	RCR07G102J
R	16	RES COMP 100 OHM 5PCT 1/4W	6099-1105	81349	RCR07G101J
R	17	RES COMP 2.0 M OHM 5PCT 1/4W	6099-5205	81349	RCR07G205J
R	18	RES COMP 360 OHM 5PCT 1/4W	6099-1365	81349	RCR07G361J
R	19	RES COMP 1.5 K 5PCT 1/4W	6099-2155	81349	RCR07G152J
R	20	RES COMP 18 K 5PCT 1/4W	6099-3185	81349	RCR07G183J
R	21	RES COMP 1.6 K OHM 5PCT 1/4W	6099-2165	81349	RCR07G162J
R	22	POT WW TRM 20K OHM 10 PCT 20T	6051-3209	80294	3005P-1-203
R	23	RES COMP 6.2 M OHM 5PCT 1/4W	6099-5625	81349	RCR07G625J
R	24	RES COMP 2.0 K OHM 5PCT 1/4W	6099-2205	81349	RCR07G202J
R	25	RES COMP 1.0 K 5PCT 1/4W	6099-2105	81349	RCR07G102J
R	27	RES COMP 1.5 K 5PCT 1/4W	6099-2155	81349	RCR07G152J
R	28	RES COMP 18 K 5PCT 1/4W	6099-3185	81349	RCR07G183J
R	29	RES COMP 1.6 K OHM 5PCT 1/4W	6099-2165	81349	RCR07G162J
R	30	POT WW TRM 20K OHM 10 PCT 20T	6051-3209	80294	3005P-1-203
R	31	RES COMP 6.2 M OHM 5PCT 1/4W	6099-5625	81349	RCR07G625J
R	33	RES COMP 3.9 K 5PCT 1/4W	6099-2395	81349	RCR07G392J
R	34	RES COMP 1.0 K 5PCT 1/4W	6099-2105	81349	RCR07G102J
R	36	POT WW TRM 20K OHM 10 PCT 20T	6051-3209	80294	3005P-1-203
R	37	POT WW TRM 20K OHM 10 PCT 20T	6051-3209	80294	3005P-1-203
R	38	POT WW TRM 20K OHM 10 PCT 20T	6051-3209	80294	3005P-1-203
R	39	POT WW TRM 20K OHM 10 PCT 20T	6051-3209	80294	3005P-1-203
R	40	RES COMP 130 K OHM 5PCT 1/4W	6099-4135	81349	RCR07G134J
R	41	RES COMP 130 K OHM 5PCT 1/4W	6099-4135	81349	RCR07G134J
R	42	RES COMP 130 K OHM 5PCT 1/4W	6099-4135	81349	RCR07G134J
R	43	RES COMP 130 K OHM 5PCT 1/4W	6099-4135	81349	RCR07G134J
R	44	RES COMP 2.0 K OHM 5PCT 1/4W	6099-2205	81349	RCR07G202J
R	45	RES COMP 8.2 M 5PCT 1/4W	6099-5825	81349	RCR07G825J
R	46	RES COMP 1.5 K 5PCT 1/4W	6099-2155	81349	RCR07G152J
R	47	RES COMP 100 K 5PCT 1/4W	6099-4105	81349	RCR07G104J
R	48	RES COMP 1.8 K 5PCT 1/4W	6099-2185	81349	RCR07G182J
R	49	RES COMP 7.5 M OHM 5PCT 1/4W	6099-5755	81349	RCR07G755J
R	50	RES COMP 1.3 K OHM 5PCT 1/4W	6099-2135	81349	RCR07G132J
R	51	RES COMP 6.2 M OHM 5PCT 1/4W	6099-5625	81349	RCR07G625J
R	52	RES COMP 2.0 K OHM 5PCT 1/4W	6099-2205	81349	RCR07G202J
R	53	RES COMP 2.0 K OHM 5PCT 1/4W	6099-2205	81349	RCR07G202J
R	54	RES COMP 2.0 K OHM 5PCT 1/4W	6099-2205	81349	RCR07G202J
R	55	RES COMP 10 K 5PCT 1/4W	6099-3105	81349	RCR07G103J
R	56	RES COMP 2.0 K OHM 5PCT 1/4W	6099-2205	81349	RCR07G202J
R	57	RES COMP 1.0 K 5PCT 1/4W	6099-2105	81349	RCR07G102J
R	58	RES COMP 16 K OHM 5PCT 1/4W	6099-3165	81349	RCR07G163J
R	59	RES COMP 2.0 K OHM 5PCT 1/4W	6099-2205	81349	RCR07G202J

ELECTRICAL PARTS LIST (cont)

ANALOGIC PC BOARD S P/N 1683-4780

REFDES		DESCRIPTION	PART NO.	FMC	MFGR PART NUMBER
R	60	RES COMP 1.0 K 5PCT 1/4W	6099-2105	81349	RCR07G102J
R	61	RES COMP 1.0 K 5PCT 1/4W	6099-2105	81349	RCR07G102J
R	62	RES COMP 1.0 K 5PCT 1/4W	6099-2105	81349	RCR07G102J
R	63	RES COMP 1.0 K 5PCT 1/4W	6099-2105	81349	RCR07G102J
R	64	RES COMP 4.3 K OHM 5PCT 1/4W	6099-2435	81349	RCR07G432J
R	65	RES COMP 16 K OHM 5PCT 1/4W	6099-3165	81349	RCR07G163J
R	66	RES COMP 2.2 K 5PCT 1/4W	6099-2225	81349	RCR07G222J
R	67	RES COMP 100 OHM 5PCT 1/4W	6099-1105	81349	RCR07G101J
R	68	RES COMP 150 OHM 5PCT 1/2W	6100-1155	81349	RCR20G151J
R	69	RES COMP 750 OHM 5PCT 1/4W	6099-1755	81349	RCR07G751J
R	70	RES COMP 620 OHM 5PCT 1/4W	6099-1625	81349	RCR07G621J
R	71	RES COMP 16 K OHM 5PCT 1/4W	6099-3165	81349	RCR07G163J
R	72	RES COMP 1.0 K 5PCT 1/4W	6099-2105	81349	RCR07G102J
R	73	RES COMP 1.0 K 5PCT 1/4W	6099-2105	81349	RCR07G102J
R	80	RES COMP 24 K OHM 5PCT 1/4W	6099-3245	81349	RCR07G243J
R	94	RES COMP 1.0 K 5PCT 1/4W	6099-2105	81349	RCR07G102J
R	101	RES COMP 1.0 K 5PCT 1/4W	6099-2105	81349	RCR07G102J
R	102	RES COMP 1.0 K 5PCT 1/4W	6099-2105	81349	RCR07G102J
R	103	RES COMP 10 K 5PCT 1/4W	6099-3105	81349	RCR07G103J
R	104	RES COMP 510 OHM 5PCT 1/4W	6099-1515	81349	RCR07G511J
R	109	RES COMP 10 M 5PCT 1/4W	6099-6105	81349	RCR07G106J
R	110	RES COMP 10 M 5PCT 1/4W	6099-6105	81349	RCR07G106J
R	111	RES COMP 5.1 M OHM 5PCT 1/4W	6099-5515	81349	RCR07G515J
R	112	RES COMP 5.1 M OHM 5PCT 1/4W	6099-5515	81349	RCR07G515J
R	113	POT CERM TRM 20K OHM 10 PCT 1T	6049-0219	01121	SV2031
R	114	POT CERM TRM 20K OHM 10 PCT 1T	6049-0219	01121	SV2031
R	115	RES COMP 10 K 5PCT 1/4W	6099-3105	81349	RCR07G103J
R	116	RES COMP 130 K OHM 5PCT 1/4W	6099-4135	81349	RCR07G134J
R	117	RES COMP 510 OHM 5PCT 1/4W	6099-1515	81349	RCR07G511J
R	118	RES COMP 510 OHM 5PCT 1/4W	6099-1515	81349	RCR07G511J
R	119	RES COMP 24 K OHM 5PCT 1/4W	6099-3245	81349	RCR07G243J
U	1	IC LINEAR LM301A	5432-1004	12040	LM301AH
U	2	IC LINEAR LM301A	5432-1004	12040	LM301AH
U	3	IC LINEAR VA710C	5432-7101	04713	MC1710CG
U	4	IC LINEAR VA710C	5432-7101	04713	MC1710CG
U	5	IC LINEAR LM301A	5432-1004	12040	LM301AH
U	6	IC LINEAR LM301A	5432-1004	12040	LM301AH
U	7	IC LINEAR LM301A	5432-1004	12040	LM301AH
U	8	IC LINEAR LM301A	5432-1004	12040	LM301AH
U	9	IC LINEAR LM301A	5432-1004	12040	LM301AH
U	10	IC LINEAR LM301A	5432-1004	12040	LM301AH
U	11	IC LINEAR LM301A	5432-1004	12040	LM301AH
U	12	IC LINEAR LM301A	5432-1004	12040	LM301AH
U	14	ICD DTUL936 14D INVERTER	5431-9362	01295	SN15836N
U	15	ICD DTUL936 14D INVERTER	5431-9362	01295	SN15836N
U	16	ICD DTUL936 14D INVERTER	5431-9362	01295	SN15836N
U	17	ICD DTUL936 14D INVERTER	5431-9362	01295	SN15836N
U	18	ICD DTUL936 14D INVERTER	5431-9362	01295	SN15836N

ELECTRICAL PARTS LIST

OSCILLATOR PC BOARD T P/N 1683-4727

REFDES		DESCRIPTION	PART NO.	FMC	MFGR PART NUMBER
C	1	CAP POLYSTYR .01UF 2PCT 50V	4865-2100	74861	11503-TYV
C	2	CAP POLYSTYR .01UF 2PCT 50V	4865-2100	74861	11503-TYV
C	3	CAP POLYSTYR .0733UF 2PCT 50V	4865-2733	74861	11698-TYV
C	4	CAP POLYSTYR .0733UF 2PCT 50V	4865-2733	74861	11698-TYV
C	5	CAP TANT 2.2 UF 20PCT 20V	4450-4500	56289	150D225X0020A2
C	6	CAP CER DISC 39PF 10PCT 500V	4404-0398	72982	0831U82Z5000390K
C	8	CAP CER SQ .10UF 80/20PCT 100V	4403-4100	72982	8131M100651104Z
C	9	CAP TANT 4.7 UF 20PCT 10V	4450-4700	56289	150D475X0010A2
CR	1	DIODE 1N4151 75PIV IR.1UA SI	6082-1001	14433	1N3604
IC	1	IC LINEAR LM301A	5432-1004	12040	LM301AH
IC	2	ICD DTUL936 14D INVERTER	5431-9362	01295	SN15836N
KL	3	RELAY COIL 15V 125AMP-TURNS	6090-1130	24655	6090-1130
KL	4	RELAY COIL 15V 125AMP-TURNS	6090-1130	24655	6090-1130
KS	3	SWITCH REED FORM A DRY	6090-0800	24655	6090-0800
KS	4	SWITCH REED FORM A DRY	6090-0800	24655	6090-0800
Q	2	TRANSISTOR 2N3414	8210-1047	03508	2N3414
Q	3	TRANSISTOR 2N4125	8210-1125	04713	2N4125
Q	4	TRANSISTOR 2N3414	8210-1047	03508	2N3414
Q	5	TRANSISTOR 2N1302	8210-1018	01295	2N1302
Q	7	TRANSISTOR 2N4125	8210-1125	04713	2N4125
R	1	POT WW TRM 2K OHM 10 PCT 20T	6051-2209	80294	3005P-1-202
R	2	POT WW TRM 2K OHM 10 PCT 20T	6051-2209	80294	3005P-1-202
R	3	RES GR 700 OHM 5 PCT 1/2W	6982-3001	24655	6982-3001
R	4	RES GR 14.3K OHM .25 PCT 1/2W	6982-5010	24655	6982-5010
R	5	RES GR 15.92K OHM .25 PCT 1/2W	6982-5011	24655	6982-5011
R	6	RES COMP 33 K 5PCT 1/4W	6099-3335	81349	RCR07G333J
R	7	RES COMP 30 K OHM 5PCT 1/4W	6099-3305	81349	RCR07G303J
R	8	RES COMP 10 K 5PCT 1/4W	6099-3105	81349	RCR07G103J
R	9	RES COMP 470 OHM 5PCT 1/4W	6099-1475	81349	RCR07G471J
R	10	THERMISTOR 40K OHM 20PCT	6740-1400	15801	BA-44V3
R	11	RES COMP 10 K 5PCT 1/4W	6099-3105	81349	RCR07G103J
R	12	RES COMP 6.2 K OHM 5PCT 1/4W	6099-2625	81349	RCR07G622J
R	14	RES COMP 1.0 K 5PCT 1/4W	6099-2105	81349	RCR07G102J
R	15	RES COMP 3.3 K 5PCT 1/4W	6099-2335	81349	RCR07G332J
R	17	RES COMP 20 K OHM 5PCT 1/4W	6099-3205	81349	RCR07G203J
R	18	RES COMP 16 K OHM 5PCT 1/4W	6099-3165	81349	RCR07G163J
R	19	RES COMP 100 K 5PCT 1/4W	6099-4105	81349	RCR07G104J
R	20	POT WW TRM 1K OHM 10 PCT 20T	6051-2109	80294	3005P-1-102
R	21	RES COMP 2.0 K OHM 5PCT 1/4W	6099-2205	81349	RCR07G202J
R	27	RES COMP 220 OHM 5PCT 1/4W	6099-1225	81349	RCR07G221J

File Courtesy of GRWiki.org

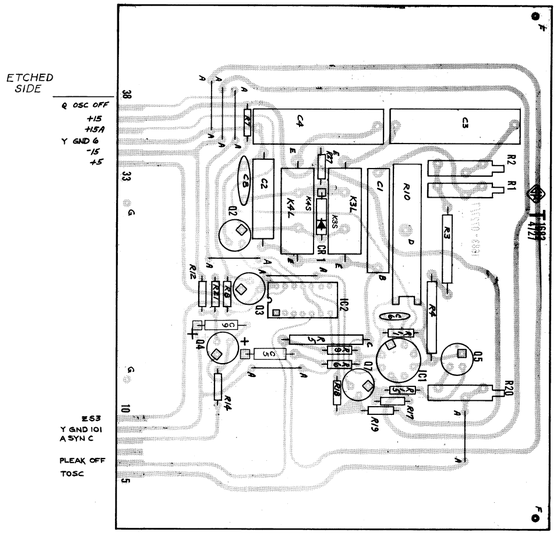

NOTE: *Orientation:* Viewed from parts side. *Part number:* Refer to caption. *Symbolism:* Outlined area = part; gray ckt pattern (if any) = parts side, black = other side.

Oscillator (P/N 1683-4724) etched-circuit board layout.

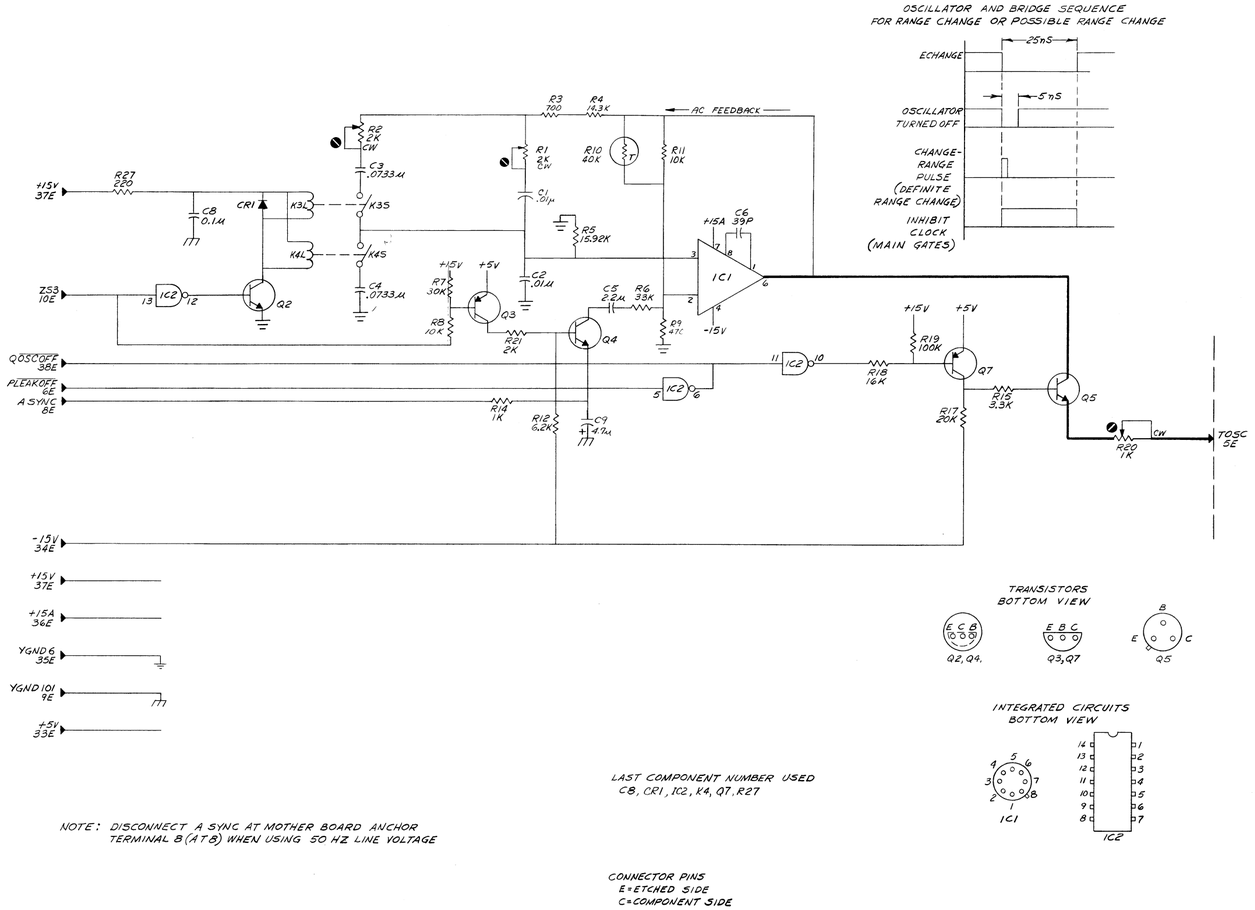

Figure 6-23. Oscillator board schematic, T.

File Courtesy of GRWiki.org

ELECTRICAL PARTS LIST

POWER SUPPLY PC BOARD V P/N 1683-4715

REFDES	DESCRIPTION	PART NO.	FMC	MFGR PART NUMBER
C 1	CAP CER MONO 0.22UF 20PCT 50VGP	4400-2052	72982	8131-M050-651-224M
C 2	CAP ALUM 2000 UF 6V	4450-6106		
C 3	CAP TANT 4.7 UF 20PCT 10V	4450-4700	56289	150D475X0010A2
C 4	CAP CER DISC.047/.05UF80/20 100V	4403-3500	56289	0845024Z5U05032
C 5	CAP TANT 47 UF 20PCT 20V	4450-5614	56289	150D476X0020R2
C 6	CAP TANT 4.7 UF 20PCT 10V	4450-4700	56289	150D475X0010A2
C 7	CAP TANT 47 UF 20PCT 20V	4450-5614	56289	150D476X0020R2
C 8	CAP CER DISC.047/.05UF80/20 100V	4403-3500	56289	0845024Z5U05032
C 9	CAP ALUM 680 UF 15V	4450-6015	56289	30D687G015
C 10	CAP TANT 47 UF 20PCT 20V	4450-5614	56289	150D476X0020R2
CR 1	DIODE 1N695 20PIV IR 20UA GE	6082-1014	14433	1N695
CR 2	DIODE 1N695 20PIV IR 20UA GE	6082-1014	14433	1N695
CR 4	DIODE 1N4154 25PIV IR.1UA SI	6082-1012	14433	IN4154
CR 5	DIODE 1N4154 25PIV IR.1UA SI	6082-1012	14433	IN4154
CR 6	ZENER 1N957B 6.8V 5PCT .4W	6083-1009	07910	IN957B
CR 7	DIODE 1N4154 25PIV IR.1UA SI	6082-1012	14433	IN4154
CR 9	DIODE 1N695 20PIV IR 20UA GE	6082-1014	14433	1N695
CR 10	DIODE 1N695 20PIV IR 20UA GE	6082-1014	14433	1N695
CR 11	DIODE 1N4154 25PIV IR.1UA SI	6082-1012	14433	IN4154
CR 12	DIODE 1N4154 25PIV IR.1UA SI	6082-1012	14433	IN4154
Q 1	TRANSISTOR 2N3905	8210-1114	04713	2N3905
Q 2	TRANSISTOR 2N3905	8210-1114	04713	2N3905
Q 3	TRANSISTOR 2N3414	8210-1047	03508	2N3414
Q 4	TRANSISTOR 2N3414	8210-1047	03508	2N3414
Q 5	TRANSISTOR 2N3414	8210-1047	03508	2N3414
Q 6	TRANSISTOR 2N3414	8210-1047	03508	2N3414
Q 7	TRANSISTOR 2N697	8210-1040	04713	2N697
Q 8	TRANSISTOR 2N3905	8210-1114	04713	2N3905
Q 9	TRANSISTOR 2N4250	8210-1135	07263	2N4250
Q 10	TRANSISTOR 2N3414	8210-1047	03508	2N3414
Q 11	TRANSISTOR 2N3903	8210-1132	04713	2N3903
Q 12	TRANSISTOR 2N1131	8210-1025	04713	2N1131
Q 13	TRANSISTOR 2N3905	8210-1114	04713	2N3905
Q 19	TRANSISTOR 40250	8210-1095	02735	40250
Q 21	TRANSISTOR 2N3740	8210-1121	04713	2N3740
Q 22	TRANSISTOR 2N3905	8210-1114	04713	2N3905
Q 23	TRANSISTOR 2N3414	8210-1047	03508	2N3414
Q 24	TRANSISTOR 2N3414	8210-1047	03508	2N3414
Q 25	TRANSISTOR 2N3414	8210-1047	03508	2N3414
R 3	RES COMP 3.3 K 5PCT 1/4W	6099-2335	81349	RCR07G332J
R 5	RES COMP 33 OHM 5PCT 1/4W	6099-0335	81349	RCR07G330J
R 6	RES COMP 4.7 K 5PCT 1/4W	6099-2475	81349	RCR07G472J
R 8	RES COMP 11 K OHM 5PCT 1/4W	6099-3115	81349	RCR07G113J
R 9	RES FLM 1K 1 PCT 1/8W	6250-1100	81349	RN55D1001F
R 10	RES FLM 2K 1 PCT 1/8W	6250-1200	81349	RN55D2001F
R 11	RES WW MOLDED .82 OHM 5 PCT 2W	6760-8825	75042	BWH 0.82 OHM 5PCT
R 12	RES COMP 3.3 K 5PCT 1/4W	6099-2335	81349	RCR07G332J
R 14	RES COMP 360 OHM 5PCT 1/4W	6099-1365	81349	RCR07G361J
R 15	RES COMP 4.7 OHM 5PCT 1/4W	6099-9475	81349	RCR07G4R7J
R 16	RES COMP 10 K 5PCT 1/4W	6099-3105	81349	RCR07G103J
R 17	RES COMP 4.7 K 5PCT 1/4W	6099-2475	81349	RCR07G472J
R 18	RES COMP 10 K 5PCT 1/4W	6099-3105	81349	RCR07G103J
R 19	RES FLM 3.01K 1 PCT 1/8W	6250-1301	81349	RN55D3011F
R 20	RES COMP 750 OHM 5PCT 1/4W	6099-1755	81349	RCR07G751J
R 22	RES COMP 4.3 K OHM 5PCT 1/4W	6099-2435	81349	RCR07G432J
R 23	POT WW TRM 1K OHM 10 PCT 20T	6051-2109	80294	3005P-1-102
R 24	RES FLM 3.16K 1 PCT 1/4W	6350-1316	81349	RN60D3161F
R 25	RES COMP 4.7 K 5PCT 1/4W	6099-2475	81349	RCR07G472J
R 26	RES COMP 10 K 5PCT 1/4W	6099-3105	81349	RCR07G103J
R 27	RES COMP 36 K OHM 5PCT 1/4W	6099-3365	81349	RCR07G363J
R 28	RES FLM 5.11K 1 PCT 1/4W	6350-1511	81349	RN60D5111F
R 29	POT WW TRM 500 OHM 10 PCT 20T	6051-1509	80294	3005P-1-501
R 30	RES FLM 4.87K 1 PCT 1/2W	6450-1487	81349	RN65D4871F
R 31	RES COMP 4.7 K 5PCT 1/4W	6099-2475	81349	RCR07G472J
R 32	RES COMP 360 OHM 5PCT 1/4W	6099-1365	81349	RCR07G361J
R 33	RES COMP 4.7 OHM 5PCT 1/4W	6099-9475	81349	RCR07G4R7J
R 34	RES COMP 300 OHM 5PCT 1/2W	6100-1305	81349	RCR20G301J
R 35	RES WW MOLDED 1.5 OHM 10 PCT 2W	6760-9159	75042	BWH 1.5 OHM 10PCT
R 36	RES COMP 3.3 K 5PCT 1/4W	6099-2335	81349	RCR07G332J
R 37	RES WW MOLDED .82 OHM 5 PCT 2W	6760-8825	75042	BWH 0.82 OHM 5PCT

ELECTRICAL PARTS LIST (cont)

POWER SUPPLY PC BOARD V P/N 1683-4715

REFDES	DESCRIPTION	PART NO.	FMC	MFGR PART NUMBER
R 39	RES COMP 12 K 5PCT 1/2W	6100-3125	81349	RCR20G123J
R 40	RES COMP 1.2 K 5PCT 1/4W	6099-2125	81349	RCR07G122J
R 41	RES COMP 150 OHM 5PCT 1/4W	6099-1155	81349	RCR07G151J
R 42	RES COMP 15 K 5PCT 1/4W	6099-3155	81349	RCR07G153J
R 43	RES COMP 20 OHM 5PCT 2W	6120-0205	81349	RCR42G200J
R 44	RES COMP 620 OHM 5PCT 1/4W	6099-1625	81349	RCR07G621J
R 45	RES COMP 2.7 K 5PCT 1/4W	6099-2275	81349	RCR07G272J
R 46	RES COMP 1.0 K 5PCT 1/4W	6099-2105	81349	RCR07G102J
R 47	RES FLM 5.11K 1 PCT 1/4W	6350-1511	81349	RN60D5111F
R 48	RES FLM 4.64K 1 PCT 1/2W	6450-1464	81349	RN65D4641F
R 49	RES COMP 9.1 K OHM 5PCT 1/4W	6099-2915	81349	RCR07G912J
R 50	RES COMP 1.0 K 5PCT 1/4W	6099-2105	81349	RCR07G102J
R 51	RES COMP 2.0 K OHM 5PCT 1/4W	6099-2205	81349	RCR07G202J
R 52	RES COMP 300 OHM 5PCT 1/2W	6100-1305	81349	RCR20G301J

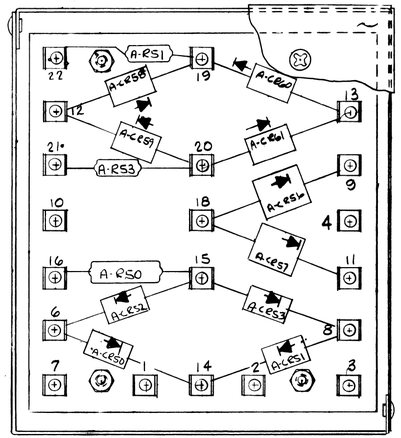

NOTE

Refer to the list on page 6-4 for the transformer and transistor assembly parts.

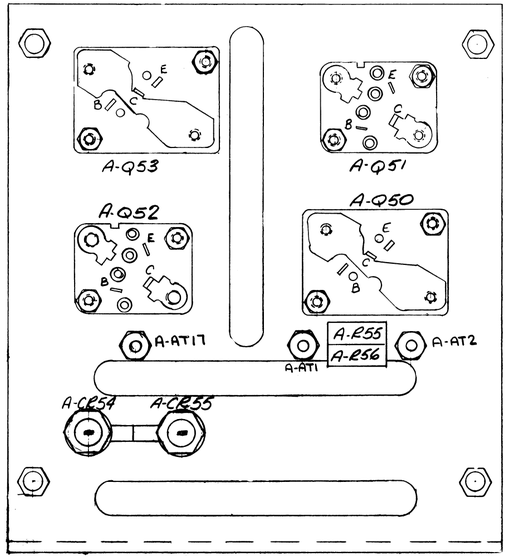

Figure 6-24. Transformer assembly and transistor bracket assembly, V.

File Courtesy of GRWiki.org

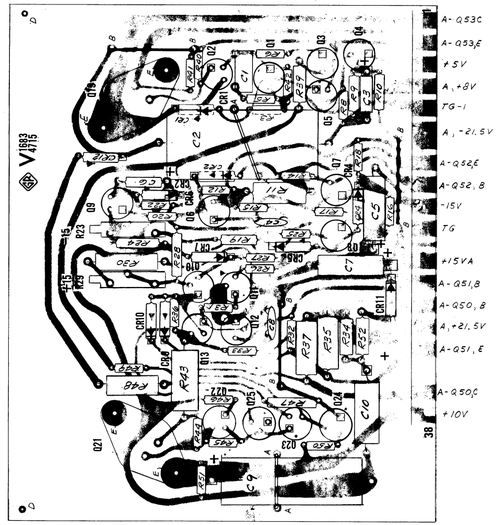

NOTE: *Orientation:* Viewed from parts side. *Part number:* Refer to caption. *Symbolism:* Outlined area = part; gray ckt pattern (if any) = parts side, black = other side.

Power supply (P/N 1683-4715) etched-circuit board layout.

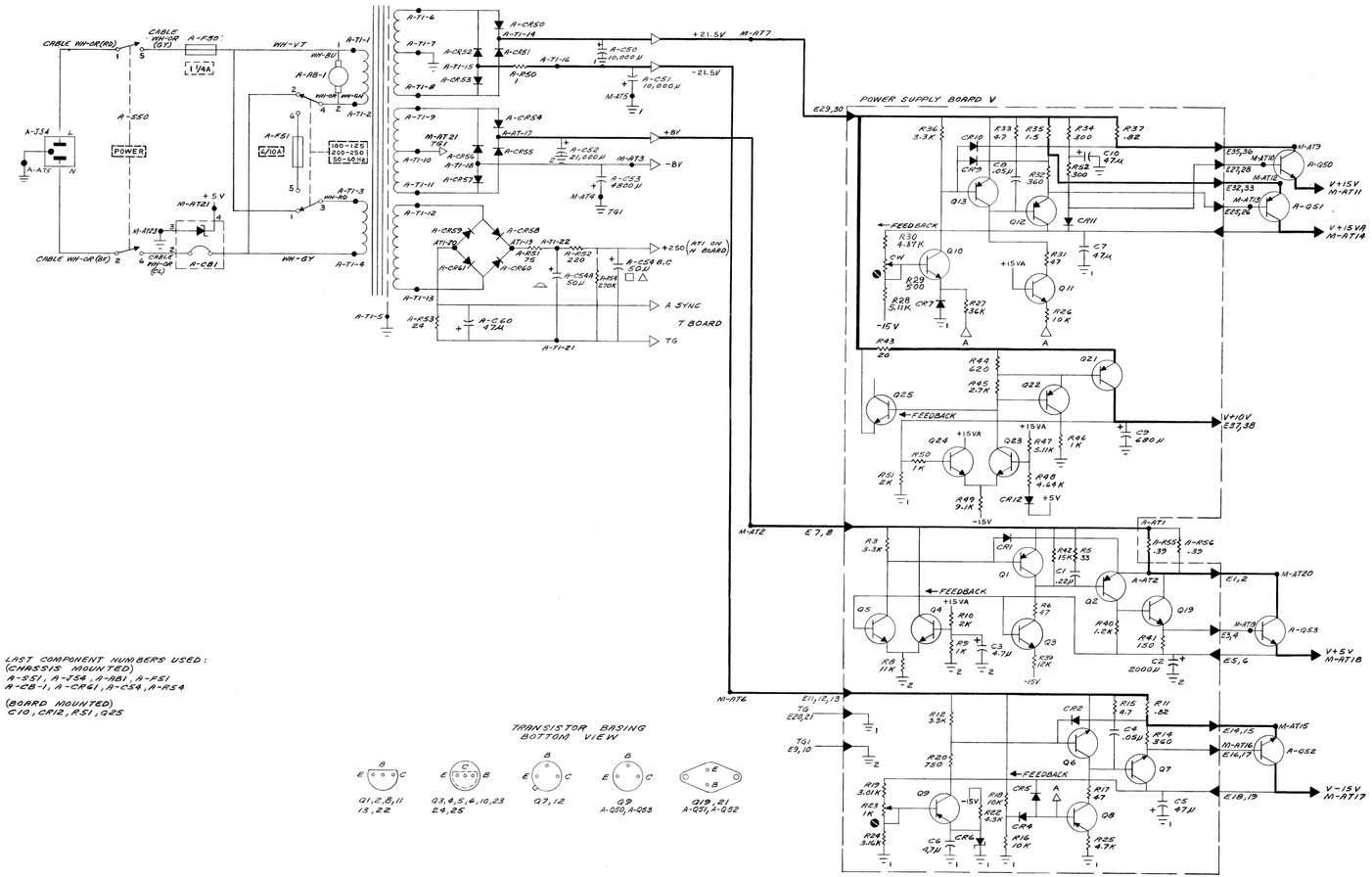

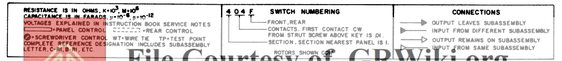

Figure 6-25. Power supply board and line-voltage circuit schematic, V.

File Courtesy of GRWiki.org

ELECTRICAL PARTS LIST

BRIDGE PC BOARD Y P/N 1683-4746

REFDES		DESCRIPTION	PART NO.	FMC	MFGR PART NUMBER
C	1	CAP MYLAR 2 UF 5PCT 600V	4860-1700	75042	X663FR 2 UF 5PCT
C	3	CAP CER DISC .01UF 80/20PCT 100V	4401-3100	72982	0805540Z5U0103Z
C	4	CAP TANT 4.7 UF 20PCT 10V	4450-4700	56289	150D475X0010A2
C	5	CAP CER DISC .02UF 80/20PCT 100V	4402-3200	56289	55C21 .02UF
C	6	CAP TANT 68 UF 20PCT 15V	4450-5615	56289	150D686X0015R2
C	7	CAP TANT 68 UF 20PCT 15V	4450-5615	56289	150D686X0015R2
C	8	CAP TANT 330 UF 20PCT 6V	4450-5707	56289	150D337X0006S2
C	9	CAP TANT 180 UF 20PCT 6V	4450-5617	56289	150D187X0006R2
C	10	CAP CER DISC .02UF 80/20PCT 100V	4402-3200	56289	55C21 .02UF
C	11	CAP CER DISC .02UF 80/20PCT 100V	4402-3200	56289	55C21 .02UF
C	12	CAP CER TUB 4.7PF+-.5PF 500V NPO	4400-2700	72982	0315 000 COHO 479 D
C	13	CAP TANT 15 UF 20PCT 20V	4450-5200	56289	150D156X0020B2
C	14	CAP CER DISC .02UF 80/20PCT 100V	4402-3200	56289	55C21 .02UF
C	16	CAP TANT 68 UF 20PCT 15V	4450-5615	56289	150D686X0015R2
C	17	CAP TANT 68 UF 20PCT 15V	4450-5615	56289	150D686X0015R2
C	18	CAP CER DISC 1000PF 80/20PCT 500	4404-2109	72982	0831082Z5U00102Z
C	20	CAP TANT 15 UF 20PCT 20V	4450-5200	56289	150D156X0020B2
C	21	CAP CER DISC 2200PF 10PCT 500V	4405-2228	72982	0801082Z5F00222K
C	23	CAP TANT 68 UF 20PCT 15V	4450-5615	56289	150D686X0015R2
C	25	CAP TANT 68 UF 20PCT 15V	4450-5615	56289	150D686X0015R2
C	26	CAP CER TUB 4.7PF+-.5PF 500V NPO	4400-2700	72982	0315 000 COHO 479 D
C	27	CAP CER TUB 3.3PF 5PCT 500V	4400-0330	95121	QC 3.3PF 5PCT 500V
C	28	CAP CER TUB 6.8PF 5PCT 500V	4400-0680	95121	QC 6.8PF 5PCT 500V
C	29	CAP CER TUB 1.8PF 5PCT 500V	4400-0180	95121	QC 1.8PF 5PCT 500V
C	30	CAP CER MONO 1UF 20PCT 50VGP	4400-2070	72982	8131-M050-651-105M
C	31	CAP CER MONO 1UF 20PCT 50VGP	4400-2070	72982	8131-M050-651-105M
C	32	CAP CER MONO 2.2UF 20PCT 50VGP	4400-2080	72982	8141-M050-651-225M
C	33	CAP TANT 4.7 UF 20PCT 10V	4450-4700	56289	150D475X0010A2
C	36	CAP CER MONO 1UF 20PCT 50VGP	4400-2070	72982	8131-M050-651-105M
C	37	CAP CER MONO 2.2UF 20PCT 50VGP	4400-2080	72982	8141-M050-651-225M
C	38	CAP CER MONO 2.2UF 20PCT 50VGP	4400-2080	72982	8141-M050-651-225M
C	39	CAP CER TRIM 2-8 PF PC NPO	4910-2033	72982	538-006 A 2-8PF
CR	1	DIODE RECTIFIER 1N4003	6081-1001	14433	1N4003
CR	2	DIODE 1N4151 75PIV IR.1UA SI	6082-1001	14433	1N3604
CR	3	DIODE 1N4151 75PIV IR.1UA SI	6082-1001	14433	1N3604
CR	7	DIODE 1N4151 75PIV IR.1UA SI	6082-1001	14433	1N3604
CR	8	DIODE 1N4151 75PIV IR.1UA SI	6082-1001	14433	1N3604
CR	13	DIODE 1N4151 75PIV IR.1UA SI	6082-1001	14433	1N3604
CR	14	DIODE 1N4151 75PIV IR.1UA SI	6082-1001	14433	1N3604
CR	15	DIODE 1N4151 75PIV IR.1UA SI	6082-1001	14433	1N3604
CR	16	DIODE 1N4151 75PIV IR.1UA SI	6082-1001	14433	1N3604
CR	17	DIODE 1N4151 75PIV IR.1UA SI	6082-1001	14433	1N3604
CR	18	DIODE 1N4151 75PIV IR.1UA SI	6082-1001	14433	1N3604
CR	19	DIODE 1N4151 75PIV IR.1UA SI	6082-1001	14433	1N3604
CR	20	DIODE 1N4151 75PIV IR.1UA SI	6082-1001	14433	1N3604
CR	21	DIODE 1N4151 75PIV IR.1UA SI	6082-1001	14433	1N3604
CR	22	DIODE 1N4151 75PIV IR.1UA SI	6082-1001	14433	1N3604
CR	23	DIODE 1N4151 75PIV IR.1UA SI	6082-1001	14433	1N3604
CR	24	DIODE 1N4151 75PIV IR.1UA SI	6082-1001	14433	1N3604
CR	25	DIODE RECTIFIER 1N4003	6081-1001	14433	1N4003
CR	26	DIODE RECTIFIER 1N645	6082-1016	14433	1N645
CR	27	DIODE RECTIFIER 1N645	6082-1016	14433	1N645
CR	28	ZENER 1N759A 12V 5PCT .4W	6083-1014	14433	1N759A
CR	29	ZENER 1N759A 12V 5PCT .4W	6083-1014	14433	1N759A
CR	30	DIODE 1N4151 75PIV IR.1UA SI	6082-1001	14433	1N3604
CR	31	DIODE 1N4151 75PIV IR.1UA SI	6082-1001	14433	1N3604
CR	32	ZENER 1N759A 12V 5PCT .4W	6083-1014	14433	1N759A
CR	33	ZENER 1N759A 12V 5PCT .4W	6083-1014	14433	1N759A
CR	34	ZENER 1N957A 6.8V 10PCT .4W	6083-1008	07910	1N957A
CR	35	DIODE RECTIFIER 1N4003	6081-1001	14433	1N4003
CR	36	DIODE RECTIFIER 1N4003	6081-1001	14433	1N4003
CR	37	DIODE 1N4154 25PIV IR.1UA SI	6082-1012	14433	1N4154
CR	38	DIODE 1N4154 25PIV IR.1UA SI	6082-1012	14433	1N4154
CR	39	DIODE 1N4154 25PIV IR.1UA SI	6082-1012	14433	1N4154
IC	1	ICD DTUL936 14D INVERTER	5431-9362	01295	SN15836N
IC	2	ICD DTUL962 14D GATE	5431-9622	04713	MC862P
IC	3	ICD DTUL936 14D INVERTER	5431-9362	01295	SN15836N
K	1	RELAY 12VDC	6090-1300	14195	401-4AR-12
K	2	RELAY 12VDC	6090-1300	14195	401-4AR-12

ELECTRICAL PARTS LIST (cont)

BRIDGE PC BOARD Y P/N 1683-4746

REFDES		DESCRIPTION	PART NO.	FMC	MFGR PART NUMBER
KL	3	RELAY COIL 15V 125AMP-TURNS	6090-1130	24655	6090-1130
KL	4	RELAY COIL 15V 125AMP-TURNS	6090-1130	24655	6090-1130
KL	5	RELAY COIL 15V 125AMP-TURNS	6090-1130	24655	6090-1130
KL	6	RELAY COIL 15V 125AMP-TURNS	6090-1130	24655	6090-1130
KL	7	RELAY COIL 15V 125AMP-TURNS	6090-1130	24655	6090-1130
KL	8	RELAY COIL 15V 125AMP-TURNS	6090-1130	24655	6090-1130
KL	9	RELAY COIL 15V 125AMP-TURNS	6090-1130	24655	6090-1130
KL	11	RELAY COIL 15V 125AMP-TURNS	6090-1130	24655	6090-1130
KL	12	RELAY COIL 15V 125AMP-TURNS	6090-1130	24655	6090-1130
KS	3	SWITCH REED FORM A HG	6090-1165	24655	6090-1165
KS	4	SWITCH REED FORM A DRY	6090-0800	24655	6090-0800
KS	5	SWITCH REED FORM A DRY	6090-0800	24655	6090-0800
KS	6	SWITCH REED FORM A DRY	6090-0800	24655	6090-0800
KS	7	SWITCH REED FORM A DRY	6090-0800	24655	6090-0800
KS	8	SWITCH REED FORM A DRY	6090-0800	24655	6090-0800
KS	9	SWITCH REED FORM A DRY	6090-0800	24655	6090-0800
KS	11	SWITCH REED FORM A DRY	6090-0800	24655	6090-0800
KS	12	SWITCH REED FORM A DRY	6090-0800	24655	6090-0800
Q	1	TRANSISTOR 2N5249	8210-1077	03508	2N5249
Q	2	TRANSISTOR 2N6008	8210-1083	03508	2N6008
Q	3	TRANSISTOR 2N4250	8210-1135	07263	2N4250
Q	4	TRANSISTOR 2N4384	8210-1131	56289	2N4384
Q	5	TRANSISTOR TD-100	8210-1130	56289	TD-100
Q	7	TRANSISTOR 2N4250	8210-1135	07263	2N4250
Q	8	TRANSISTOR 2N3414	8210-1047	03508	2N3414
Q	9	TRANSISTOR 2N4123	8210-1123	04713	2N4123
Q	10	TRANSISTOR 2N3414	8210-1047	03508	2N3414
Q	14	TRANSISTOR TD-100	8210-1130	56289	TD-100
Q	16	TRANSISTOR 2N4250	8210-1135	07263	2N4250
Q	18	TRANSISTOR 2N4123	8210-1123	04713	2N4123
Q	19	TRANSISTOR 2N3414	8210-1047	03508	2N3414
Q	21	TRANSISTOR 2N3414	8210-1047	03508	2N3414
Q	22	TRANSISTOR 2N3414	8210-1047	03508	2N3414
Q	23	TRANSISTOR 2N3414	8210-1047	03508	2N3414
Q	24	TRANSISTOR 2N3414	8210-1047	03508	2N3414
Q	25	TRANSISTOR 2N3414	8210-1047	03508	2N3414
Q	26	TRANSISTOR 2N3414	8210-1047	03508	2N3414
Q	27	TRANSISTOR 2N3414	8210-1047	03508	2N3414
Q	28	TRANSISTOR 2N3414	8210-1047	03508	2N3414
Q	29	TRANSISTOR 2N3414	8210-1047	03508	2N3414
Q	30	TRANSISTOR 2N3414	8210-1047	03508	2N3414
Q	31	TRANSISTOR 2N4123	8210-1123	04713	2N4123
Q	32	TRANSISTOR 2N3414	8210-1047	03508	2N3414
Q	33	TRANSISTOR 2N5249	8210-1077	03508	2N5249
Q	36	TRANSISTOR 2N3414	8210-1047	03508	2N3414
Q	37	TRANSISTOR 2N5249	8210-1077	03508	2N5249
R	3	RES COMP 620 OHM 5PCT 1/4W	6099-1625	81349	RCR07G621J
R	4	RES COMP 7.5 K OHM 5PCT 1/4W	6099-2755	81349	RCR07G752J
R	5	RES COMP 47 OHM 5PCT 1/4W	6099-0475	81349	RCR07G470J
R	6	RES COMP 47 K 5PCT 1/4W	6099-3475	81349	RCR07G473J
R	7	RES COMP 62 K OHM 5PCT 1/4W	6099-3625	81349	RCR07G623J
R	8	RES COMP 750 OHM 5PCT 1/4W	6099-1755	81349	RCR07G751J
R	9	RES COMP 7.5 OHM 5PCT 1/4W	6099-9755	81349	RCR07G7R5J
R	10	RES COMP 620 OHM 5PCT 1/4W	6099-1625	81349	RCR07G621J
R	11	RES COMP 100 OHM 5PCT 1/4W	6099-1105	81349	RCR07G101J
R	12	RES COMP 100 OHM 5PCT 1/4W	6099-1105	81349	RCR07G101J
R	13	RES GR 50K OHM .01 PCT 1W	6983-5036	24655	6983-5036
R	15	RES GR 250K OHM .025 PCT 1.5W	6984-6007	24655	6984-6007
R	16	RES GR 250K OHM .025 PCT 1.5W	6984-6007	24655	6984-6007
R	17	RES GR 49.95K OHM .01 PCT 1W	6983-5035	24655	6983-5035
R	18	RES COMP 7.5 K OHM 5PCT 1/4W	6099-2755	81349	RCR07G752J
R	19	RES COMP 24 K OHM 5PCT 1/4W	6099-3245	81349	RCR07G243J
R	20	RES COMP 51 K OHM 5PCT 1/4W	6099-3515	81349	RCR07G513J
R	21	RES COMP 51 K OHM 5PCT 1/4W	6099-3515	81349	RCR07G513J
R	22	RES COMP 20 OHM 5PCT 1/4W	6099-0205	81349	RCR07G200J
R	23	RES GR 5.0005K OHM .01 PCT 1W	6983-4041	24655	6983-4041
R	25	POT WW TRM 100 OHM 10 PCT 20T	6051-1109	80294	3005P-1-101
R	26	RES COMP 750 OHM 5PCT 1/4W	6099-1755	81349	RCR07G751J

ELECTRICAL PARTS LIST (cont)

BRIDGE PC BOARD Y P/N 1683-4746

REFDES		DESCRIPTION	PART NO.	FMC	MFGR PART NUMBER
R	27	RES COMP 20 OHM 5PCT 1/4W	6099-0205	81349	RCR07G200J
R	28	RES COMP 750 OHM 5PCT 1/4W	6099-1755	81349	RCR07G751J
R	29	RES COMP 240 OHM 5PCT 1/4W	6099-1245	81349	RCR07G241J
R	30	RES COMP 130 OHM 5PCT 1/4W	6099-1135	81349	RCR07G131J
R	34	RES GR 8.9982 OHM .01 PCT 1W	6983-1002	24655	6983-1002
R	35	RES GR 90 OHM .01 PCT 1W	6983-2002	24655	6983-2002
R	36	RES GR 900 OHM .01 PCT 1W	6983-3013	24655	6983-3013
R	37	RES GR 111.11 OHM .01 PCT 1W	6983-3014	24655	6983-3014
R	38	RES GR 900 OHM .01 PCT 1W	6983-3013	24655	6983-3013
R	39	RES COMP 91 OHM 5PCT 1/4W	6099-0915	81349	RCR07G910J
R	40	RES COMP 7.5 K OHM 5PCT 1/4W	6099-2755	81349	RCR07G752J
R	41	RES COMP 24 K OHM 5PCT 1/4W	6099-3245	81349	RCR07G243J
R	42	RES COMP 51 K OHM 5PCT 1/4W	6099-3515	81349	RCR07G513J
R	43	RES COMP 51 K OHM 5PCT 1/4W	6099-3515	81349	RCR07G513J
R	44	RES GR 1.474K OHM .01 PCT 1W	6983-4039	24655	6983-4039
R	45	RES GR 14.740K OHM .01 PCT 1W	6983-5037	24655	6983-5037
R	46	RES GR 66.327K OHM .01 PCT 1.5W	6984-5007	24655	6984-5007
R	47	RES COMP 16 K OHM 5PCT 1/4W	6099-3165	81349	RCR07G163J
R	49	RES COMP 750 OHM 5PCT 1/4W	6099-1755	81349	RCR07G751J
R	50	RES COMP 680 OHM 5PCT 1/4W	6099-1685	81349	RCR07G681J
R	51	RES COMP 91 OHM 5PCT 1/4W	6099-0915	81349	RCR07G910J
R	52	RES COMP 240 OHM 5PCT 1/4W	6099-1245	81349	RCR07G241J
R	53	RES COMP 130 OHM 5PCT 1/4W	6099-1135	81349	RCR07G131J
R	54	RES COMP 120 OHM 5PCT 1/4W	6099-1125	81349	RCR07G121J
R	57	RES COMP 20 K OHM 5PCT 1/4W	6099-3205	81349	RCR07G203J
R	58	RES COMP 5.1 K OHM 5PCT 1/4W	6099-2515	81349	RCR07G512J
R	59	RES COMP 750 OHM 5PCT 1/4W	6099-1755	81349	RCR07G751J
R	60	RES GR 66.327K OHM .01 PCT 1.5W	6984-5007	24655	6984-5007
R	61	RES COMP 200 OHM 5PCT 1/4W	6099-1205	81349	RCR07G201J
R	70	RES COMP 220 OHM 5PCT 1/4W	6099-1225	81349	RCR07G221J
R	71	RES COMP 220 OHM 5PCT 1/4W	6099-1225	81349	RCR07G221J
R	72	RES COMP 36 OHM 5PCT 1/2W	6100-0365	81349	RCR20G360J
R	73	RES COMP 8.2 K 5PCT 1/4W	6099-2825	81349	RCR07G822J
R	74	RES COMP 240 K OHM 5PCT 1/4W	6099-4245	81349	RCR07G244J
R	75	RES COMP 12 K 5PCT 1/4W	6099-3125	81349	RCR07G123J
R	76	RES COMP 8.2 K 5PCT 1/4W	6099-2825	81349	RCR07G822J
R	77	RES COMP 220 K 5PCT 1/4W	6099-4225	81349	RCR07G224J
R	78	RES COMP 220 K 5PCT 1/4W	6099-4225	81349	RCR07G224J
R	80	RES COMP 4.7 K 5PCT 1/4W	6099-2475	81349	RCR07G472J
R	82	RES COMP 5.1 K OHM 5PCT 1/4W	6099-2515	81349	RCR07G512J
R	83	RES COMP 8.2 K 5PCT 1/4W	6099-2825	81349	RCR07G822J
R	84	RES COMP 22 K 5PCT 1/4W	6099-3225	81349	RCR07G223J
R	86	RES COMP 1.0 K 5PCT 1/4W	6099-2105	81349	RCR07G102J
SO	1	SOCKET IC 14 CONTACT PC	7540-1814	73803	C831410
SO	2	SOCKET IC 14 CONTACT PC	7540-1814	73803	C831410
SO	3	SOCKET IC 14 CONTACT PC	7540-1814	73803	C831410

File Courtesy of GRWiki.org

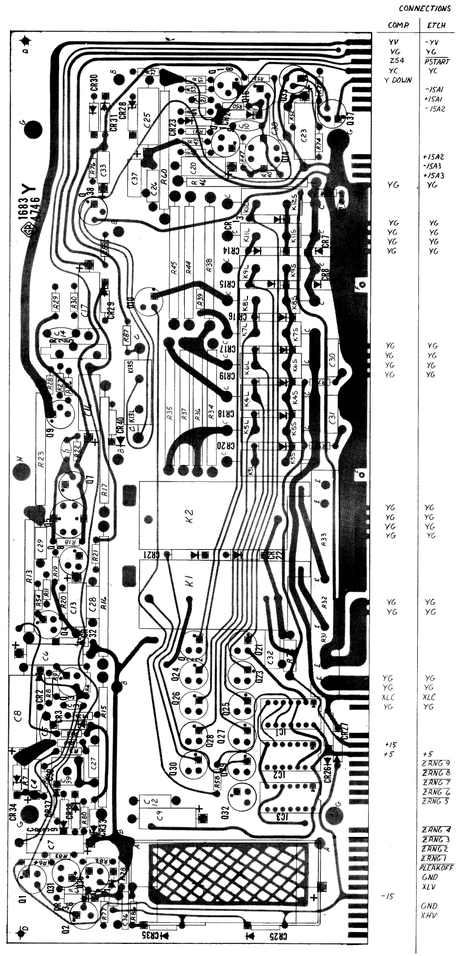

NOTE: *Orientation*: Viewed from parts side. *Part number:* Refer to caption. *Symbolism:* Outlined area = part; gray ckt pattern (if any) = parts side, black = other side. *Pins:* Square pad in ckt pattern = collector, I-C pin 1, cathode (of diode), or + end (of capacitor).

Y-bridge (P/N 1683-4746) etched-circuit board layout.

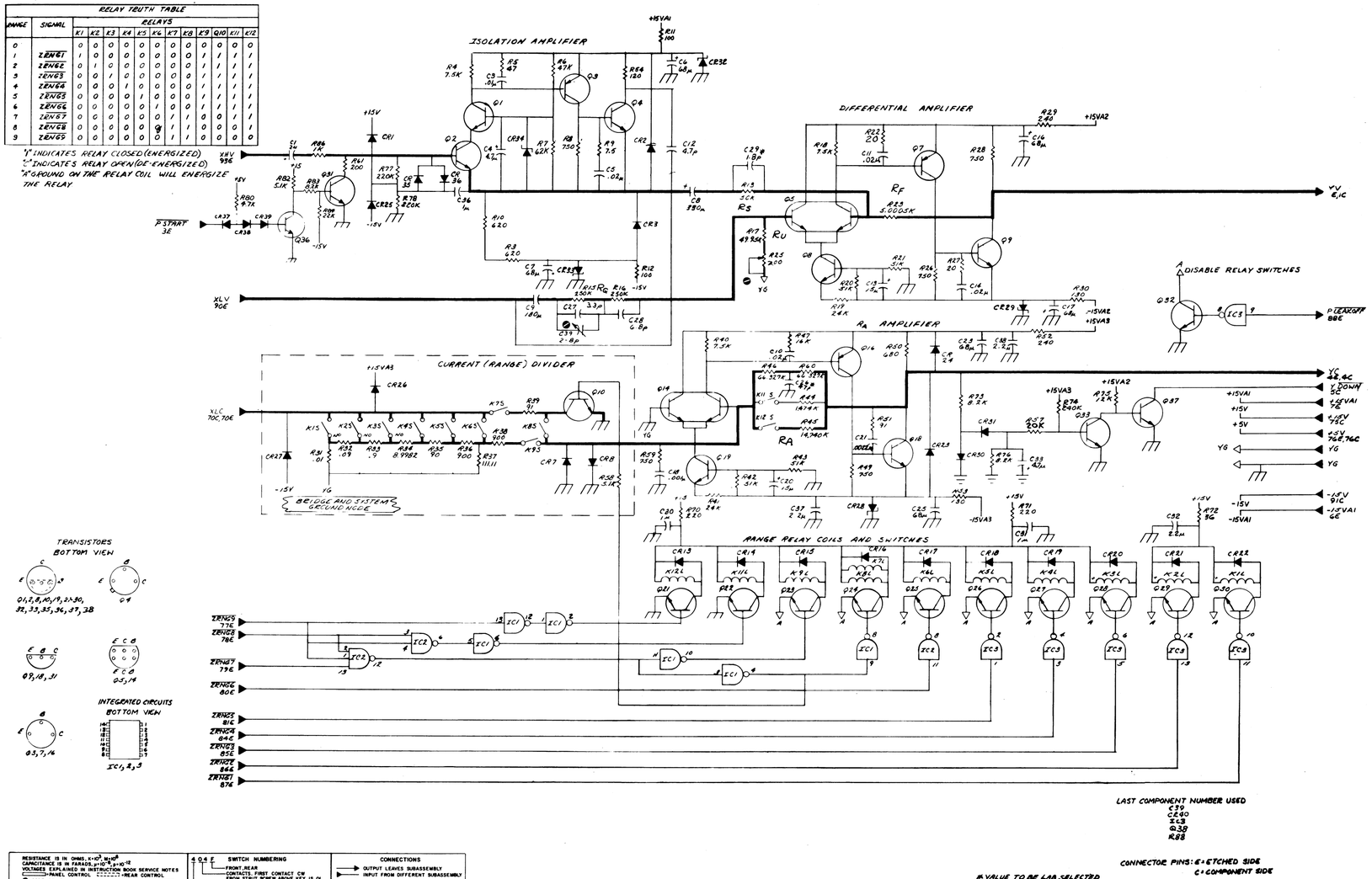

Figure 6-26. Y-bridge board schematic, Y.

File Courtesy of GRWiki.org

CONTROL PC BOARD Z P/N 1683-4775

REFDES		DESCRIPTION	PART NO.	FMC	MFGR PART NUMBER
C	1	CAP TANT 1.0 UF 20PCT 35V	4450-4300	56289	150D105X0035A2
C	2	CAP TANT 180 UF 20PCT 6V	4450-5617	56289	150D187X0006R2
C	3	CAP CER MONO 2.2UF 20PCT 50VSP	4400-2080	72982	8141-M050-651-225M
CR	1	DIODE 1N995 15PIV IR 10UA GE	6082-1002	03877	1N995
CR	2	DIODE 1N995 15PIV IR 10UA GE	6082-1002	03877	1N995
IC	3	ICD DTUL946 14D GATE	5431-9462	01295	SN15846N
IC	4	ICD DTUL946 14D GATE	5431-9462	01295	SN15846N
IC	13	ICD DTUL962 14D GATE	5431-9622	04713	MC862P
IC	14	ICD DTUL962 14D GATE	5431-9622	04713	MC862P
IC	15	ICD DTUL962 14D GATE	5431-9622	04713	MC862P
IC	16	ICD DTUL962 14D GATE	5431-9622	04713	MC862P
IC	17	ICD DTUL936 14D INVERTER	5431-9362	01295	SN15836N
IC	19	ICD DTUL932 14D BUFF GATE	5431-9322	01295	SN15832N
IC	20	ICD DTUL932 14D BUFF GATE	5431-9322	01295	SN15832N
IC	21	ICD DTUL946 14D GATE	5431-9462	01295	SN15846N
IC	22	ICD DTUL936 14D INVERTER	5431-9362	01295	SN15836N
IC	23	ICD DTUL936 14D INVERTER	5431-9362	01295	SN15836N
IC	25	ICD DTUL962 14D GATE	5431-9622	04713	MC862P
IC	26	ICD DTUL962 14D GATE	5431-9622	04713	MC862P
IC	27	ICD DTUL962 14D GATE	5431-9622	04713	MC862P
IC	28	ICD DTUL962 14D GATE	5431-9622	04713	MC862P
IC	30	ICD DTUL936 14D INVERTER	5431-9362	01295	SN15836N
Q	1	TRANSISTOR 2N3414	8210-1047	03508	2N3414
R	1	RES COMP 5.6 K 5PCT 1/4W	6099-2565	81349	RCR07G562J
R	2	RES COMP 5.6 K 5PCT 1/4W	6099-2565	81349	RCR07G562J
R	3	RES COMP 5.6 K 5PCT 1/4W	6099-2565	81349	RCR07G562J
R	4	RES COMP 5.6 K 5PCT 1/4W	6099-2565	81349	RCR07G562J
R	5	RES COMP 5.6 K 5PCT 1/4W	6099-2565	81349	RCR07G562J
R	6	RES COMP 5.6 K 5PCT 1/4W	6099-2565	81349	RCR07G562J
R	7	RES COMP 5.6 K 5PCT 1/4W	6099-2565	81349	RCR07G562J
R	8	RES COMP 5.6 K 5PCT 1/4W	6099-2565	81349	RCR07G562J
R	9	RES COMP 5.6 K 5PCT 1/4W	6099-2565	81349	RCR07G562J
R	10	RES COMP 5.6 K 5PCT 1/4W	6099-2565	81349	RCR07G562J
R	11	RES COMP 5.6 K 5PCT 1/4W	6099-2565	81349	RCR07G562J
R	12	RES COMP 5.6 K 5PCT 1/4W	6099-2565	81349	RCR07G562J
R	13	RES COMP 5.6 K 5PCT 1/4W	6099-2565	81349	RCR07G562J
R	14	RES COMP 5.6 K 5PCT 1/4W	6099-2565	81349	RCR07G562J
R	15	RES COMP 5.6 K 5PCT 1/4W	6099-2565	81349	RCR07G562J
R	17	RES COMP 5.6 K 5PCT 1/4W	6099-2565	81349	RCR07G562J
R	18	RES COMP 5.6 K 5PCT 1/4W	6099-2565	81349	RCR07G562J
R	19	RES COMP 5.6 K 5PCT 1/4W	6099-2565	81349	RCR07G562J
R	20	RES COMP 5.6 K 5PCT 1/4W	6099-2565	81349	RCR07G562J
R	21	RES COMP 5.6 K 5PCT 1/4W	6099-2565	81349	RCR07G562J
R	22	RES COMP 5.6 K 5PCT 1/4W	6099-2565	81349	RCR07G562J
R	23	RES COMP 5.6 K 5PCT 1/4W	6099-2565	81349	RCR07G562J
R	24	RES COMP 5.6 K 5PCT 1/4W	6099-2565	81349	RCR07G562J
R	26	RES COMP 5.6 K 5PCT 1/4W	6099-2565	81349	RCR07G562J
R	27	RES COMP 5.6 K 5PCT 1/4W	6099-2565	81349	RCR07G562J
R	28	RES COMP 5.6 K 5PCT 1/4W	6099-2565	81349	RCR07G562J
R	29	RES COMP 5.6 K 5PCT 1/4W	6099-2565	81349	RCR07G562J
R	30	RES COMP 5.6 K 5PCT 1/4W	6099-2565	81349	RCR07G562J
R	31	RES COMP 5.6 K 5PCT 1/4W	6099-2565	81349	RCR07G562J
R	32	RES COMP 5.6 K 5PCT 1/4W	6099-2565	81349	RCR07G562J
R	33	RES FLM 249 OHM 1 PCT 1/4W	6350-0249	81349	RN60D2490F
R	34	RES FLM 63.4K 1PCT 1/8W	6250-2634	81349	RN55D6342F
R	35	RES COMP 2.0 K OHM 5PCT 1/4W	6099-2205	81349	RCR07G202J
R	37	RES COMP 510 OHM 5PCT 1/4W	6099-1515	81349	RCR07G511J
R	38	RES COMP 130 OHM 5PCT 1/4W	6099-1135	81349	RCR07G131J

File Courtesy of GRWiki.org

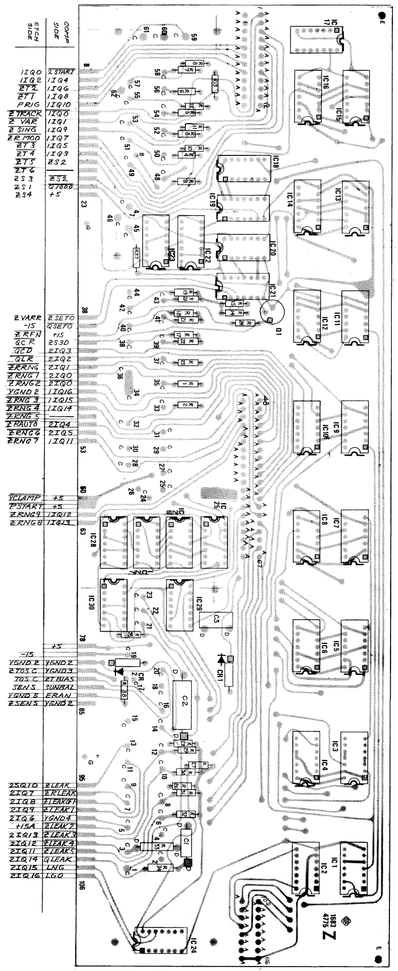

NOTE: *Orientation:* Viewed from parts side. *Part number:* Refer to caption.
Symbolism: Outlined area = part

Control (P/N 1683-4775) etched-circuit board layout.

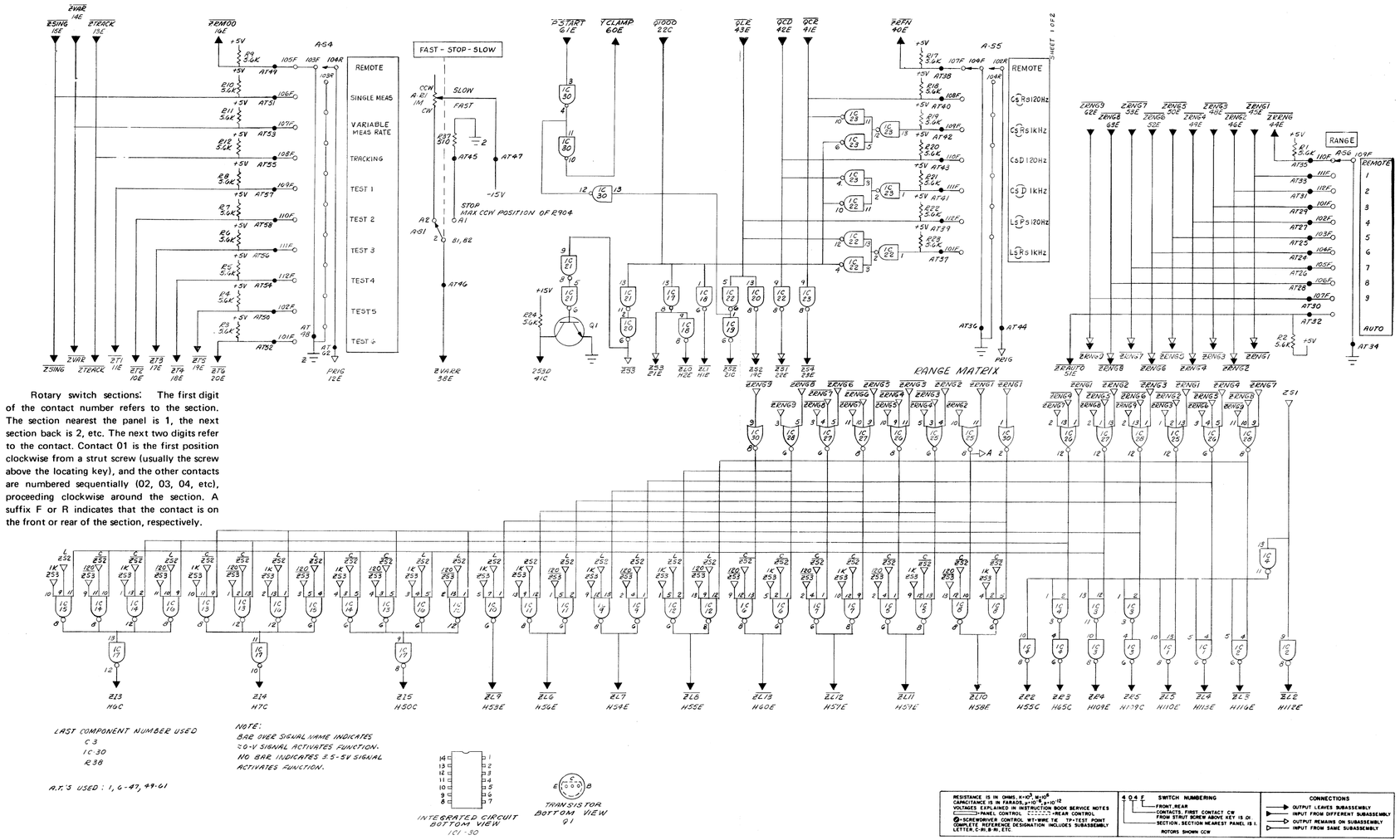

Rotary switch sections: The first digit of the contact number refers to the section. The section nearest the panel is 1, the next section back is 2, etc. The next two digits refer to the contact. Contact 01 is the first position clockwise from a strut screw (usually the screw above the locating key), and the other contacts are numbered sequentially (02, 03, 04, etc), proceeding clockwise around the section. A suffix F or R indicates that the contact is on the front or rear of the section, respectively.

Figure 6-27. Control board schematic (sheet 1 of 2), Z.

File Courtesy of GRWiki.org

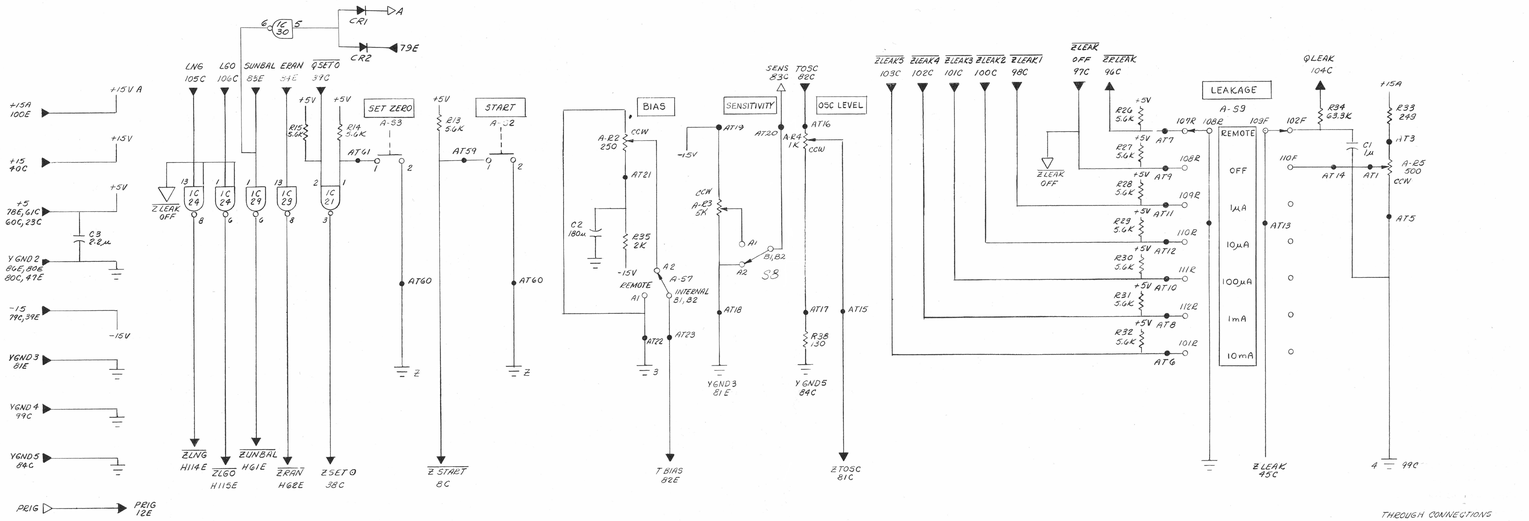

NOTE:
BAR OVER SIGNAL NAME INDICATES ≈0-V SIGNAL ACTIVATES FUNCTION
NO BAR INDICATES 3.5-5V SIGNAL ACTIVATES FUNCTION

THROUGH CONNECTIONS TO H BOARD

1IQ0 — 8E	2IQ0 — 45C
1IQ1 — 14C	2IQ1 — 44C
1IQ2 — 9E	2IQ2 — 43C
1IQ3 — 18C	2IQ3 — 42C
1IQ4 — 9C	2IQ4 — 51C
1IQ5 — 17C	2IQ5 — 52C
1IQ6 — 10C	2IQ6 — 99E
1IQ7 — 16C	2IQ7 — 96E
1IQ8 — 11C	2IQ8 — 97E
1IQ9 — 15C	2IQ9 — 98E
1IQ10 — 12C	2IQ10 — 95E
1IQ11 — 23C	2IQ11 — 103E
1IQ12 — 62C	2IQ12 — 102E
1IQ13 — 63C	2IQ13 — 101E
1IQ14 — 49C	2IQ14 — 104E
1IQ15 — 48C	2IQ15 — 105E
1IQ16 — 47C	2IQ16 — 106E
ERAN — 84E	
ZIQ3 — 46C	
IIQ0 — 13C	
+5 — 23C	
YGND 4 — 99C	
YGND 2 — 47E	

RESISTANCE IS IN OHMS; K=10^3 M=10^6
CAPACITANCE IS IN FARADS; μ=10^{-6} p=10^{-12}
VOLTAGES EXPLAINED IN INSTRUCTION BOOK SERVICE NOTES
▭ PANEL CONTROL ▭ REAR CONTROL
⊘ SCREWDRIVER CONTROL, WIT-WIRE TIE TP-TEST POINT
COMPLETE REFERENCE DESIGNATION INCLUDES SUBASSEMBLY LETTER, C-R1, B-R1, ETC.

4 Q 4 F — SWITCH NUMBERING
FRONT, REAR
CONTACTS, FIRST CONTACT CW FROM STRUT SCREW ABOVE KEY IS 01
SECTION, SECTION NEAREST PANEL IS 1.
ROTORS SHOWN CCW

CONNECTIONS
OUTPUT LEAVES SUBASSEMBLY
INPUT FROM DIFFERENT SUBASSEMBLY
OUTPUT REMAINS ON SUBASSEMBLY
INPUT FROM SAME SUBASSEMBLY

Figure 6-28. Control board schematic (sheet 2 of 2), Z.

MECHANICAL PARTS LIST

Qty	Fig Ref	Description	GR Part No.	Fed Mfg Code	Mfg Part No.	Fed Stock No.
1	1	Cable asm. - includes	1683-0210	24655	1683-0210	
2		Locking cable asm.	0874-4583	24655	0874-4583	
1	2	Cable asm. - includes	1683-0220	24655	1683-0220	
2		Locking cable asm.	0874-4583	24655	0874-4583	
2	3	Connector, clip, J101 + J103	4210-1030	24655	4210-1030	
1	4	Bushing, J102	4150-0900	24655	4150-0900	
1	5	Base plate	1680-8040	24655	1680-8040	
1	6	Plug asm.	8160-0944	24655	8160-0970	

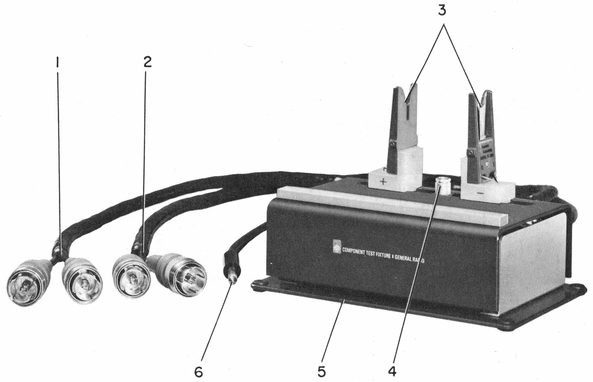

File Courtesy of GRWiki.org

Rotary switch sections: The first digit The section nearest the panel is 1, the next section back is 2, etc. The next two digits refer to the contact. Contact 01 is the first position clockwise from a strut screw (usually the screw above the locating key), and the other contacts are numbered sequentially (02, 03, 04, etc), proceeding clockwise around the section. A suffix F or R indicates that the contact is on the front or rear of the section, respectively.

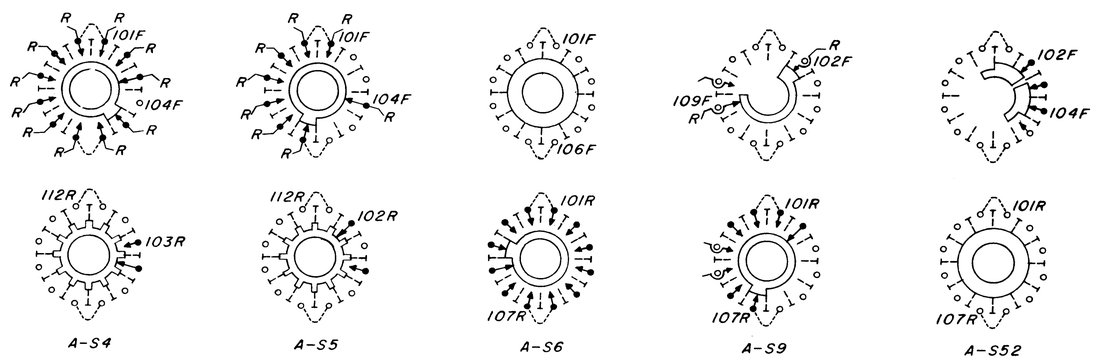

Figure 6-29. Switch diagram.

ELECTRICAL PARTS LIST

Ref Des	Description	GR Part No.	Fed Mfg Code	Mfg Part No.	Fed Stock No.
	1683-P1 TEST FIXTURE ELECTRICAL REPLACEABLE PARTS				
RESISTORS					
R1 and R2	Comp., 100 Ω ±5%	6099-1105	75042	BTS, 100 Ω ±5%	
PLUGS					
PL101	Plug asm.	8160-0944	24655	8160-0944	
SWITCH					
S101	Pushbutton, single	7870-1512	91929	BA-2RB	

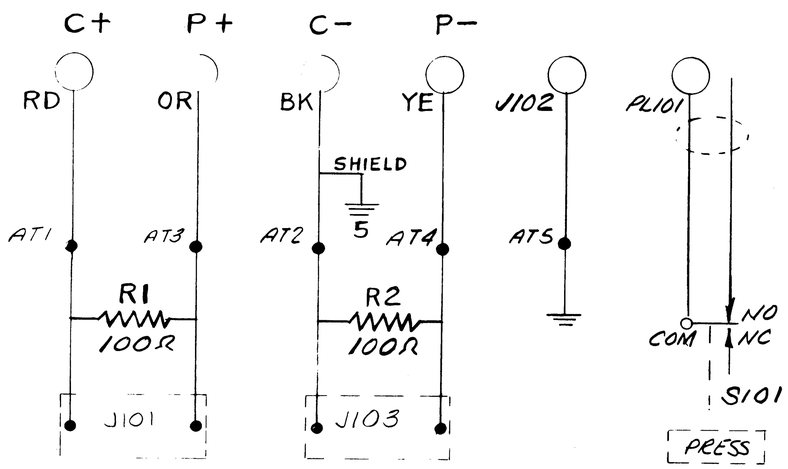

Figure 6-30. 1683-P1 Test Fixture schematic.

File Courtesy of GRWiki.org

GR874® COAXIAL COMPONENTS

GR874 CABLE CONNECTORS

APPLICABLE CABLE TYPES	CONNECTOR TYPE	CABLE	CABLE LOCKING	PANEL FLANGED	PANEL LOCKING	PANEL LOCKING RECESSED	PANEL LOCKING (KEYED)
	874-A2	-CA	-CLA	-PBA	-PLA	-PRLA	-PBRLA
50-OHM	RG-8A/U RG-9B/U RG-10A/U RG-87A/U RG-116/U RG-156/U RG-165/U RG-166/U RG-213/U RG-214/U RG-215/U RG-225/U RG-227/U	-C8A	-CL8A	-PB8A	-PL8A	-PRL8A	-PBRL8A
NON-50-OHM	RG-11A/U RG-12A/U RG-13A/U RG-63B/U RG-79B/U RG-89/U RG-144/U RG-146/U RG-149/U RG-216/U						
50-OHM	874-A3 RG-29/U RG-55/U (series) RG-58/U (series) RG-141A/U RG-142A/U RG-159/U RG-223/U	-C58A	-CL58A	-PB58A	-PL58A	-PRL58A	-PBRL58A
NON 50-OHM	RG-59/U RG-62/U (series) RG-71B/U RG-140/U RG-210/U	-C62A	-CL62A	-PB62A	-PL62A	-PRL62A	-PBRL62A
50-OHM	RG-174/U RG-188/U RG-316/U	-C174A	-CL174A	-PB174A	-PL174A	-PRL174A	-PBRL174A
NON 50-OHM	RG-161/U RG-179/U RG-187/U						

Example: For a locking cable connector for RG-8A/U, order Type 874-CL8A.

MISCELLANEOUS COAXIAL CONNECTORS

CONNECTOR TYPE	TYPE NO.	USED WITH
Basic	874-B	50-ohm air line
Basic Locking	874-BBL	50-ohm air line
Panel Locking	874-PLT	Wire lead
Panel Locking Recessed	874-PRLT	Wire lead
Panel Locking Feedthrough	874-PFL	Type 874 patch cords

CONNECTOR ASSEMBLY TOOLS

TYPE 874-	FUNCTION
TOK	Tool Kit
TO58	Crimping Tool
TO8	Crimping Tool

OTHER COAXIAL ELEMENTS

TYPE 874-	DESCRIPTION	TYPE 874-	DESCRIPTION
A2	50-Ω cable (low-loss)	MB	coupling probe
A3	50-Ω cable	MR, MRL, MRAL	mixer-rectifier
D20L, D50L	20-, 50-cm adjustable stubs	R20A, R20LA	patch cord, double shield
EL, EL-L	90° ell	R22A, R22LA	patch cord, double shield
F185L	185-MHz low-pass filter	R33, R34	patch cord, single shield
F500L	500-MHz low-pass filter	T, TL	tee
F1000L	1000-MHz low-pass filter	TPD, TPDL	power divider
F2000L	2000-MHz low-pass filter	U	U-line section
F4000L	4000-MHz low-pass filter	UBL	balun
FBL	bias insertion unit	VCL	variable capacitor
G3, G3L, G6, G6L G10, G10L, G14, G14L G20, G20L	3-, 6-, 10-, 14-, and 20-dB attenuators	VI	voltmeter indicator
		VQ, VQL	voltmeter detector
		VR, VRL	voltmeter rectifier
GAL	adjustable attenuator	W100	100-Ω termination
JR	rotary joint	W200	200-Ω termination
K, KL	coupling capacitor	W50B, W50BL	50-Ω termination
L10, L10L L20, L20L L30, L30L	10-, 20-, and 30-cm rigid air lines	WN, WN3, WNL	short-circuit terminations
		WO, WO3, WOL	open-circuit terminations
		X	insertion unit
LAL	35-58 cm adjustable line	XL	series inductor
LK10L, LK20L	constant-Z adjustable lines	Z	stand
LR	radiating line	-9508	air-line inner conductor
LTL	trombone constant-Z line	-9509	air-line outer conductor
ML	component mount		

L suffix indicates locking Type 874 Connector.

GR874 ADAPTORS

TO TYPE		TYPE 874
APC-7		QAP7L*
BNC	plug	QBJA QBJL*
	jack	QBPA
C	plug	QCJA* QCJL*
	jack	QCP
GR900		Q900L*
HN	plug	QHJA
	jack	QHPA
LC	plug	QLJA QLPA
LT	plug	QLTP
	jack	QLTJ
Microdot	plug	QMDJ QMDJL*
	jack	QMDP
N	plug	QNJA QNJL*
	jack	QNP QNPL*
SMA	plug	QMMJ QMMJL*
	jack	QMMP QMMPL*
SC (Sandia)	plug	QSCJ QSCJL*
	jack	QSCP
TNC	plug	QTNJ QTNJL*
	jack	QTNP
UHF	plug	QUJ QUJL*
	jack	QUP
GR274 (Binding post pair)	plug jack	777-Q3 274-Q2

*Locking GR874 Connector

Example: To connect Type 874 to a type-N jack, order Type 874-QNP

FOR COMPLETE DETAILS, REFER TO THE GENERAL RADIO CATALOG.

File Courtesy of GRWiki.org

GenRad 300 BAKER AVENUE, CONCORD, MASSACHUSETTS 01742

-------- formerly General Radio Company --------

ATLANTA
Alabama, Florida, Georgia, Mississippi, North Carolina, South Carolina, Tennessee
1 Dunwoody Park, Suite 107, Atlanta, GA 30341
Telephone: 404 394-5380

*BOSTON
Connecticut, Maine, Massachusetts, New Hampshire, Rhode Island, Vermont
(SALES)
Bolton, MA 01740
Telephone: 617 646-0550
(SERVICE)
300 Baker Avenue, Concord, MA 01742
Telephone: 617 369-8770 • TWX: 710 347-1051

*CHICAGO
Illinois, Iowa, Kansas, Minnesota, Missouri, Nebraska, North Dakota, South Dakota, Wisconsin
9440 West Foster Avenue, Chicago, IL 60656
Telephone: 312 992-0800 • TWX: 910 221-5486

DALLAS
Arkansas, Colorado, Louisiana, New Mexico, Oklahoma, Texas, Wyoming
777 So. Central Expressway, Suite 4-A, Richardson, TX 75080
Telephone: 214 234-3357 • TWX: 910 867-4771

DAYTON
Kentucky, Indiana, Michigan, Ohio, Western Pennsylvania
3300 South Dixie Drive, Dayton, OH 45439
Telephone: 513 294-1500 • TWX: 810 459-1785

*LOS ANGELES
Arizona, Southern California, Hawaii, Nevada (Clark County only)
17361 Armstrong Avenue
Irvine Industrial Complex, Irvine, CA 92714
Telephone: 714 540-9830 • TWX: 910 595-1762

*Service Facilities

*NEW YORK
Delaware, New Jersey, New York, Eastern Pennsylvania
380 Midland Avenue, Saddle Brook, NJ 07662
Telephone: (NJ) 201 791-8990 (NY) 212 964-2722
TWX: 710 988-2205

*SAN FRANCISCO
Northern California, Idaho, Montana, Nevada (except Clark County) Oregon, Washington, Utah
2855 Bowers Avenue, Santa Clara, CA 95051
Telephone: 408 985-0662 • TWX: 910 338-0291
Alaska 907 279-5741

*WASHINGTON, DC
Maryland, Virginia, West Virginia, (Washington, DC)
15 Firstfield Road, Gaithersburg, MD 20760
Telephone: 301 948-7071 • TWX: 710 828-9741

CANADA
*GenRad, Ltd.
307 Evans Avenue, Toronto, Ontario M8Z 1K2
Telephone: 416 252-3395 • TELEX: 06-967624
Montreal 514 747-1052 • **Ottawa** Zenith 88630

EUROPE, AFRICA, and NEAR EAST
*GenRad International AG
P.O. Box CH-8034, Zurich, Switzerland
Telephone: (01) 55 24 20 • TELEX: 854-53638
***Paris** (01) 797 07 39 • ***Milano** (02) 20 92 57
***München** (089) 40 18 01 • ***Bourne End (UK)** (06285) 2 66 11

*ASIA, PACIFIC, and LATIN AMERICA
GenRad, Marketing & International Division
Concord, MA 01742
TWX: 710 347-1051 • TELEX: 92-3354
Cable: GENRADCO CONCORD (Mass)

Printed in USA

File Courtesy of GRWiki.org

File Courtesy of GRWiki.org