INSTRUCTION MANUAL

TYPE 1381

RANDOM-NOISE GENERATOR

2 Hz – 50 kHz

GENERAL RADIO COMPANY

A

File Courtesy of GRWiki.org

Specifications

Spectrum: Flat (constant energy per cycle bandwidth) ±1 dB from 2 Hz to half of upper cutoff frequency. Upper cutoff frequency (3-dB-down point can be switched to 2, 5, or 50 kHz. Upper cutoff slope is 12 dB per octave.

Waveform: Table below shows values of Gaussian probability density function and specifications on amplitude density distribution of the noise generator, as measured in a "window" or 0.2σ, centered on the indicated values:

Voltage	Gaussian Prob. Dens. Function	Amplitude Density Dist. of 1381 Random-Noise Gen.
0	0.0796	0.0796 ±0.005
±σ	0.0484	0.0484 ±0.005
±2σ	0.0108	0.0108 ±0.003
±3σ	0.000898	0.000898 ±0.0002
±4σ	0.0000274	0.0000274 ±0.00002

σ is the standard deviation or rms value of the noise voltage.

Clipping: The noise can be clipped internally to remove the occasional wide extremes of amplitude. Clipping, if desired, is adjustable to approximately 2, 3, 4, or 5σ. Such clipping has negligible effect on the spectrum or the rms amplitude.

Output Voltage: Maximum open-circuit output voltage is at least 3V, rms, for any bandwidth.

Spectral Level: At 3V output, spectral level is approximately 64, 40, and 13 mV in a 1-Hz bandwidth for upper cutoff frequencies of 2, 5, or 50 kHz, respectively.

Output Impedance: 600 ohms, unbalanced, shortable without causing distortion.

Amplitude Control: Output amplitude is continously adjustable from full output to approximately 60 dB below that level.

Power Required: 6W at 100 to 125 V, or 200 to 250 V, 50 to 400 Hz.

Weight:
Net — 5 lb (2.3 kg)
Shipping — 8 lb (3.8 kg)

General Radio Experimenter Reference: Vol. 42, No. 1, Jan, 1968

File Courtesy of GRWiki.org

Contents

Section 1 INTRODUCTION 1

1.1 Purpose 1
1.2 Description 2
1.3 Controls and Connectors 2
1.4 Accessories Supplied 3
1.5 Accessories Available 3

Section 2 INSTALLATION 5

2.1 Dimensions 5
2.2 Bench Mounting 6
2.3 Relay-Rack Mounting 6
2.4 Connecting the Power 7

Section 3 PROPERTIES OF RANDOM NOISE 9

3.1 Definitions 9
3.2 Description of Random Noise 9
3.3 Amplitude Distribution 10
3.4 Spectrum 11
3.5 Stationarity 12
3.6 Summary 13

Section 4 PRINCIPLES OF OPERATION 15

4.1 Description of Circuit 15

Section 5 OPERATING PROCEDURE 17

5.1 General . . . . . .
5.2 Bandwidth Control 17
5.3 Clipping Control 18
5.4 Output Level Control 18
5.5 Output Connections 18
5.6 Use of Auxiliary Equipment to Modify Output 18
5.7 Generating Two Partially Correlated Random-Noise Signals . . . 19

Section 6 APPLICATIONS 21

6.1 General 21
6.2 Use of Noise in Electrical Testing 22
6.3 Use of Noise in Acoustical and Psychoacoustical Testing 23
6.4 Vibration Testing 23
6.5 Demonstrating Statistical Properties 23

Section 7 SERVICE AND MAINTENANCE 25

7.1 Warranty 25
7.2 Service 25
7.3 Minimum Performance Standards 25
7.4 Trouble Analysis 26
7.5 Recalibration 26
7.6 Knob Removal 27
7.7 Knob Installation 27
7.8 Pilot-Lamp Removal 27

SCHEMATIC 29

PARTS LIST 30

File Courtesy of GRWiki.org

Section 1–Introduction

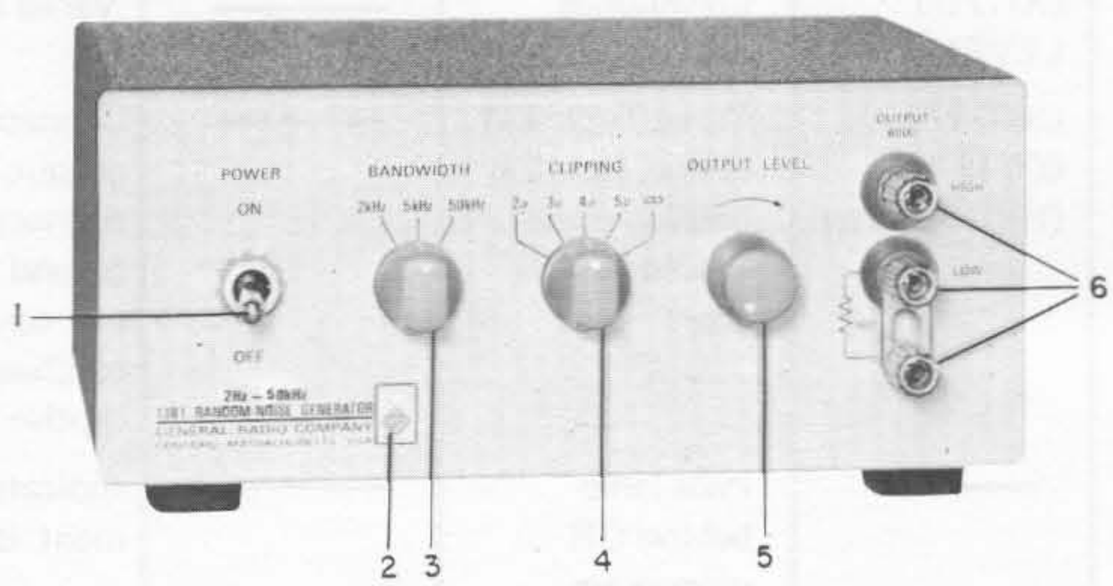

Figure 1-1.
Type 1381 Random-Noise Generator (2 Hz to 50 kHz).

1.1 PURPOSE.

The Type 1381 Random-Noise Generator (Figure 1-1) provides a high level of electrical noise at its output terminals. This type of signal is useful in room-acoustics studies, loudspeaker and microphone tests, psychoacoustic tests, filter tests, crosstalk measurements, calibration checks on recording systems, modulation of signal generators and test oscillators, shaker-driven vibration tests, and airborne vibration tests. It can also be used for tests of the rms response of meters, observation of resonances in systems, electrical averaging of resonant responses, comparisons of effective bandwidths, and for other tests when a signal with a high peak-to-rms factor is useful, as in overload testing. The low-frequency range of the 1381 Random-Noise Generator makes it particularly suitable for measurements when a flat spectrum down to 2 Hz is necessary. A pair of these generators can be used as signal sources for demonstrations of various degrees of correlation, possible errors of random sampling, and other concepts of statistical theory.

A companion instrument, the Type 1382 Random-Noise Generator, produces three different spectra of noise in the audio-frequency range, including white noise and pink noise. It is designed for floating, balanced or single-sided output.

File Courtesy of GRWiki.org

1.2 DESCRIPTION.

The 1381 Random-Noise Generator consists of a semiconductor noise source, with all-semiconductor amplifiers and power supply.

1.3 CONTROLS AND CONNECTORS.

The controls and connectors on the front and rear panels of the 1381 Random-Noise Generator are listed and described in Tables 1-1 and 1-2 respectively.

Two jack-top binding posts, used as OUTPUT terminals, are provided on the front panel. A third binding post, located 3/4 inch below the LOW post, is connected to the case of the instrument and offers a connection for the ground wire of the power cord. The BNC connector at the rear of the instrument is in parallel with the OUTPUT binding posts on the front panel.

TABLE 1-1
Controls, Connectors, and Indicators on the front panel.

FIGURE 1-1 REF.	NAME	TYPE	POSITIONS	FUNCTION
1	POWER	2-position toggle switch	OFF, POWER	Energizes instrument.
2	BANDWIDTH	3-position rotary selector switch	2 kHz, 5 kHz, 50 kHz	Selects upper cutoff frequency of noise spectrum.
3	CLIPPING	5-position rotary selector switch	2σ, 3σ, 4σ, 5σ, ∞	Selects level at which noise is clipped. (No clipping in ∞ position.)
4	OUTPUT LEVEL	Continuous rotary control	———	Varies output voltage.
5	OUTPUT 600 Ω (HIGH—LOW)	Three Type 938 in-line, jack-top binding posts spaced ¾ inch apart	———	Connection to generator output. LOW post is connected to chassis ground by 10 ohms but can be shorted to chassis ground by captive link.
6	———	Pilot lamp behind GR monogram	———	Indicates when instrument is energized.

TABLE 1-2
Controls and connectors on the rear panel.

FIGURE 1-2 REF.	NAME	TYPE	POSITIONS	FUNCTION
1	OUTPUT	BNC jack	———	Connection to generator output; in parallel with front-panel OUTPUT terminals.
2	FUSE, 0.1 A	Extraction-post fuse holder	———	Holds 0.1-A fuse (Slo—Blo).
3	———	Screwdriver-operated slide switch	100—125, 200—250	Selects proper range of line voltage.
4	———	3-terminal male connector	———	Line-power input connection.

File Courtesy of GRWiki.org

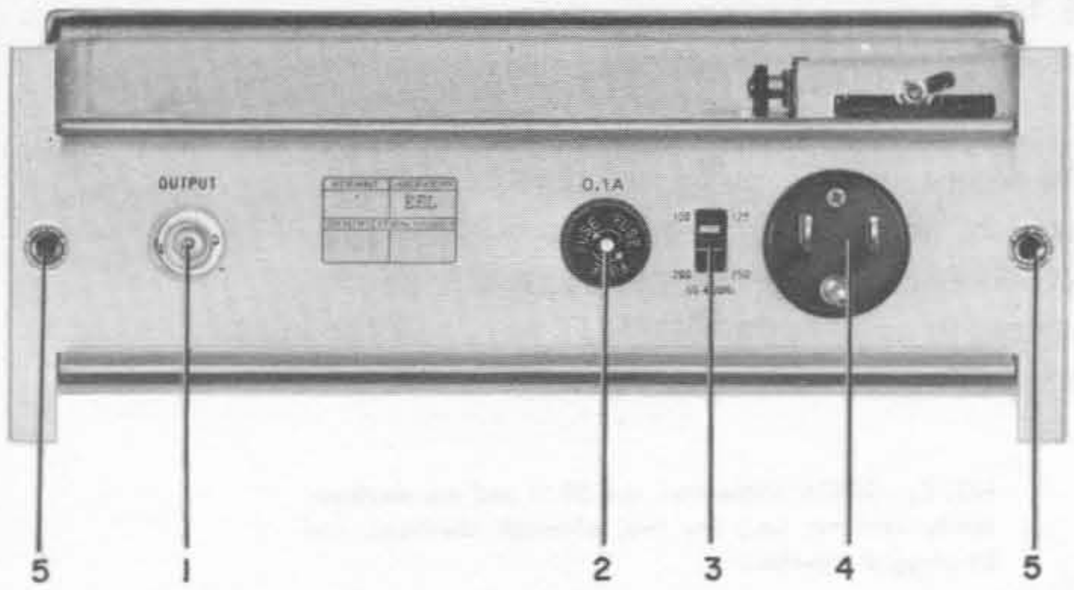

Figure 1-2.
Rear panel of the Generator, showing controls and connectors.

1.4 ACCESSORIES SUPPLIED.

The accessories supplied with the Generator are listed in Table 1-3.

TABLE 1-3
Accessories Supplied.
(Refer also to Parts List.)

	ITEM	GR PART NO.
1	Power Cable, 7-foot, 3-wire	4200-9622
1	Spare Fuse (0.1 A, Slo-Blo)	5330-0400

1.5 ACCESSORIES AVAILABLE.

A Rack Adaptor Set (P/N 0480-9722) is available to convert the portable bench model for mounting in an EIA standard 19-inch relay rack (refer to paragraph 2.3). Also available are various patch cords (refer to Table 1-4) for making connections to the OUTPUT terminals.

File Courtesy of GRWiki.org

TABLE 1-4

Available patch cords and adaptors for output connections.

The front-panel OUTPUT binding posts accept banana plugs, standard telephone tips, alligator clips, crocodile clips, spade terminals, and all wire sizes up to number 11. The rear-panel OUTPUT jack is a female BNC connector. A wide variety of GR patch cords is available, as well as a full line of adaptors to convert the OUTPUT terminals for use with most commercial and military coaxial connectors.

NOTE: GR874 connectors are 50 Ω and are mechanically sexless; i.e., any two, although identical, can be plugged together.

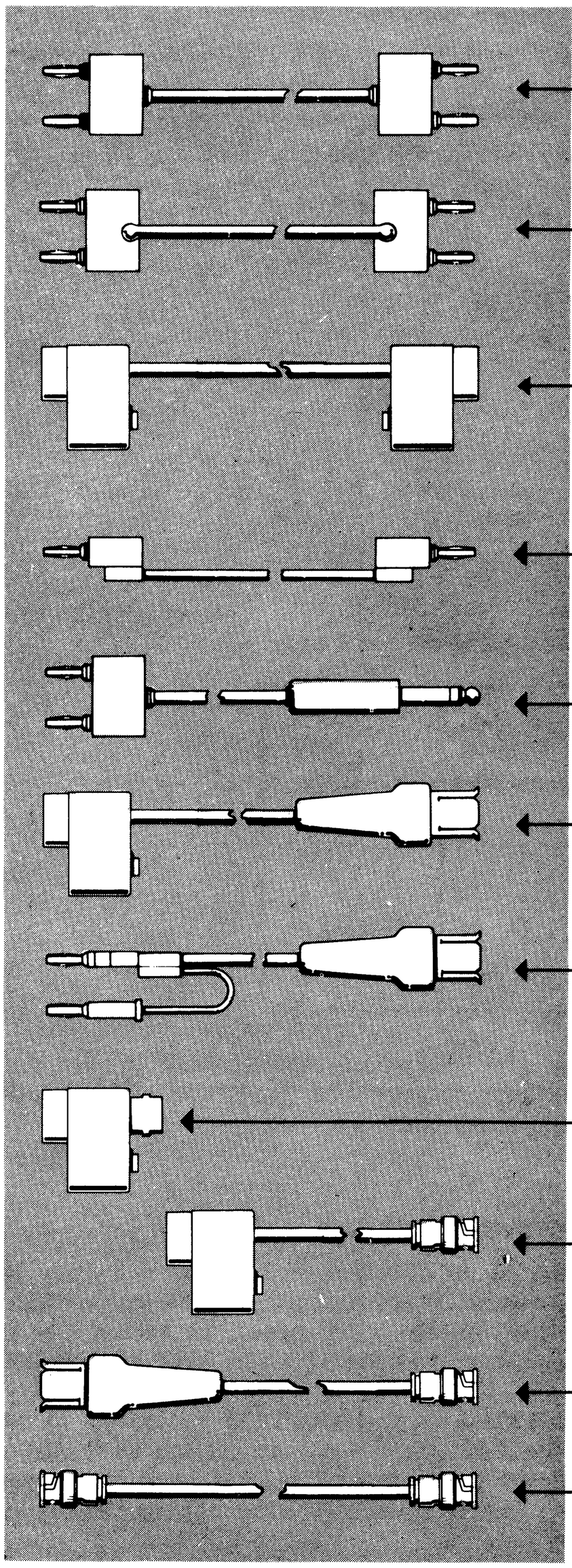

TYPE NO.	DESCRIPTION	CATALOG NO.
274-NQ	Double-plug patch cord, in-line cord, 36" long	0274-9860
274-NQM	Double-plug patch cord, in-line cord, 24" long	0274-9896
274-NQS	Double-plug patch cord, in-line cord, 12" long	0274-9861
274-NP	Double-plug patch cord, right-angle cord, 36" long	0274-9880
274-NPM	Double-plug patch cord, right-angle cord, 24" long	0274-9892
274-NPS	Double-plug patch cord, right-angle cord, 12" long	0274-9852
274-NL	Shielded double-plug patch cord, 36" long	0274-9883
274-NLM	Shielded double-plug patch cord, 24" long	0274-9882
274-NLS	Shielded double-plug patch cord, 12" long	0274-9862
274-LLB	Single-plug patch cord, black, 36" long	0274-9468
274-LLR	Single-plug patch cord, red, 36" long	0274-9492
274-LMB	Single-plug patch cord, black, 24" long	0274-9847
274-LMR	Single-plug patch cord, red, 24" long	0274-9848
274-LSB	Single-plug patch cord, black, 12" long	0274-9849
274-LSR	Single-plug patch cord, red, 12" long	0274-9850
1560-P95	Adaptor cable, double-plug to telephone plug, 36" long	1560-9695
874-R34	Coaxial patch cord, double plug to GR874, 36" long	0874-9692
874-R33	Coaxial patch cord, two plugs to GR874, 36" long	0874-9690
274-QBJ	Adaptor, shielded double plug to BNC	0274-9884
776-A	Patch cord, shielded double plug to BNC	0776-9701
776-B	Patch cord, GR874 to BNC	0776-9702
776-C	Patch cord, BNC to BNC	0776-9703

File Courtesy of GRWiki.org

Section 2–Installation

2.1 DIMENSIONS.

The dimensions of the 1381 are shown in Figure 2-1.

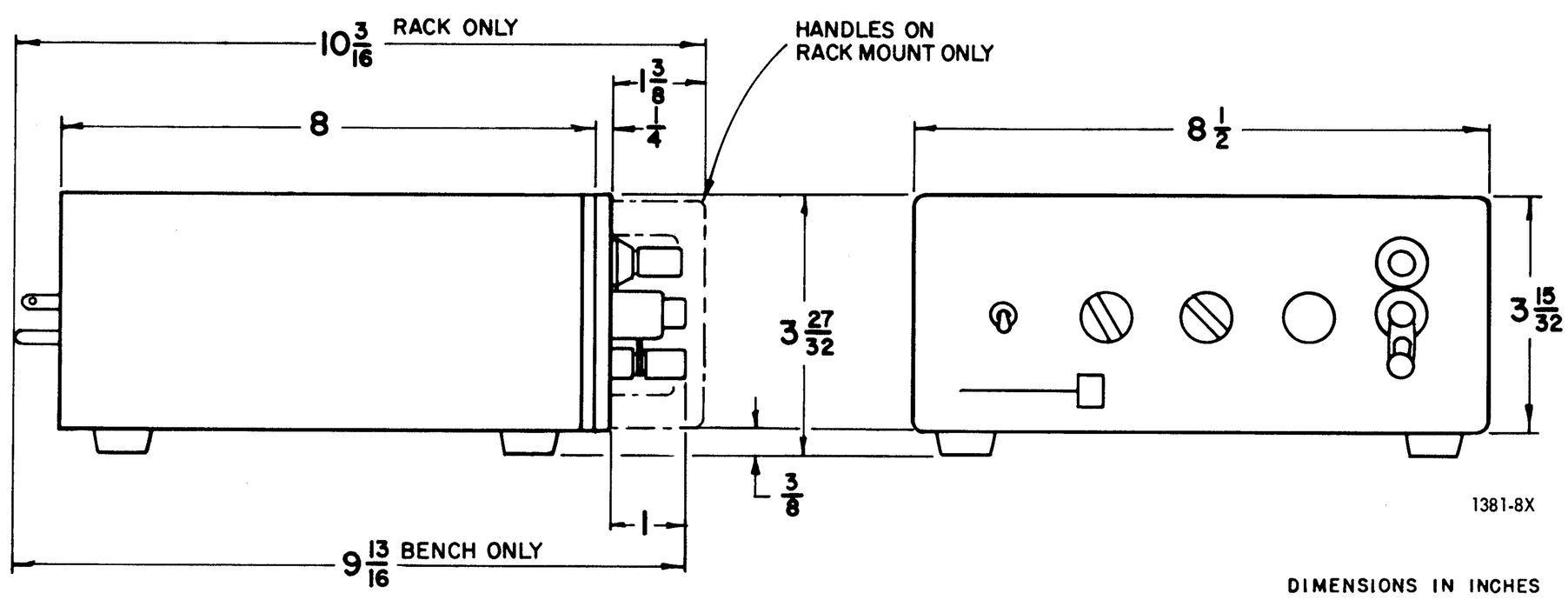

Figure 2-1.
Dimensions of the Generator.

File Courtesy of GRWiki.org

2.2 BENCH MOUNTING.

The 1381 Random-Noise Generator is delivered completely assembled in a metal cabinet, ready for bench use. A convenient bail, located between the front feet, can be pulled down to raise the front of the instrument and provide a better view of the control settings.

2.3 RELAY-RACK MOUNTING.

2.3.1 Single Instrument and Blank Panel (Figure 2-2).

Rack Adaptor Set (P/N 0480-9722) is available to convert the portable bench model for use in an EIA standard 19-inch relay rack. Table 2-1 lists the parts included in the Rack Adaptor Set. The conversion procedure is as follows (see Figure 2-2):

a. Loosen the two captive 10/32 screws (5, Figure 1-2) in the rear of the cabinet until the instrument is free; slide the instrument forward, out of the cabinet.

b. Remove the four rubber feet from the cabinet. Simply push out the two rear feet. Spread the bail (A, Figure 2-2) slightly and the two front feet (B) and the bail will drop out. Be sure to save all parts as they are removed for possible reconversion of the instrument to bench mounting.

c. Pierce and push out the plugs from the four bosses (C) on the inner sides of the cabinet, near the front. Do not damage the threads in the threaded holes.

d. Press the subpanel (D) into the blank panel (E), to form a liner for the latter.

e. Attach the short flange of the blank panel to the front of the cabinet (on either side of the cabinet, as desired) using two 5/16-inch screws (F). Note that the screws enter in opposite directions — one from inside the cabinet and one from the flange side, as shown.

f. Pierce and push out the plug in the lower rear boss (G) on the side toward the blank panel only, as shown.

g. Attach one end of the support bracket (H) to the lower rear boss. The bracket must be placed so that the screw passes through a clearance hole, into a tapped hole. Lock the bracket in position with a 5/16-inch screw (J).

h. Attach the other end of the support bracket to the lower, rear hole in the wide flange, as shown, using a 5/16-inch screw (K).

i. Attach one Rack Adaptor Assembly (handle) to the side of the cabinet opposite the blank panel, using two 5/16-inch screws (L). Again, note that the screws enter in opposite directions, one from inside the cabinet and one from outside. Use the upper and lower holes in the Assembly.

j. Attach the other Rack Adaptor Assembly (handle) to the wide flange on liner (D) and the flange on the blank panel (E). Use two 5/16-inch screws (M) through the two holes in the flange that are nearest the panel and through the upper and lower holes in the Assembly. Again, the screws enter in opposite directions.

k. Install the instrument in the cabinet and lock it in place with the two captive screws through the rear panel that were loosened in step a.

l. Place a straight edge across both the instrument panel and the blank panel. Loosen the screw (J) through the slot in the support bracket (H). Exert a slight pressure on the blank panel (E) so that it forms a straight line with the instrument panel, and tighten the screw (J) in the bracket, to lock the panels in this position.

m. Slide the entire assembly into the relay rack and lock it in place with the four 9/16-inch screws (N) with captive nylon cup washers. Use two screws on each side and tighten them by inserting a screwdriver through the holes (P) in the handles.

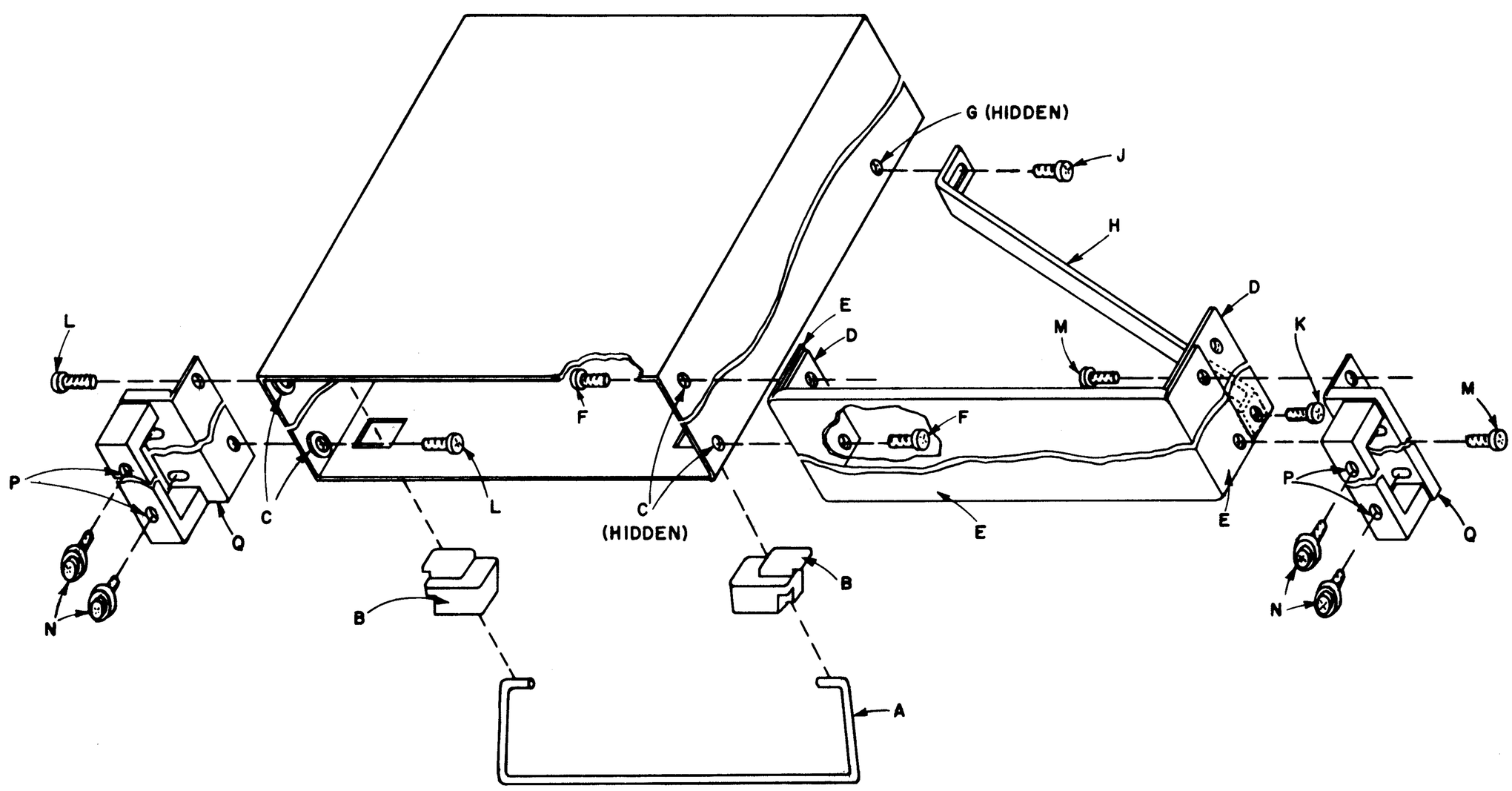

Figure 2-2.
Method of mounting the generator and a blank panel in a relay rack.

File Courtesy of GRWiki.org

2.3.2 Reconverting to Portable Bench Mounting.

To reconvert the instrument for bench use, reverse the procedures of paragraph 2.3.1, first removing the entire assembly of instrument, cabinet, and blank panel from the rack. Next remove:

a. The instrument from its cabinet.

b. The support bracket (H) from the cabinet (see Figure 2-2).

c. The blank panel (E) (with handle attached) from one side of the cabinet.

d. The Rack Adaptor Set (handle) from the other side of the cabinet.

Push the two rear feet into the cabinet; slide the bail (A) and two front feet (B) into place. Install the instrument in its cabinet and lock it in place with the two captive screws through the rear panel (see Figure 1-3).

2.3.3 Rack-mounting Two Instruments.

Two instruments of the same panel size (such as two 1381's or one 1381 and one 1382) can be mounted side-by-side in a standard 19-inch relay rack. Use the procedure of paragraph 2.3.1, substituting the second instrument for the blank panel. Do not use the support bracket (H, Figure 2-2), but insert three screws through the bosses in the adjacent sides of the cabinets, two near the front (C) and one near the rear (G). The four feet and the bail must, of course, be removed from each cabinet. Use the four screws (N) with nylon washers to lock the instruments in the rack. The required hardware is listed below:

3 Screws, BH 10-32 5/16 P/N7080-0800
4 Screws, BH 10-32, 9/16 with nylon washers P/N7207-6310

2.4 CONNECTING THE POWER.

The wiring of the power transformer can be switched, by means of the 2-position slide switch (3, Figure 1-2) on the rear panel, to accept 50- to 400-Hz line power of either 100-125 volts or 200-250 volts.

Connect the 3-wire power cable (P/N 4200-9622) supplied to the line and to the 3-terminal male connector (4, Figure 1-2) on the rear panel. A single 0.1-A fuse is used for either line voltage. Power consumption is approximately 6 W.

TABLE 2-1
PARTS INCLUDED IN THE RACK ADAPTOR SET,
P/N 0480-9722 (see Figure 2-2).

Fig. 2-2 Ref.	No. Used	Item	GR Part No.
E	1	Blank Panel	0480-8932
D	1	Sub-Panel	0480-8952
—	2	Rack Adaptor Assembly	0480-4902
H	1	Support Bracket	0480-8524
—	1	Hardware Set	0480-3080
		includes	
F, J, K, L, M,		8 Screws, BH 10-32, 5/16"	7080-0800
N		4 Screws, BH 10-32, 9/16"	7270-6310
		w. nylon cup washers	

File Courtesy of GRWiki.org

File Courtesy of GRWiki.org

Section 3—Properties of Random Noise

3.1 DEFINITIONS.

The acoustical term "noise" was applied originally to certain electrical signals because of the undesirable audible effects they produced at the output of radio receivers. Noise, in the electrical sense, is now a broad term that means any unwanted signal, and therefore can include not only input-stage noise and atmospheric noise in radio receivers, but also crosstalk, hum, and distortion.

Random noise is a signal whose exact value at any future moment cannot be predicted. It is even a little more than that; it means a signal containing no periodic component whose future value can be predicted. Unlike periodic signals, whose spectra consist of one or more discrete lines corresponding to the various frequency components, random noise has a spectrum that is a continuous function of frequency, containing no discrete line components.

3.2 DESCRIPTION OF RANDOM NOISE.

It is only possible to describe random noise in terms of its average properties that cannot be measured instantaneously but must be averaged over some finite measurement time. The two most important characteristics of random noise are its amplitude distribution and its spectrum.

File Courtesy of GRWiki.org

3.3 AMPLITUDE DISTRIBUTION.

3.3.1 Amplitude Distribution Functions.

The instantaneous value of a random noise, at some particular instant, cannot be predicted, but for many noises we can speak of the probability that the voltage will lie in some particular range. This probability is given by a function called the amplitude density distribution, p(v). When multiplied by a voltage increment, dv, this function gives the probability that, at any given instant, the voltage lies between v and v + dv. Because the voltage must exist at some value, it follows that the integral

$$\int_{-\infty}^{\infty} p(v)dv = 1.$$

Another useful probability function is the integral over part of that range, called the amplitude distribution, P(v), defined as

$$P(v) = \int_{-\infty}^{v} p(x)dx.$$

Thus defined, P(v) is the probability that the voltage, at any given instant, lies below the value v. The values of these probability functions lie on a scale between 0 and 1, with 1 denoting certainty. A probability of 0.5 denotes a 50% chance of occurance.

3.3.2 The Gaussian Distribution.

The Gaussian or normal distribution is particularly important for several reasons: It describes the "normal" occurrance of random measurement errors in experiments. The amplitude of thermal noise in a resistance and shot noise in a vacuum tube are Gaussianly distributed. The distribution of the sum of many independent time-varying voltages approaches the Gaussian distribution in the limit as the number of such voltages is increased, regardless of the distribution of the individual voltages (derived from the Central Limit Theorem of statistics). An extension of this reasoning leads to the result that filtering that reduces the bandwidth generally makes a non-Gaussian noise more Gaussian, so that, in this sense, the Gaussian is a stable distribution. For these reasons, the Gaussian distribution is of fundamental importance and is the most appropriate distribution of random noise in most experiments. For the Gaussian distribution,

$$p(v) = \left(\frac{1}{\sigma\sqrt{2\pi}}\right) e^{-\frac{v^2}{2\sigma^2}}$$

and

$$P(v) = \frac{1}{2}\left[1 + \text{erf}\left(\frac{v}{\sigma\sqrt{2}}\right)\right]$$

where σ is the root-mean-square voltage (in statistics, the standard deviation), and erf denotes the error function. Values of these functions are given in Table 3.1 and the functions are graphed in Figures 3.1 and 3.2.

TABLE 3-1
Gaussian amplitude distribution functions.

v	p(v)	P(v)
-5σ	.000 001 487/σ	.000 000 287
-4σ	.000 133 8/σ	.000 031 67
-3σ	.004 432/σ	.001 350
-2σ	.053 99/σ	.022 75
-1σ	.241 97/σ	.158 65
0	.398 94/σ	.500 00
1σ	.241 97/σ	.841 34
2σ	.053 99/σ	.977 25
3σ	.004 432/σ	.998 650
4σ	.000 133 8/σ	.999 968 33
5σ	.000 001 487/σ	.999 999 713

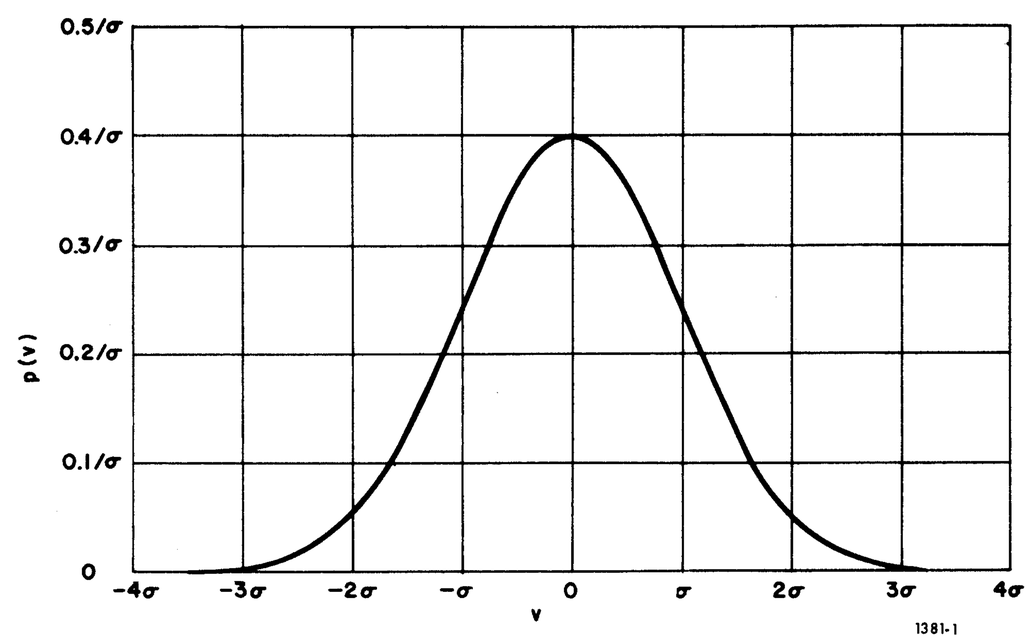

Figure 3-1.
The Gaussian probability density function plotted as a function of σ, the root-mean-square amplitude.

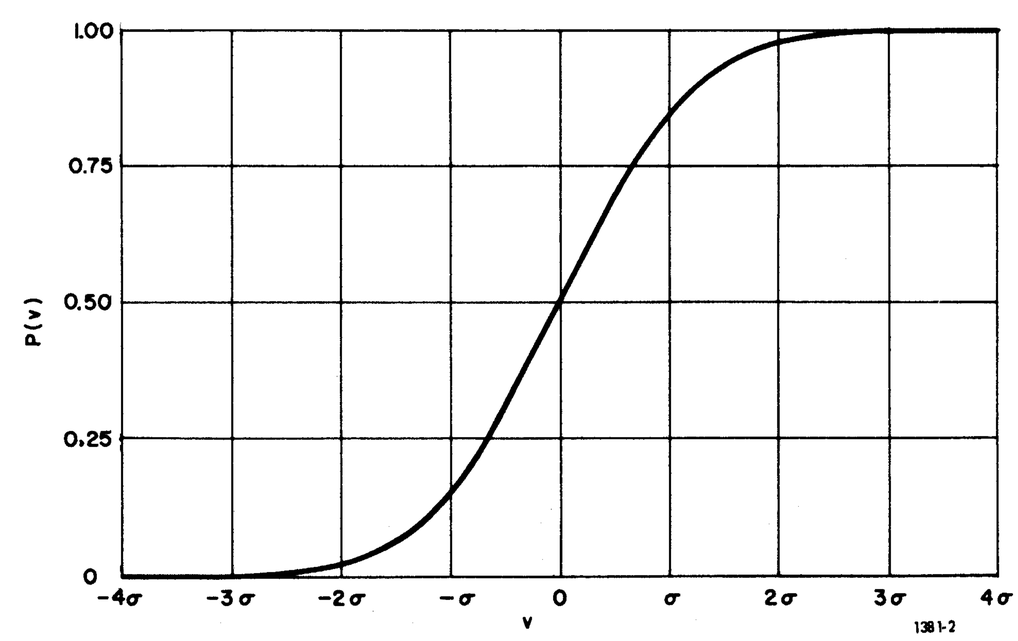

Figure 3-2.
The Gaussian probability distribution function plotted as a function of σ, the root-mean-square amplitude.

It can be seen from Figure 3.2 that a Gaussianly distributed random noise lies below its positive root-mean-square value (σ = 1) 84% of the time, and therefore exceeds that value only 16% of the time.

File Courtesy of GRWiki.org

3.3.3 Importance of Knowing the Distribution.

Knowledge of the amplitude distribution of a noise is important in measuring its magnitude. Electronic voltmeters respond to different measures of the amplitude of the voltage, such as the rms, the peak, or the (full-wave-rectified) average. The peak and average values of various waveforms having 1-volt, rms, amplitude are given in Table 3-2. A voltmeter responding to the average and calibrated to indicate the rms value of a sine wave will, when measuring Gaussian noise, indicate a value that is low by the factor 0.798/0.900 = 0.887 (-1.05 dB)[1]. Voltmeters that respond to the true rms value are quite appropriate for the measurement of noise, because they can indicate the rms value without correction, regardless of the amplitude distribution. The response of a peak-indicating voltmeter is dependent upon the charging and discharging time constants of its rectifier circuits; when random noise is measured, each may indicate a different value. The response time of a rectified-average-responding voltmeter is usually shorter than that of the true rms voltmeter. Therefore, for measuring the amplitude of Gaussianly-distributed noise, the average-responding voltmeter is probably the most convenient (using the necessary correction factor). In order to measure the rms of non-Gaussian noise, or to make the measurement with no correction factor, it is necessary to use a true-rms instrument.

TABLE 3-2
Rms, peak, and full-wave rectified average voltage values of various waveforms.

	RMS	PEAK	FULL-WAVE RECTIFIED AVERAGE
Sine Wave	1.0	1.414 ($\sqrt{2}$)	0.900 $\left(\frac{2\sqrt{2}}{\pi}\right)$
Square Wave	1.0	1.0	1.0
Gaussian Noise	1.0	∞	0.798 $\left(\sqrt{\frac{2}{\pi}}\right)$

3.3.4 Measuring Amplitude Distribution.

The amplitude distribution, P(v), can be measured by means of a circuit that measures the percentage of time during which the noise voltage exceeds (or does not exceed) the voltage level, v. Apparatus for this purpose generally includes some form of level-crossing detector,and, for high-speed operation, Schmitt-circuit wave-shapers. The measurement must be made by averaging over a time long enough to smooth the fluctuations in the indication to negligible size.

The amplitude density distribution, p(v), can be measured by similar, but somewhat more complicated, apparatus that indicates the percentage of time that the noise voltage exists within the range from v to (v + dv). In making any of these measurements, averaging is important, bacause only the average characteristics of the noise can be measured meaningfully.

[1] This and much other information concerning random noise is contained in a General Radio publication, "Useful Formulas, Tables and Curves for Random Noise", Instrument Note IN-102 (June, 1963). A copy of this six-page compendium can be obtained free of charge by writing to General Radio, West Concord, Mass. 01781.

3.3.5 Amplitude Distribution of the Type 1381.

Care has been taken to ensure that the amplitude distribution of the noise generated by the Type 1381 Random-Noise Generator is truly Gaussian. The output amplifier has been designed so that clipping cannot occur below 4σ at full output, and below even higher values of σ as the output is reduced. Special attention has been given to the symmetry of the distribution.

A CLIPPING control on the front panel permits the amplitude distribution to be deliberately cut off at various values of σ, for use in those cases where it is desirable to limit the occasional extremes of voltage amplitude, as when the generator is used to drive power amplifiers, loud speakers, or shaker systems. Because the fraction of time in which the noise voltage exceeds 2σ is very small, such clipping has an almost unnoticeable effect upon the over-all amplitude of the noise.

3.4 SPECTRUM.

3.4.1 General.

The spectrum of a random signal is different from that of a periodic signal, which is composed of one or more discrete lines, each of which corresponds to a frequency component of the periodic signal. A truly random signal contains no periodic frequency components, and has a spectrum that is a continuous function of frequency.

3.4.2 Spectrum Functions.

The frequency content of a random noise is described by a function called the spectral intensity, which has the dimensions of voltage squared per unit bandwidth. (When divided by a value of resistance, it is equal to the power that voltage would dissipate in that resistance, per unit bandwidth). The spectral intensity is the Fourier transform of the autocorrelation function, and is the spectrum function most often used in mathematical analysis of random noise. It is not the most convenient function for practical use, however, because spectra are usually measured as voltage, rather than voltage squared, in a given bandwidth, and filter responses, used in shaping noise spectra, are usually measured as voltage functions. Therefore, for practical use, we define the voltage spectrum as numerically equal to the square root of the spectral intensity. It has units of voltage per square root of bandwidth, but may be spoken of as voltage in a given bandwidth. Spectra shown in Figure 3-3 are plotted as voltage spectra.

3.4.3 White Noise.

Noise whose spectral intensity is constant over a range of frequencies is called white noise, by analogy with white light, which contains more or less equal intensities of all visible colors.[2] White noise cannot contain equal amplitudes at all

[2] Although, as Bennett (op. cit., p. 14) points out, the analogy has been drawn incorrectly, because spectroscopists were measuring intensity as a function of wavelength, and found it to be substantially constant per unit wavelength, not per unit frequency.

File Courtesy of GRWiki.org

frequencies, for then the total power in the noise would be infinite. White noise, therefore, means that the spectrum is flat over the range of interest, for example, throughout the audio-frequency range. Because of its flat spectrum, white noise is particularly convenient as a starting point for many experiments.

3.4.4 Importance of Knowing the Spectrum.

In most experiments involving random noise, knowledge of the spectrum of the noise being used is vitally necessary. When noise is used as a driving-point signal to determine the response of some system, the response is meaningful only when the input spectrum is known, and is usually most conveniently studied when the input spectrum is flat. There are, of course, cases where other spectra are more convenient. If, in such cases, a filter can be constructed whose response has the shape of the desired spectrum, white noise is the proper input for that filter to produce the desired spectrum at its output.

3.4.5 Noise-Spectra Measurements.

The spectrum of a noise can be measured with any wave analyzer whose frequency range is appropriate. For the output indication to be free of fluctuations that might cause reading errors, the product of analysis bandwidth and the averaging time must be large. As in the measurement of the amplitude distribution, the spectrum can only be measured accurately by averaging over a relatively long time interval.

Wave analyzers generally indicate the voltage in the analysis passband. The indication is therefore proportional to w(f), not W(f). It is convenient to reduce all measurements to a common bandwidth basis, and the most-often-used bandwidth is one cycle. Units for W(f) are "volts squared per cycle bandwidth," and considerable use has been made of the unit "volts per root-cycle" for w(f). Now that "cycles" have become "hertz," this term is even more cumbersome, and is perhaps best replaced by "volts in a 1-hertz band."

In order to convert to volts in a 1-hertz band, it is necessary to divide the voltage indication of the analyzer by the square root of the analysis bandwidth. For example, using the General Radio Type 1900 Wave Analyzer, multiply by the factors given in Table 3-3 to convert measured values of random noise to volts in a 1-hertz band.

TABLE 3-3
Correction factors for converting voltage indication of the Type 1900 Wave Analyzer to voltage in a 1-hertz band.

ANALYZER BANDWIDTH	CORRECTION FACTOR[1]
3 Hz	0.650 (-3.7 dB)
10 Hz	0.357 (-9.0 dB)
50 Hz	0.159 (-15.9 dB)

[1]These numbers include the correction for the average-responding voltmeter in the 1900 Wave Analyzer.

In a constant-percentage-bandwidth analyzer, the analysis bandwidth is directly proportional to the center frequency of the pass band. This necessitates dividing the voltage indication by the square root of the frequency as well as by the correction factor for the fractional bandwidth itself. When using constant-percentage-bandwidth analyzers, such as the General Radio Type 1564 Sound and Vibration Analyzer or the Type 1558 Octave-Band Analyzer, multiply the analyzer voltage indication by the appropriate conversion factor in Table 3-4.

TABLE 3-4
Correction factors for converting voltage indication of a constant-percentage-bandwidth analyzer to voltage in a 1-hertz band.

BANDWIDTH	CORRECTION FACTOR
1/10 Octave	$3.80/\sqrt{f}$
1/3 Octave	$2.08/\sqrt{f}$
1 Octave	$1.19/\sqrt{f}$

3.4.6 Spectrum of the Type 1381.

The spectrum of the Type 1381 Random-Noise Generator is flat over three different frequency ranges. The voltage spectrum is flat within 1 dB for frequencies above 2 Hz and typically rolls off less than 3 dB at 1 Hz. The upper cutoff frequency, where the voltage spectrum has rolled off 3 dB, is adjustable to either 2, 5, or 50 kHz. The spectrum is flat within ±1 dB at frequencies below half the upper cutoff frequency. Voltage spectra are shown in Figure 3-3. The total output voltage is the same for the different bandwidths, so the spectral level is higher for the narrower bandwidths.

Clipping, if it is used, has negligible effect on the spectrum, merely transferring a small amount of energy to higher frequencies.

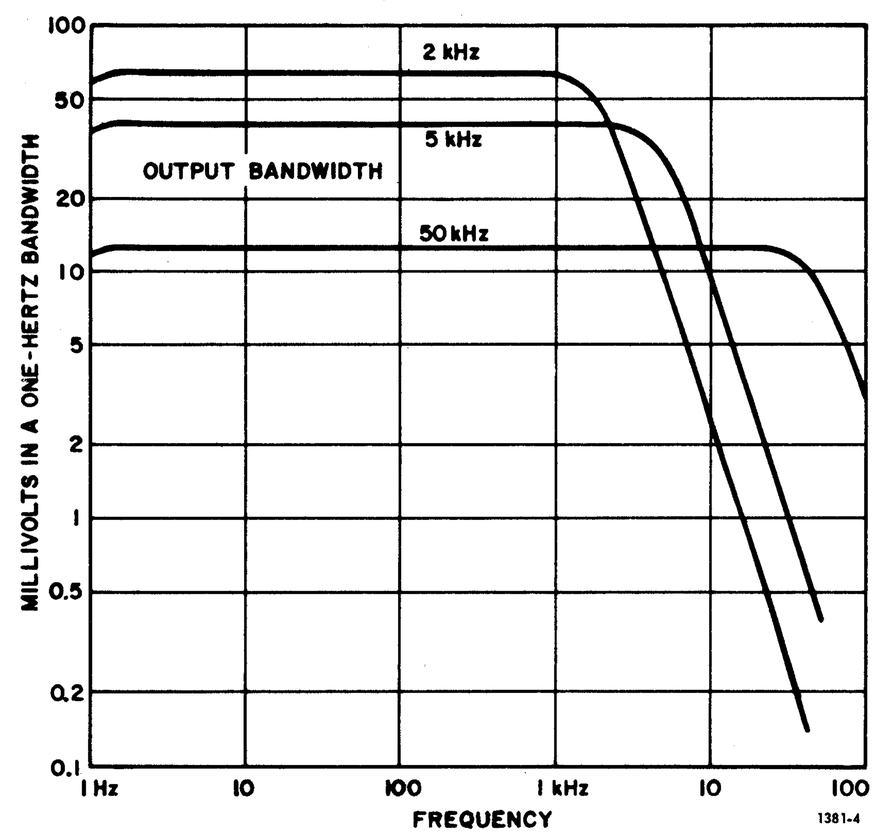

Figure 3-3.
Voltage spectra of the 1381 for the three output bandwidths at 3 volts, rms, output level.

3.5 STATIONARITY.

A random noise is said to be stationary[3] if its various statistical parameters such as the amplitude distribution and the spectral intensity do not change with time. Random noise,

[3]Bennett, op. cit., p. 52–54.

File Courtesy of GRWiki.org

of course, never repeats the same pattern from one moment to the next, but, if it is stationary, many measurements of the spectrum made at different times will all indicate the same result, except for the unavoidable errors of measuring a random quantity in a finite time. In discussing tests for stationarity, Bendat and Piersol[4] point out that, for most noise-generating processes, it is sufficient to determine that the mean and the variance (square of the standard deviation, σ) do not change with the time at which they are measured. Because the output of the 1381 is ac coupled, the mean is automatically zero, and it is only necessary to observe the rms amplitude to prove stationarity. This can be done by seeing that the fluctuations in long-time recordings of the amplitude of the noise are no greater than the value predicted from the bandwidth of the noise and the smoothing time of the detector.

Tests of this type have been applied to the 1381 and no departure from stationarity is detectable. The importance of stationarity in a random noise generator is analogous to stability of an oscillator; the user is assured that there is no change in the spectrum or the amplitude distribution during the course of the experiment.

3.6 SUMMARY.

Because various terms used in speaking of random noise are sometimes confused, a summary is presented here of the most-often-used words, together with a brief explanation of their meaning: "Noise" is any unwanted signal. "Random noise" is a signal whose future value cannot be exactly predicted and that does not contain any periodic components. To differentiate clearly between the spectrum and the amplitude distribution, in this book the word "density" is used only in connection with the amplitude distribution. The word "intensity" is used only in connection with the spectrum. "Gaussian" applies only to the amplitude distribution and refers to a particular theoretical distribution. "White" refers only to the spectrum, and means that the spectral intensity is constant over some range of interest.

BIBLIOGRAPHY

1. Bennett, W. R., *Electrical Noise*, McGraw-Hill Book Co., Inc., New York (1960).

2. Peterson, A. P. G., "Response of Peak Voltmeters to Random Noise," *General Radio Experimenter*, 31, No. 7, December, 1956, p 3–8.

3. Hilibrand, J., "Characterization of Probability Distributions for Excess Physical Noises," Research Laboratory of Electronics, Massachusetts Institute of Technology, Cambridge, Mass., *Technical Report 276*, September 7, 1956.

4. Bendat, J. S. and Piersol, A. G., *Measurement and Analysis of Random Data*, John Wiley & Sons, Inc., New York, 1966, pp 219–223.

5. American Standards Association (now United States of America Standards Institute), *American Standard Specification for General-Purpose Sound Level Meters, Standard S1.4, 1961*, New York.

6. MIL-STD-188B, U. S. Army Electronics Command, Fort Monmouth, New Jersey.

7. Beranek, L. L., *Acoustic Measurements*, John Wiley & Sons, Inc., New York, 1949.

8. Holtje, M. C., and M. J. Fitzmorris, "A Graphic Level Recorder with High Sensitivity and Wide Ranges," *General Radio Experimenter*, Vol 33, No. 6, June, 1959.

9. A useful bibliography for these applications is: S. S. Stevens, J. G. S. Loring, and Dorothy Cohen, *Bibliography on Hearing*, Harvard University Press, Cambridge, 1955, particularly those references listed in Sections 139 (p 571), 157 (p 573), and 222–228 (pp 579 f).

10. Faran, J. J., Jr., and R. Hills, Jr., *The Application of Correlation Techniques to Acoustics Receiving Systems*, Acoustics Research Laboratory, Harvard University, Cambridge, Mass., Technical Memorandum No. 28, November, 1952.

11. Crandall, S. H., editor, *Random Vibration, Volume 2*, The M.I.T. Press, Massachusetts Institute of Technology, Cambridge, Mass., 1963.

12. General Radio Co., "Distribution of Random Noise Voltages," *Experiments for the Student Laboratory*, No. STX-104, January, 1967. (Copies of this publication may be obtained free of charge from the General Radio Co., W. Concord, Mass., 01781.)

13. General Radio Co., "Useful Formulas, Tables, and Curves for Random Noise," *Instrument Notes, No. IN-103*, June, 1963. (Copies of this publication may be obtained free of charge from the General Radio Co., W. Concord, Mass., 01781.)

14. Kundert, W. R., "New Performance, New Convenience, with the New Sound and Vibration Analyzer," *General Radio Experimenter*, Vol 37, No. 9 & 10, September-October, 1963.

15. Arthur A. Rieger and Harvey H. Hubbard "Response of Structures to High Intensity Noise," *Noise Control*, Vol 5, No. 5, September, 1959, pp 13–19.

[4] Bendat and Piersol, op. cit., p. 219–222.

File Courtesy of GRWiki.org

File Courtesy of GRWiki.org

Section 4—Principles of Operation

4.1 DESCRIPTION OF CIRCUIT.

Figure 4-1 is a block diagram of the Type 1381 Random-Noise Generator (refer also to Figure 7-3). The noise source is a semiconductor diode (CR101). The noise is amplified in a band-pass amplifier with an automatic-gain-control circuit that maintains a constant output level (Q101 through Q106 plus CR102 and CR103). The passband of this amplifier is 100 to 200 kHz. This noise is heterodyned down to the frequency range of 0 to 50 kHz by a balanced modulator (Q107 through Q110). The oscillator that drives the modulator (Q111 and Q112) produces a symmetrical, almost-square wave at 150 kHz. The output of the modulator is passed through a trap circuit to remove remnants of the oscillator signal, through an amplifier (Q113), and then to one of three low-pass filters. These have cutoff frequencies of 2, 5, and 50 kHz and are selected by means of the BANDWIDTH control S101. The noise is then amplified (Q114 and Q115) and is applied to the clipping circuit (CR104—CR110). The clipping is symmetrical and is adjustable by means of the CLIPPING control, S102, on the front panel to 2, 3, 4, or 5 σ. In the ∞ (infinity) position of the CLIPPING control, this circuit is disconnected and there is no clipping. The OUTPUT LEVEL control, R146, and the output amplifier (Q116, Q117) follow.

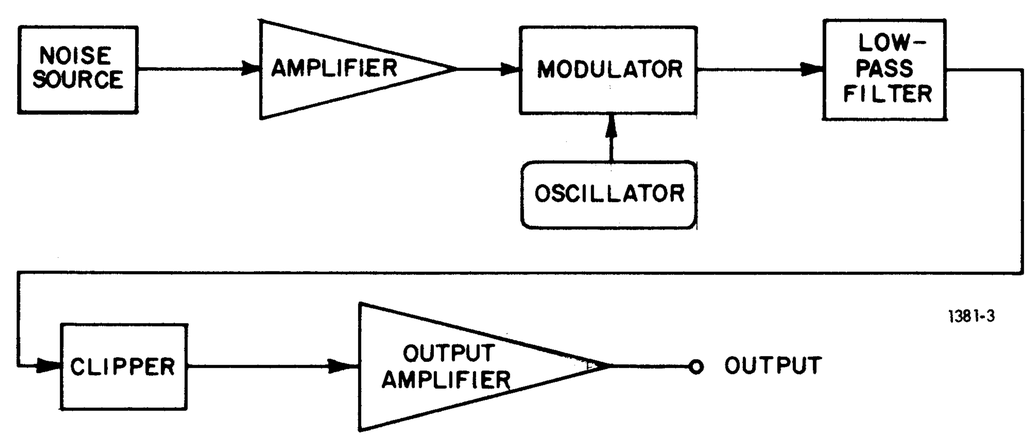

Figure 4-1.
Block diagram of the 1381 Random-Noise Generator.

A voltage-regulated power supply (Q501, Q502, Q503) is used to ensure stability of operation over the specified range of line voltage. A slide switch at the rear of the instrument permits easy changeover of the primary connections of the power transformer for operation on either a 100- to 125-volt or a 200- to 250-volt power line.

File Courtesy of GRWiki.org

File Courtesy of GRWiki.org

Section 5 – Operating Procedure

5.1 GENERAL.

With the instrument placed in position on the bench or installed in a relay rack, set the screwdriver-operated line-voltage slide switch (see Figure 1-2) to the range corresponding to the power-line voltage. Connect the instrument to the line power, using the power cable supplied (P/N 4200-9622), and turn on the POWER switch.

Follow the instructions given in paragraphs 5.2, 5.3, and 5.4 for setting the BANDWIDTH, CLIPPING, and OUTPUT LEVEL controls.

5.2 BANDWIDTH CONTROL.

The BANDWIDTH control is a three-position selector switch that sets the upper cutoff frequency of the noise spectrum. At this frequency, adjustable to either 2, 5, or 50 kHz, the spectrum level is down 3 dB. At higher frequencies, the spectrum level falls 12 dB per octave. Changing this switch setting automatically changes the attenuation built into the filter networks, so that the over-all rms noise output remains substantially the same. As a result, in the flat portion of the spectrum, the spectral level of the noise is greater for the lesser bandwidths. At full output (OUTPUT LEVEL control fully CW) and with no load, the output voltage is approximately 3.0 V, rms. The voltage spectral levels in the flat portion of each spectrum, for the three different bandwidths, are given in Table 5.1. In each case, the spectral level remains substantially flat at frequencies down to 2 Hz.

Graphs of the voltage spectra for the three different bandwidths are shown in Figure 3-3.

TABLE 5-1
Voltage spectral levels for different bandwidths, with an output of 3 V.

BANDWIDTH	VOLTAGE SPECTRAL LEVEL IN 1-HERTZ BANDWIDTH
2 kHz	64 mV
5 kHz	40 mV
50 kHz	13 mV

File Courtesy of GRWiki.org

5.3 CLIPPING CONTROL.

The CLIPPING control is useful when it is desirable or necessary to limit the occasional wide extremes of amplitude that characterize a Gaussianly-distributed random noise. The CLIPPING control produces symmetrical clipping of the noise, independent of the position of the OUTPUT LEVEL control. The clipping is adjustable to either 2, 3, 4, or 5 σ, where σ is the rms value of the noise voltage. In the ∞ position of the CLIPPING control, no clipping occurs. Clipping to even the 2-σ level has negligible effect on the rms amplitude (a reduction of about 1%) and upon the spectrum (a slight shifting of energy to higher frequencies). It should be kept in mind that further reduction of bandwidth by filtering in external systems will remove the effect of the clipping, and tend to restore the distribution to Gaussian.

5.4 OUTPUT LEVEL CONTROL.

The OUTPUT LEVEL control is a continuous rotary control by means of which the output level can be set at any selected value between its maximum open-circuit value of approximately 3 V and 3 mV (or less). When setting the output level to some specific value, use an average-responding ac voltmeter for the measurement.

5.5 OUTPUT CONNECTIONS.

5.5.1 Output Impedance.

The output impedance of the Type 1381 Random-Noise Generator is 600 Ω. The maximum open-circuit output voltage is 3 V, rms, and occasional peaks of the noise voltage may exceed 4 times that value. The output can be short-circuited without causing distortion of the noise. The maximum output current into a short-circuited load is 5 mA, rms, with occasional peaks that may exceed 4 times that value.

5.5.2 Grounding.

A captive link on the lower binding post on the front panel can be secured between the lower two binding posts, to connect the LOW OUTPUT terminal directly to the case of the instrument, thereby connecting it directly to the ground wire of the three-wire power cord. When the captive link is open, these two lower terminals are connected internally by a 10-Ω resistor, which keeps the instrument substantially grounded at all times. Opening the link, in effect, inserts the 10-Ω resistor between the LOW OUTPUT terminal and ground, and may be of value in interrupting possible ground loops in which large-amplitude currents at power-line frequencies may contribute to measurement errors.

5.5.3 Rear-Panel Output Jack.

In some situations it may be desirable to use the output connector on the rear panel of the generator, for instance, when the instrument is mounted in a relay rack. A BNC jack is provided for this purpose.

NOTE

The outer shell of the connector, which is the low side of the output, is insulated from the case of the instrument and is connected to the case only when the captive link noted in paragraph 5.5.2 is connected between the lower two binding posts.

5.5.4 DC In The Output.

There may be a small component of dc voltage at the OUTPUT terminals because of leakage in the output coupling capacitor, C124, which produces a voltage drop in R151. Under usual conditions it is less than 0.25 V. When a load having dc resistance that is low compared to R151 (18 kilohms) is connected across the output terminals, this dc voltage is significantly reduced.

5.6 USE OF AUXILIARY EQUIPMENT TO MODIFY OUTPUT.

5.6.1 Generating Lower Levels.

Various attenuating devices can be connected to the OUTPUT of the generator to reduce the power level. General Radio Type 1450 Decade Attenuators, with input and output impedances of 600 ohms, can be inserted between the 1381 and a 600-ohm load, for accurate attenuation in decibel steps.

5.6.2 Generating Higher Levels.

The noise generated by the Type 1381 Random-Noise Generator can be amplified by any amplifier whose frequency range is adequate. The high crest factor of Gaussianly distributed random noise must be kept in mind in choosing the power rating of the amplifier, so that the noise is not clipped. An amplifier capable of driving 40 W, sine wave, into a load will be capable of driving only 5 W of random noise into that load if peaks below 4σ are to be passed without clipping.

5.6.3 Generating Bands of Noise.

In some applications it is desirable to use more or less narrow bands of noise. Because the output impedance is 600Ω, it is a simple matter to drive a filter designed for operation at that impedance level.

Wave analyzers that make the filtered signal available as an output are convenient for use as a filter. For narrow bands of noise of fixed bandwidth, the General Radio Type 1900-A Wave Analyzer can be used. Its bandwidths are 3, 10, and 50 Hz, and its frequency range is 0 to 50 kHz. For constant-percentage bandwidths, several analyzers are available, and their bandwidths are given in Table 5-2.

TABLE 5-2
Analyzers with constant-percentage bandwidths.

ANALYZER	BANDWIDTH
1558	1 octave
1564	1/3, 1/10 octave
1568	1%

File Courtesy of GRWiki.org

The power available at the OUTPUT terminals of these various analyzers is not great; for general utility, the narrow-band noise from the analyzer will need amplification (refer to paragraph 5.6.2).

When the frequency response is measured with bands of noise, several of these analyzers can be synchronized to the chart paper on the 1521 Graphic-Level Recorder, the abcissae of the chart paper indicating the center frequency of the band of noise.

Wider bands of noise can be generated by use of the Type 1952 Universal Filter, which contains independently adjustable low- and high-pass units. Upper and lower cutoff frequencies can be adjusted over the range from 4 Hz to 60 kHz.

5.7 GENERATING TWO PARTIALLY CORRELATED RANDOM-NOISE SIGNALS.

In experiments on correlation techniques, it is sometimes necessary to generate two random-noise signals having a known degree of correlation. Such a pair of signals can be easily produced from two 1381 Random-Noise Generators by connecting a resistor between their high OUTPUT terminals as shown in Figure 5-1. If the output amplitudes are made equal, the normalized correlation coefficient of the two noise signals will be

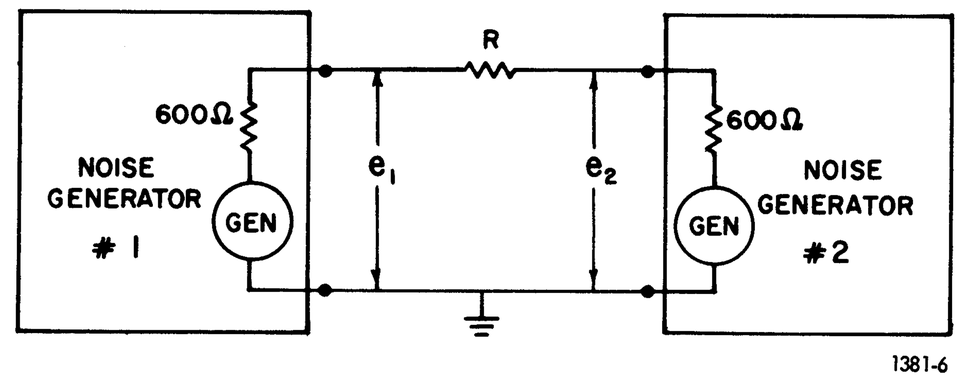

Figure 5-1.
Method of producing varying degrees of correlation between the two noise voltages e_1 and e_2 (see Figure 5-2).

$$\rho = \frac{\overline{e_1\, e_2}}{\sqrt{\overline{e_1^2}\;\overline{e_2^2}}} = \frac{2R' + 2}{(R')^2 + 2R' + 2}$$

where e_1 and e_2 are the two output voltages, the overbar indicates the time average, R' is $\frac{R}{600}$, and R is the value of resistance used. The magnitude of the output voltage is somewhat reduced by the loading on each terminal, and the ratio, r, of the actual output voltage to the open-circuit output voltage is plotted, together with ρ, in Figure 5-2, as a function of R.

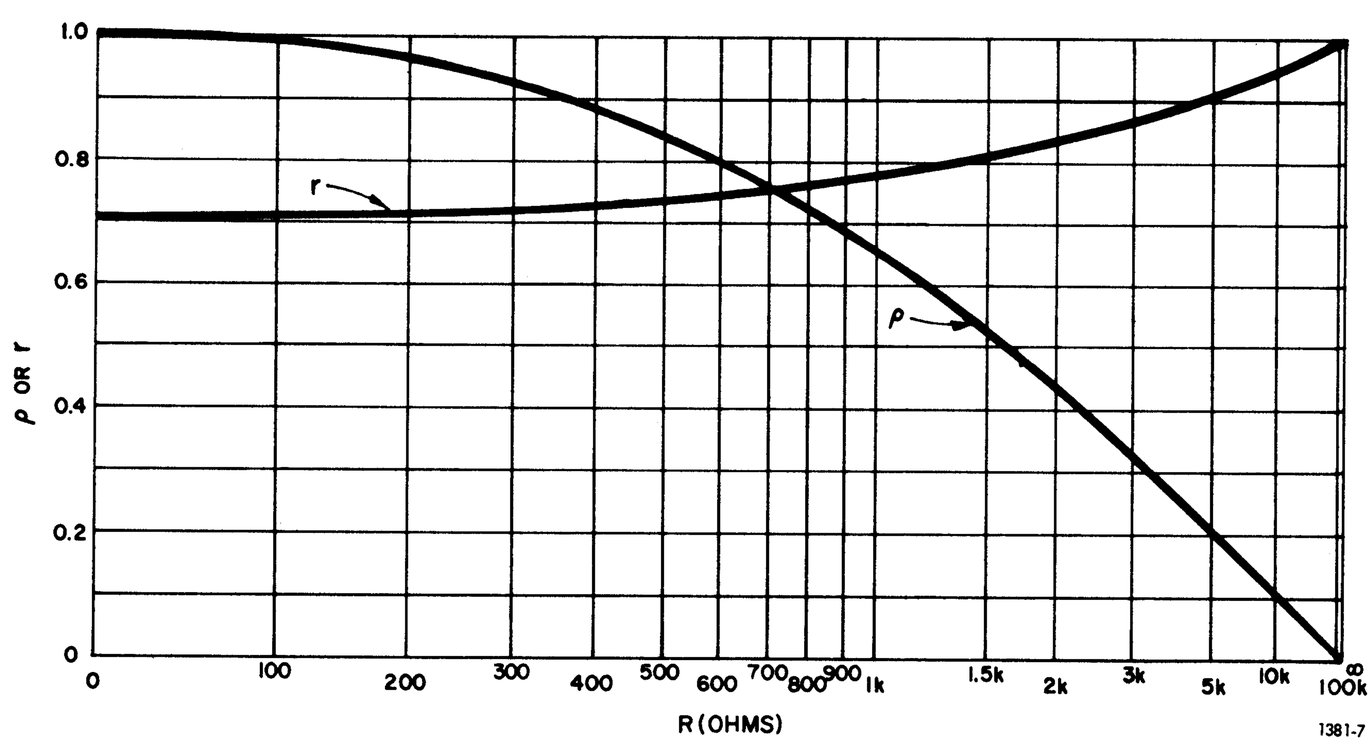

Figure 5-2.
Normalized correlation coefficient (ρ) of outputs of two noise generators and ratio of output voltage to that (v) with no resistor, as a function of the resistance connected between the HIGH terminals of the generators (see Figure 5-1).

File Courtesy of GRWiki.org

File Courtesy of GRWiki.org

Section 6 – Applications

6.1 GENERAL.

The Type 1381 Random-Noise Generator is useful wherever a source of noise having an adjustable bandwidth, variable clipping, and spectral intensity constant to very low frequencies is desirable. Its companion, the Type 1382 Random-Noise Generator, is useful where its features (white, pink, or USASI spectra, and balanced or unbalanced, floating or grounded output) are needed. In many applications either of these instruments will serve well, but there are cases where one or the other is particularly appropriate.

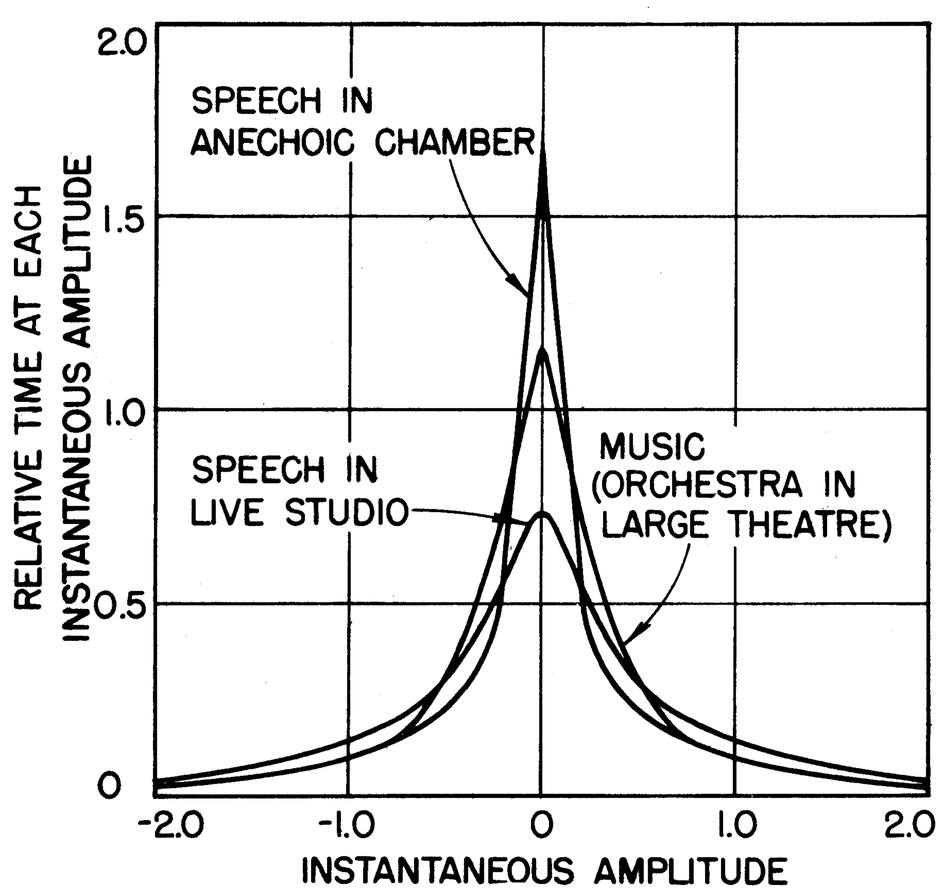

Figure 6-1.
Amplitude distribution curves for various sounds.
(Curves labeled "Speech" are for particular cases of sounds produced from readings of printed matter; curve labeled "Music" is an analysis of an orchestral selection made in a large theater.)

Some applications of a noise generator depend on its amplitude-distribution characteristics. For example, the amplitude distribution is similar to that of speech, music, and many other sounds or electrical disturbances that occur naturally,[1] while the amplitude distribution of a sine wave is entirely different. These similarities and differences can be seen by a comparison of the distributions of Figures 6-1 and 6-2.

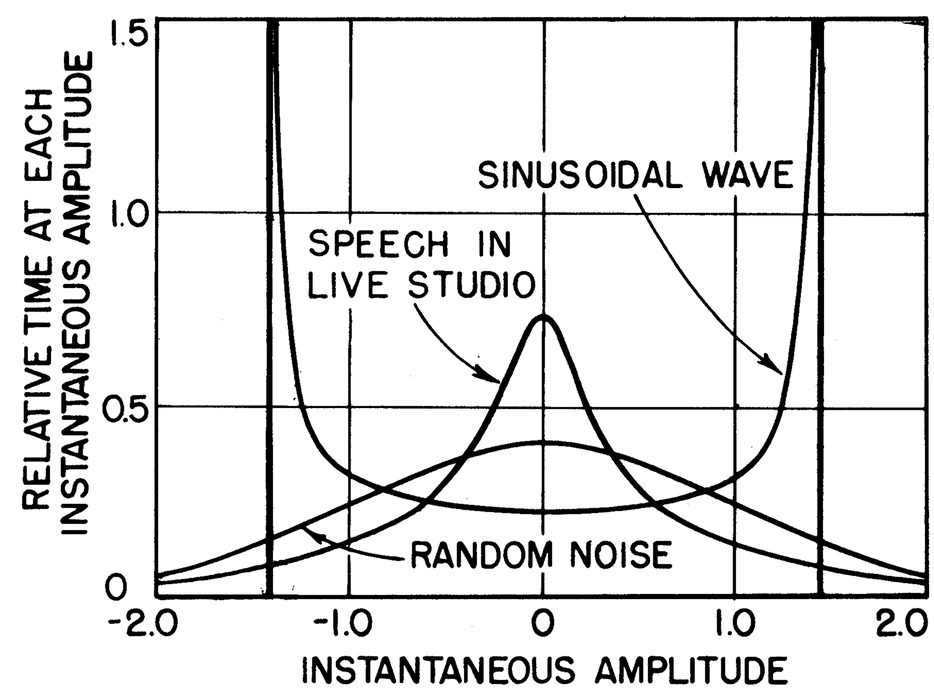

Figure 6-2.
Distribution curves of a single sinusoidal wave and a random noise.

Other applications depend on the various possible frequency spectra of noise. The spectrum is independent of the amplitude distribution, in the sense that a normal (or Gaussian) distribution of amplitudes is possible with any frequency spectrum — flat, broad, narrow, sloping, or peaked. Systems that affect one characteristic, however, may also affect the other. For example, clipping affects both the amplitude distribution and the spectrum. Linear filter networks used on purely random Gaussian noise do not affect the amplitude distribution but do alter the frequency characteristic and, correspondingly, the time scale. Linear filter networks, used after clipped noise, alter the spectrum and, if they reduce the bandwidth significantly, also tend to make the distribution more nearly Gaussian.

[1] Dunn, H.K., and White, S.D., "Statistical Measurements on Conversational Speech", Journal of the Acoustical Society of America, Vol. 11, No. 3, January 1940, pp 278–288.

File Courtesy of GRWiki.org

6.2 USE OF NOISE IN ELECTRICAL TESTING.

6.2.1 Simulation of Background Noise.

In studying the performance of radio, telemetery, radar or sonar systems with regard to their ability to transmit, detect, and recover signals in noise, it is convenient to simulate the real mixture of signal and naturally occurring noise by adding noise of controlled characteristics to a standard signal. Noise sometimes becomes the signal itself in tests of correlation receivers and other modern signal-processing systems.

6.2.2 Measuring Intermodulation Distortion.

Random noise is used in one very effective method of measuring intermodulation distortion.[2] White noise, which has been passed through a band-stop filter that reduces the level of the noise by, say, 80 dB over a narrow range of frequencies, is applied to the input of a system. Spectrum measurements of the system output indicate how much the "notch" in the noise spectrum has been filled in by intermodulation products. This is an especially significant measurement because white noise contains all the frequencies to which the system responds, and represents, in this sense, a "worst-case" type of test signal.

6.2.3 Measuring Crosstalk.

White noise is a very appropriate signal for use in measuring crosstalk in multichannel telephone, radio, or telemetry systems. Spectrum analysis of the crosstalk signal identifies the frequencies that cause the greatest disturbance, thereby providing some assistance in determining the cause and specifying a cure.

6.2.4 Testing Response of Meter Circuits.

One of the most straightforward methods of showing that an ac voltmeter circuit responds accurately to the peak, the rms, or the average value of the input voltage is to apply signals to it that have different ratios of peak, rms, and average values, and observe the indications. In addition to sine waves, and short rectangular pulses, Gaussian noise is useful for this purpose.[3] Rms, peak, and average values of various waveforms are given in Table 3-2. Although the peak value of Gaussian noise, theoretically, is infinite, the probability of ever observing an extremely large value is very slight. The response of peak-responding voltmeters to Gaussian noise has been studied and is predictable,[4] provided the characteristics of the voltmeter are known.

[2] MIL STD–188B.

[3] Its use is suggested in ASA (now USASI) Standard S1.4, American Standard Specification for General-Purpose Sound-Level Meters (Jan. 9, 1961).

[4] Peterson, A. P. G., "Response of Peak Voltmeters to Random Noise," The General Radio Experimenter, December, 1956.

6.2.5 Measurement of Effective Bandwidth.

When wave analyzers or filters (or more complex systems) are used to measure the spectral density of noise, it is necessary to know the effective bandwidth of the filter or of the system. The effective noise bandwidth can be thought of in terms of an ideal filter having a rectangular frequency characteristic (constant over a range of frequencies, and zero everywhere else). The effective noise bandwidth of a filter is the width of the pass band of the ideal filter whose output is exactly equal to the output of the actual filter when the inputs are the same white noise, provided the maximum transmissions of the two filters are the same. It can be measured by finding the total signal transmitted when white noise of known spectral level is applied to the input. The frequency range of the white noise must include all frequencies for which the filter being measured has appreciable transmission.

When the effective bandwidth of the input noise is known, the necessary computations are simplified. Then the effective bandwidth of the filter is

$$EBW_f = EBW_n \left(\frac{N_{out}}{N_{in} G_{fmax}} \right)^2$$

where EBW_n is the effective bandwidth of the noise;

N_{out} is the output noise voltage;

N_{in} is the input noise voltage;

G_{fmax} is the maximum or peak gain of the filter (as measured with a sinewave signal).

The effective bandwidth of the noise at the output of the Type 1381 Random-Noise Generator is closely equal to 1.11 times the upper cutoff frequency, as indicated by the BANDWIDTH control, i.e., 2.22, 5.55, or 55.5 kHz.

6.2.6 Determining Impulse Response by Cross-Correlation.

The impulse response of an amplifier, network, or system is the cross-correlation function of its output and input when white noise is applied at the input. In practice, the bandwidth of the noise need only be large compared to the frequency-response range of the system under test. If apparatus for measuring the correlation function is available, this method is usually more satisfactory than applying an impulse (delta function) and observing the response directly, as the amplitude of the impulse may have to exceed the overload level to produce an observable signal at the output.

6.2.7 Observing Overload Characteristics.

To observe the effect of overloading an amplifier, it is sometimes desirable to use a signal with a high peak factor, to limit the total rms power. Trains of short rectangular pulses have been used for this purpose, but unless such a signal consists of short pulses of alternating polarity, it is highly unsymmetrical, and, for this reason, may produce undesirable effects. Random noise is a symmetrical signal that can be used for this

File Courtesy of GRWiki.org

purpose. Gaussianly distributed noise, "white" over the audio band, has peaks greater than 4σ that occur often enough to be readily observable.

6.2.8 Broad-Band Testing or Burn-In.

When one wishes to test over-all performance of certain types of equipment, such as audio amplifiers, it may be desirable to use a broad-band signal so that the system is being exercised over its entire frequency range all at once.

The continuous spectrum of noise makes it ideal for this purpose. Clipping can be used to limit the peak amplitudes, permitting greater rms levels without overload.

It is also conceivable that certain types of electroacoustical equipment may require some sort of run-in or burn-in for which random noise may be the ideal test signal.

6.3 USE OF NOISE IN ACOUSTICAL AND PSYCHOACOUSTICAL TESTING.

6.3.1 Frequency-Response Measurements.

Frequency-response measurements of electroacoustic devices made with a sine-wave tone source, especially when made in nonanechoic surroundings, are frequently difficult to interpret because of the large fluctuations in the response curve due either to characteristics of the device or to standing-wave patterns. When the response of a loudspeaker in a particular room is measured, for example, fine details are of little significance, because they depend upon the precise placement of the source and receiver in the room. When this is the case, the curve can be made easier to interpret by using a band of noise in place of the sine-wave signal.[5] The noise signal, in effect, averages the measurement over a range of frequencies, producing a smoother curve. A constant-bandwidth wave analyzer, such as the 1900,[6] having the filtered output available, with white noise applied at its input, can produce a band of noise 50-Hz wide, tuneable across the audio-frequency range (with the exception of frequencies below 50 Hz). This band of noise can be amplified and applied to the loudspeaker as the test signal. The response curve can be recorded with the 1521 Graphic Level Recorder[7] driving the tuning dial of the analyzer automatically, as in the 1910 Recording Wave Analyzer.

6.3.2 Measurements Under Reverberant Conditions.

A band of random noise, centered on the frequency of interest, is a very useful signal for measurements of reverberation time.[8, 9] There are many acoustical measurements that are made under reverberant conditions, such as determination of the acoustical absorption of materials. In obtaining the diffuse-field response of a microphone. "It is practically mandatory that a random-noise source be used."[10]

6.3.3 Sound-Transmission Measurements.

In measurements of the transmission of sound through panels, walls, and floors, random noise is often used, mainly because it is necessary to have a diffuse-sound field to obtain reproduceable results. As mentioned above, the use of a random-noise signal is one of the best methods of obtaining a diffuse-sound field. Random noise is, again, a useful signal for measurement of sound attenuation in heating and air-conditioning ducts.

6.3.4 Psychoacoustical Testing.

Random noise is an important signal for psychoacoustical tests, such as masking or interference tests, loudness measurements, determination of critical bandwidths, and audiometric tests. The techniques used in making such tests are discussed in the various issues of the Journal of the Acoustical Society of America and in various psychological journals. There is a useful bibliography for these applications.[11]

6.4 VIBRATION TESTING.

The Type 1381 Random-Noise Generatior is useful as a signal source for driving shakers for random-noise vibration testing.[12,13] Because the spectrum level is flat down to 2 Hz, it is especially useful for vibration testing of large systems. The adjustable clipping feature is useful also, because it limits the extreme amplitudes, to protect the shakers or loudspeakers that produce the vibrations, and to prevent overload problems in the amplifiers used to drive them. If the bandwidth of the clipped noise is reduced by subsequent filtering, the clipping is removed also, and peaks greater than 3σ again appear. In general, if further spectrum-shaping operations are performed on the output of the Type 1381, the clipping in the generator will not be effective.

6.5 DEMONSTRATING STATISTICAL PROPERTIES.

6.5.1 Measurement of Amplitude Distribution.

An experimental method of measuring the amplitude distribution of random noise is presented in a General Radio

---

[5] Beranek, L. L., op. cit. 665–666.

[6] General Radio Experimenter, Volume 38, No. 4, April, 1964.

[7] General Radio Experimenter, Volume 38, No. 9, Sept., 1964.

[8] Beranek, L. L., op. cit. pp. 804–806.

[9] General Radio Experimenter, Volume 38, No. 9, Sept., 1964.

[10] Beranek, L. L., op. cit. pp. 639–640.

[11] Stevens, S. S., Loring, J. G. S., and Cohen, Dorothy, Bibliography on Hearing, Harvard University Press, Cambridge, Mass., 1955; particularly those references listed in Sections 139 (p. 571), 157 (p. 573) and 222–228 (pp. 579f).

[12] Crandall, S. H., Random Vibration, Volume 2, the M. I. T. Press, Cambridge, Massachusetts (1963), Chapter 9.

[13] Harris, C. M., and Crede, C. E., Shock and Vibration Handbook, 3 Vols., McGraw-Hill Book Co., Inc., New York, 1961.

File Courtesy of GRWiki.org

Student Experiment Note.[14] The 1381 is particularly suitable for this purpose because of its clipping feature, by means of which the amplitude distribution can be changed, and because, when clipping is not used, its amplitude distribution is more accurately Gaussian than that of the Type 1390-B, called for in the note.

6.5.2 Demonstration of Correlation Theory.

In experiments on correlation theory, it is often necessary to generate two random signals having a known correlation. Such signals can be generated easily with two 1381 Random-Noise Generators. The procedure for doing so is described in paragraph 5.7.

Correlation is properly measured by multiplying two signals together and averaging the result. When equipment for this purpose is not available, the degree of correlation between two random signals can be observed by means of oscillographic correlegrams or scatterplots.[15] These are substantially equivalent to Lissajous patterns for random signals.

---

[14] General Radio Co., Experiments for the Student Laboratory, "Distribution of Random Noise Voltages", No. STX—104 (Jan., 1967). A copy of this note can be obtained free of charge by writing to General Radio, West Concord, Mass., 01781.

[15] Licklider, J. C. R., and Dzendolet, E., "Oscillographic Scatterplots Illustrating Various Degrees of Correlation", Science, Vol. 107, No. 2770, p. 121—124 (Jan. 30, 1948).

File Courtesy of GRWiki.org

Section 7—Service and Maintenance

7.1 WARRANTY.

We warrant that each new instrument manufactured and sold by us is free from defects in material and workmanship and that, properly used, it will perform in full accordance with applicable specifications for a period of two years after original shipment. Any instrument or component that is found within the two-year period not to meet these standards, after examination by our factory, District Office, or authorized repair agency personnel, will be repaired, or, at our option, replaced without charge, except for tubes or batteries that have given normal service.

7.2 SERVICE.

The two-year warranty stated above attests the quality of materials and workmanship in our products. When difficulties do occur, our service engineers will assist in any way possible. If the difficulty cannot be eliminated by use of the following service instructions, please write or phone our Service Department (see rear cover), giving full information of the trouble and of steps taken to remedy it. Be sure to mention the type and serial numbers of the instrument.

Before returning an instrument to General Radio for service, please write to our Service Department or nearest District Office, requesting a Returned Material Tag. Use of this tag will ensure proper handling and identification. For instruments not covered by the warranty, a purchase order should be forwarded to avoid unnecessary delay.

7.3 MINIMUM-PERFORMANCE STANDARDS.

A complete examination of a random-noise generator to determine conformance to operating specifications should include measurement of the spectrum and the amplitude distribution. These measurements are extremely difficult to make, requiring a number of items of specialized equipment. Measurement of the spectrum, for example, requires the use of analyzers tunable to frequencies as low as 2 Hz, having known detector characteristics (viz: true rms) and sufficiently long smoothing time following the detector to permit accurate measurements. Sufficient time must be spent in making the measurements to overcome the build-up in the long-time-constant smoothing filters.

File Courtesy of GRWiki.org

Measurement of the amplitude distribution requires the use of an amplitude distribution analyzer, several models of which are commercially available, although they are not yet found in the average electronics laboratory. The 1381 Generators have been carefully checked for spectrum and amplitude distribution before leaving General Radio, and the following simple checks may be used for incoming inspection, to show that the noise generator is operating normally. The required test equipment is listed in Table 7-1.

TABLE 7-1
Test equipment required for checking minimum-performance standards.

INSTRUMENT	REQUIREMENTS	RECOMMENDED
Ac Voltmeter	Sensitivity = 10 mV or less Frequency range = 20 Hz – 2 MHz	Ballantine model 314A or equivalent (refer to paragraph 3.3.3).
Oscilloscope	Sensitivity = 0.1 V/cm or less Bandwidth = 5 MHz or more Medium-persistance phosphor	Tektronix Model 543B or equivalent.

a. Set the line-voltage switch, S502, at the rear of the instrument, for the appropriate line voltage. Connect the instrument to the line power; use the three-wire power cable supplied. Turn ON the POWER switch and set the BANDWIDTH control to 50 kHz, the CLIPPING control to ∞, and the OUTPUT LEVEL control fully clockwise.

b. Measure the output with a high-impedance electronic voltmeter (refer to Table 7-1). It should read at least 3 V, rms. (If this voltage is measured with an average-responding voltmeter, the voltmeter should indicate at least 2.7 V, as explained in paragraph 3.3.3.)

NOTE

Do not use a peak-responding voltmeter for this measurement.

c. Turn the BANDWIDTH control to 5 kHz, then to 2 kHz. At these frequencies, the indication of the voltmeter should be about the same as in step c.

d. Connect an oscilloscope to the OUTPUT terminals, and turn the CLIPPING control on the Generator to 2 σ. The peaks of the noise should be clipped at ±6 V (the noise should not extend beyond that value). In the 3σ position, the noise should not extend beyond ±9 V, etc. In the ∞ position of the CLIPPING control, with the BANDWIDTH control set at 50 kHz and the OUTPUT LEVEL control fully clockwise, occasional peaks of the noise voltage should be seen beyond 4σ (±12 V). The appearance of the unclipped noise should be perfectly symmetrical about the zero-voltage level, i.e., substantially equal number of peaks in each direction should be observed.

7.4 TROUBLE ANALYSIS.

Table 7-2 lists the equipment required for trouble analysis.

TABLE 7-2
Test equipment required for trouble-analysis procedures.

INSTRUMENT	REQUIREMENTS	RECOMMENDED
Dc Voltmeter	20,000 Ω/V or more	Triplett Model 630A
Ohmmeter	———	Simpson Model 260
Wattmeter	Indicates up to 10 W at 115 V	GR Variac adjustable autotransformer, Model W5MT3W

When the instrument is not energized, the resistance from the collector of Q502 to ground, measured with the negative probe on ground, is approximately 2 kilohms. When the instrument is energized and operating normally, the power consumption is approximately 6 W.

Should the instrument fail to operate normally, use Table 7-4, to locate the source of the trouble (refer to Figures 7-2 and 7-3).

7.5 RECALIBRATION.

If repairs are made that include the replacement of some components, the internal controls listed below may have to be readjusted (see Figures 7-1, 7-2, and 7-3). The required test equipment is noted in Table 7-3.

TABLE 7-3
Test equipment required for recalibration procedures.

INSTRUMENT	REQUIREMENTS	RECOMMENDED
Wave Analyzer	Tuneable through vicinity of 150 kHz	Hewlett-Packard Model 310-A

R103: Connect a Ballantine Model 314A Voltmeter (or equivalent) to measure the ac voltage with respect to ground at the emitter of Q103. The instrument should be at a temperature between 20 and 30°C. Adjust R103 so that the voltmeter indicates 100 mV.

R108: Connect the above-mentioned voltmeter and an oscilloscope to the OUTPUT terminals. Turn the BANDWIDTH control to 50 kHz and the CLIPPING control to 2σ. Set the sensitivity of the oscilloscope to 1 V per cm, and adjust the OUTPUT LEVEL control so that clipping occurs at +2 V and -2 V. Then set R108 so that the voltmeter indicates 1 V, rms (0.891 V if the voltmeter is the average-responding type). After making this adjustment, turn the CLIPPING control to ∞ (no clipping).

The output must exceed 3.0 V, rms, (2.7 V on an average-responding meter) when the OUTPUT LEVEL control is fully clockwise.

C125: In the event of replacement of Q111, Q112, or adjacent components, it may be necessary to set the local-oscillator trap to exclude the local-oscillator signal from the output. Use a wave analyzer that is tuneable to 150 kHz and adjacent frequencies. Find the local-oscillator frequency (this may require detuning C125); then adjust C125 for a minimum indication at that frequency. Use the following procedure:

a. Connect the analyzer to the OUTPUT from the 1381.

b. Set BANDWIDTH to 50 kHz, OUTPUT LEVEL to maximum.

File Courtesy of GRWiki.org

c. Search, with the analyzer, for the peak reading near 150 kHz.

d. Tune C125 on the 1381 for minimum reading on the analyzer.

R513: For repairs to the voltage-regulator section of the power supply, it may be necessary to reset R513. Use a dc voltmeter and adjust R513 so that the dc voltage above ground (chassis) at the collector of Q502 is 31 V.

7.6 KNOB REMOVAL.

To remove the knob on a front-panel control, either to replace one that has been damaged or to replace the associated control, proceed as follows:

a. Grasp the knob firmly with the fingers, close into the panel (or the indicator dial, if applicable) and pull the knob straight, away from the panel.

CAUTION

Do not pull on the dial to remove a dial/knob assembly. Always remove the knob first.

b. Observe the position of the setscrew in the bushing, with respect to any panel markings (or at the full CCW position of a continuous control).

c. Release the setscrew with an Allen wrench and pull the bushing off the shaft.

d. Remove and retain the black nylon thrust washer, behind the dial/knob assembly, as appropriate.

NOTE

To separate the bushing from the knob, if for any reason they should be combined off the instrument, drive a machine tap a turn or two into the bushing to provide sufficient grip for easy separation.

7.7 KNOB INSTALLATION.

To install a "Snap-on" knob assembly on the control shaft:

a. Place the black nylon thrust washer over the control shaft, if appropriate.

b. Mount the bushing on the shaft, using a small slotted piece of wrapping paper as a shim for adequate panel clearance.

c. Orient the setscrew on the bushing with respect to the panel-marking index and lock the setscrew with an Allen wrench.

NOTE

Make sure that the end of the shaft does not protrude through the bushing or the knob won't seat properly.

d. Place the knob on the bushing with the retention spring opposite the setscrew.

e. Push the knob in until it bottoms and pull it slightly to check that the retention spring is seated in the groove in the bushing.

NOTE

If the retention spring in the knob comes loose, reinstall it in the interior notch with the small slit in the outer wall.

7.8 PILOT-LAMP REMOVAL.

To replace the pilot lamp (GE No. 328, GR P/N 5600-0300), remove the instrument from its cabinet and turn the instrument upside down. Insert a small screwdriver under the retaining strap at the rear of the lamp holder. Raise the end of the strap slightly and it will slide free, permitting the lamp to be withdrawn.

TABLE 7-4
DC test voltages for trouble analysis.

LOCATION	DC VOLTS ABOVE GROUND	POSSIBLE LOCATION OF TROUBLE IF VOLTAGE IS OUTSIDE LIMITS
C503 +	+45 to +51 (with 115-V line)	Power cord not plugged in; Fuse (F501) blown.
Collector, Q502	+31	Q501, Q502, Q503, CR506, or their associated circuits, etc.
Emitter, Q503	+14 to +16	Q501, Q502, Q503, CR506, etc.
Base, Q101	+12 to +14	CR101, Q101, etc.
Cathode, CR506	+14 to +16	CR506
Emitter, Q103	+0.6 to +0.8	Q102, Q103, etc.
Collector, Q103	+13 to +17	Q104, Q105, etc.
Collector, Q106	+13 to +17	Q106, etc.
Collector, Q111 and Q112	+24 to +27	Q111, Q112, etc.
Emitter, Q113	0.3 to 0.5	Q113, etc.
Collector, Q113	+27 to +30, (changes with setting of S101)	Q113, L104, L105, L106, etc.
Collector, Q115	+14 to +17	Q114, Q115, etc.
C124, +	+15 to +17	Q116, Q117, etc.

File Courtesy of GRWiki.org

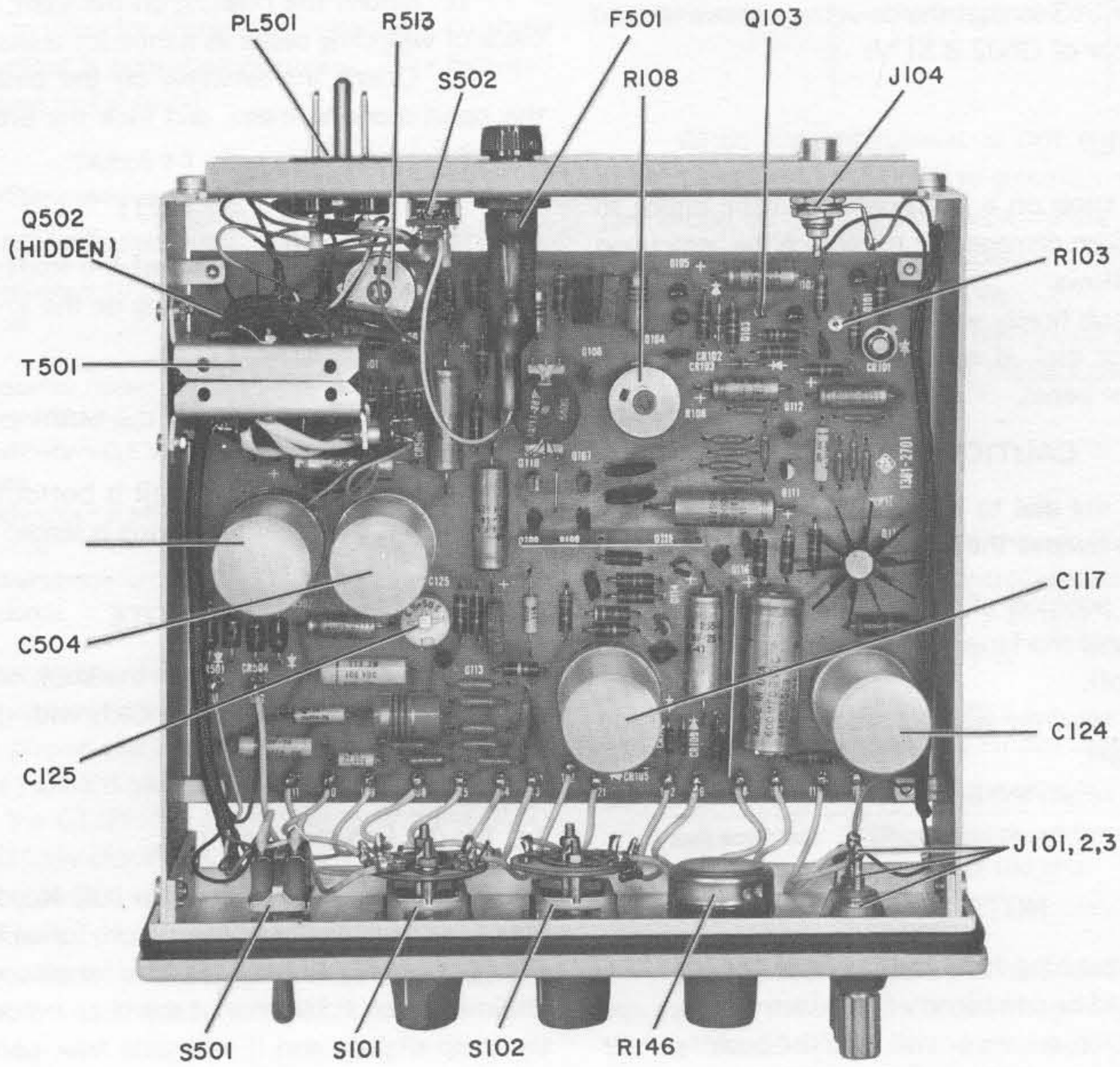

Figure 7-1.
Top interior view of the Generator.

File Courtesy of GRWiki.org

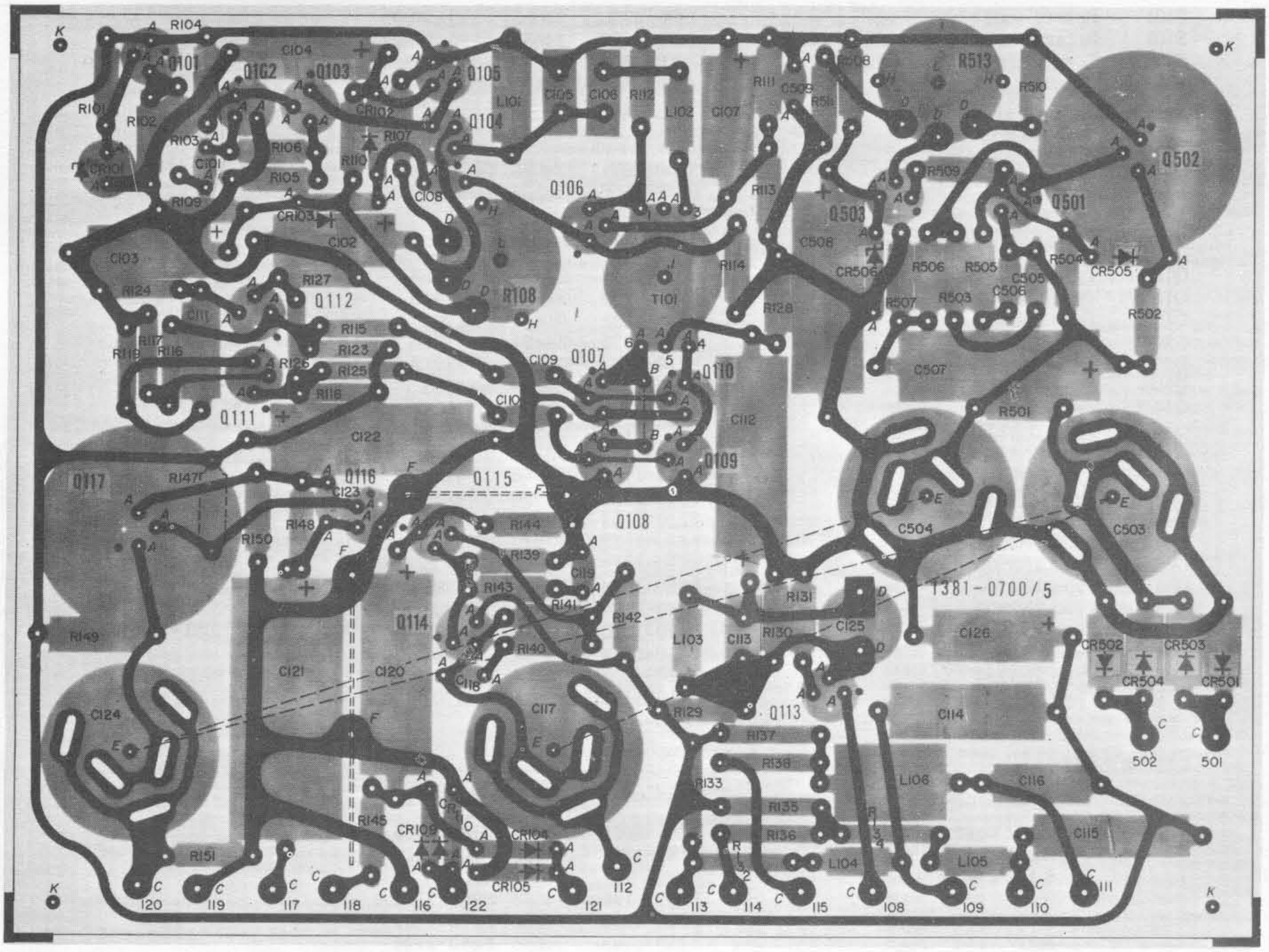

Figure 7-2.
Etched-circuit-board assembly. Complete board is P/N 1381-2701.

NOTE

The number shown on the foil side of the board is not the part number for the complete assembly. This assembly number is given in the caption.

The dot on the foil at the transistor socket indicates the collector lead.

File Courtesy of GRWiki.org

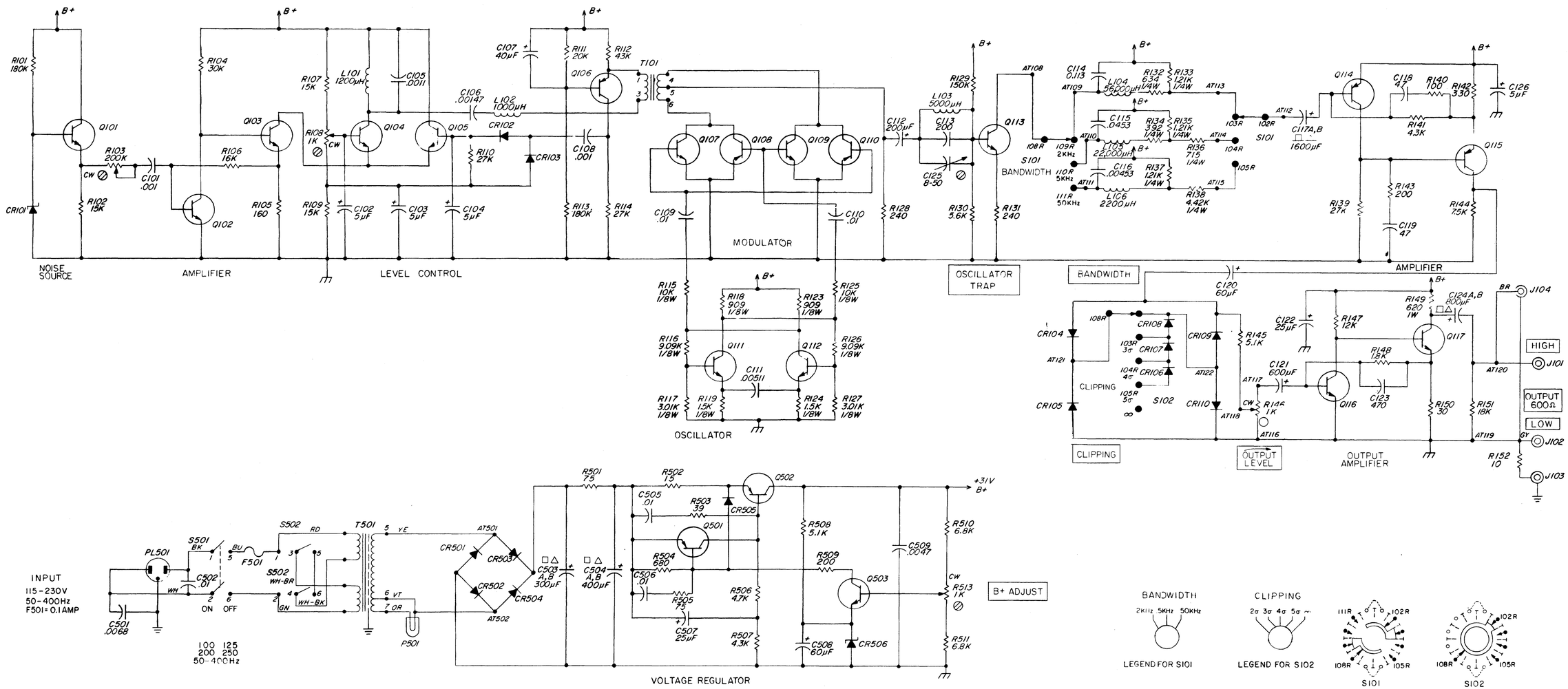

Rotary switch sections are shown as viewed from the panel end of the shaft. The first digit of the contact number refers to the section. The section nearest the panel is 1, the next section back is 2, etc. The next two digits refer to the contact. Contact 01 is the first position clockwise from a strut screw (usually the screw above the locating key), and the other contacts are numbered sequentially (02, 03, 04, etc), proceeding clockwise around the section. A suffix F or R indicates that the contact is on the front or rear of the section, respectively.

Figure 7-3.
Schematic circuit diagram of the Type 1381 Random-Noise Generator.

File Courtesy of GRWiki.org

Parts Lists

Ref. Desig.	Description	GR Part No.	FMC	Mfg. Part No.	Fed. Stock No.
CAPACITORS					
C101	Ceramic, .001μF +80-20% 500 V	4404-2109	72982	831, 0.001μF +80-20%	5910-983-9994
C102	Electrolytic, 5μF +100-10% 50 V	4450-3900	37942	2040595S9C10 X 3	5910-448-5527
C103	Electrolytic, 5μF +100-10% 50 V	4450-3900	37942	2040595S9C10 X 3	5910-448-5527
C104	Electrolytic, 5μF +100-10% 50 V	4450-3900	37942	2040595S9C10 X 3	5910-448-5527
C105	Mica, .0011μF ±2% 100 V	4700-0683	14655	22A, 0.0011μF ±2%	
C106	Mica, .00147μF ±2% 100 V	4700-0687	14655	22A, 0.00147μF ±2%	
C107	Electrolytic, 40μF +100-10% 6 V	4450-3600	37942	20-40707S4	5910-952-0467
C108	Ceramic, .001μF +80-20% 500 V	4404-2109	72982	831, 0.001μF +80-20%	5910-983-9994
C109	Ceramic, .01μF +80-20% 500 V	4406-3109	72982	811, .01μF +80-20%	5910-977-7579
C110	Ceramic, .01μF +80-20% 500 V	4406-3109	72982	811, .01μF +80-20%	5910-977-7579
C111	Plastic, .0051μF ±1% 200 V	4860-7408	84411	663uW, 0.00511μF ±1%	
C112	Electrolytic, 200μF +100-10% 6 V	4450-2610	37942	TT, 200μF +100-10%	5910-945-1836
C113	Mica, 200pF ±5% 500 V	4700-0507	14655	22A, 200pF ±5%	
C114	Plastic, 0.113μF ±2% 100 V	4860-9711	84411	663uW, 0.113μF ±2%	
C115	Plastic, .0453μF ±2% 100 V	4860-7831	84411	663uW, 0.0453μF ±2%	
C116	Plastic, .00453μF ±2% 200 V	4860-7388	84411	663uW, 0.00453μF ±2%	
C117A	Electrolytic, 800μF +100-10% 10 V	4450-5603	37942	20-22406990	5910-931-7042
C117B	Electrolytic, 800μF				
C118	Ceramic, 47pF ±10% 500 V	4404-0478	72982	831, 47pF ±10%	
C119	Ceramic, 47pF ±10% 500 V	4404-0478	72982	831, 47pF ±10%	
C120	Electrolytic, 60μF +100-10% 25 V	4450-2900	56289	D17872	5910-799-9280
C121	Electrolytic, 600μF +100-10% 3 V	4450-5589	37942	TCM, 600μF 3 dcwv	
C122	Electrolytic, 25μF +100-10% 50 V	4450-3000	56289	D33883	5910-799-9285
C123	Ceramic, 470pF ±10% 500 V	4404-1478	72982	831, 470pF ±10%	
C124A	Electrolytic, 400μF +100-10% 25 V	4450-5621	37942	TT, 400/400μF +100-10%	
C124B					
C125	Tantalum, 8-50pF 350 V	4910-1170	72982	557-051, 8-50pF	
C126	Electrolytic, 5μF +100-10% 50 V	4450-3900	37942	2040595D9C10X3	5910-448-5527
C501	Ceramic, .0068μF +80-20% 500 V	4406-2689	72982	811, 0.0068μF +80-20%	
C502	Ceramic, .01μF +80-20% 500 V	4406-3109	72982	811, 0.01μF +80-20%	5910-977-7579
C503A	Electrolytic, 150μF +100-10% 75 V	4450-5620	37942	20-222544990	
C503B	Electrolytic, 150μF				
C504A	Electrolytic, 200μF +100-10% 50 V	4450-5591	80183	D38858	5910-959-4572
C504B	Electrolytic, 200μF				
C505	Ceramic, .01μF +80-20% 500 V	4406-3109	72982	811, 0.01μF +80-20%	5910-977-7579
C506	Ceramic, .01μF +80-20% 500 V	4406-3109	72982	811, 0.01μF +80-20%	5910-977-7579
C507	Electrolytic, 25μF +100-10% 50 V	4450-3000	56289	D33883	5910-799-9285
C508	Electrolytic, 60μF +100-10% 25 V	4450-2900	56289	D17872	5910-799-9280
C509		4405-2479	72982	801, .0047μF +80-20%	
DIODES					
CR101	Type ND012	6084-1014	84411	ND012	
CR102	Type 1N3604	6082-1001	24446	1N3604	5960-995-2199
CR103	Type 1N3604	6082-1001	24446	1N3604	5960-995-2199
CR104	Type 1N816	6083-1001	14433	1N816	
CR105	Type 1N816	6083-1001	14433	1N816	
CR106	Type 1N816	6083-1001	14433	1N816	
CR107	Type 1N816	6083-1001	14433	1N816	
CR108	Type 1N816	6083-1001	14433	1N816	
CR109	Type 1N816	6083-1001	14433	1N816	
CR110	Type 1N816	6083-1001	14433	1N816	
CR501	Type 1N3253	6081-1001	79089	1N3253	5961-814-4251
CR502	Type 1N3253	6081-1001	79089	1N3253	5961-814-4251
CR503	Type 1N3253	6081-1001	79089	1N3253	5961-814-4251
CR504	Type 1N3253	6081-1001	79089	1N3253	5961-814-4251
CR505	Type 1N4009	6082-1012	24446	1N4009	
CR506	Type 1N965B	6083-1015	07910	1N965B	5960-877-6192
FUSE					
F501	0.1 Amp	5330-0400	71400	MDL, 0.1 Amp	
INDUCTORS					
L101	Choke, 1200μH ±5%	4300-7005	99800	2500-32, 1200μH ±5%	
L102	Choke, 1000μH ±5%	4300-7000	99800	2500-28, 1000μH ±5%	
L103	Choke, 5000μH ±10%	4300-6387	72259	Wee Ductor, 5000μH ±10%	
L104	Choke, 56000μH ±10%	4300-6397	24759	CHM-8, 56,000μH ±10%	
L105	Choke, 22000μH ±10%	4300-6393	72259	Wee Ductor, 22000μH ±10%	
L106	Choke, 2200μH ±10%	4300-6370	99800	3500, 2200μH ±10%	5950-088-9939

File Courtesy of GRWiki.org

Ref. Desig.	Description	GR Part No.	FMC	Mfg. Part No.	Fed. Stock No.
JACKS					
J101	Binding Post	0938-3000	24655	0938-3000	
J102	Binding Post	0938-3000	24655	0938-3000	
J103	Binding Post	0938-3032	24655	0938-3032	
J104	BNC Type Jack	4230-2301	09408	UG-1094A/U	
PILOT LIGHT					
P501	GE #328	5600-0300	24454	#328	6240-155-7857
PLUG					
PL501	3 prong type	4240-0600	24655	4240-0600	5935-816-0254
RESISTORS					
R101	Composition, 180kΩ ±5% 1/2 W	6100-4185	01121	RC20GF184J	5905-192-0660
R102	Composition, 15kΩ ±5% 1/2 W	6100-3155	01121	RC20GF153J	5905-279-2616
R103	Potentiomenter, 200kΩ ±30%	6049-0113	73138		
R104	Composition, 30kΩ ±5% 1/2 W	6100-3305	01121	RC20GF303J	5905-192-3978
R105	Composition, 160kΩ ±5% 1/2 W	6100-1165	01121	RC20GF161J	5905-256-0415
R106	Composition, 16kΩ ±5% 1/2 W	6100-3165	01121	RC20GF163J	5905-279-3501
R107	Composition, 15kΩ ±5% 1/2 W	6100-3155	01121	RC20GF153J	5905-279-2616
R108	Potentiometer, 1kΩ ±10%	6056-0138	11236	Type 115, 1kΩ ±10%	
R109	Composition, 15kΩ ±5% 1/2 W	6100-3155	01121	RC20GF153J	5905-279-2616
R110	Composition, 27kΩ ±5% 1/2 W	6100-3275	01121	RC20GF273J	5905-279-3499
R111	Composition, 20kΩ ±5% 1/2 W	6100-3205	01121	RC20GF203J	5905-192-0649
R112	Composition, 4.3kΩ ±5% 1/2 W	6100-2435	01121	RC20GF432J	5905-257-0935
R113	Composition, 180kΩ ±5% 1/2 W	6100-4185	01121	RC20GF184J	5905-192-0660
R114	Composition, 27kΩ ±5% 1/2 W	6100-3275	01121	RC20GF273J	5905-279-3499
R115	Film, 10kΩ ±1% 1/8 W	6250-2100	75042	CEA, 10kΩ ±1%	5905-883-4847
R116	Film, 9.09kΩ ±1% 1/8 W	6250-1909	75042	CEA, 9.09kΩ ±1%	5905-655-3167
R117	Film, 3.01kΩ ±1% 1/8 W	6250-1301	75042	CEA, 3.01kΩ ±1%	5905-702-5974
R118	Film, 909Ω ±1% 1/8 W	6250-0909	75042	CEA, 909Ω ±1%	
R119	Film, 1.5kΩ ±1% 1/8 W	6250-1150	75042	CEA, 1.5kΩ ±1%	5905-581-6913
R123	Film, 909Ω ±1% 1/8 W	6250-0909	75042	CEA, 909Ω ±1%	
R124	Film, 1.5kΩ ±1% 1/8 W	6250-1150	75042	CEA, 1.5kΩ ±1%	5905-581-6913
R125	Film, 10kΩ ±1% 1/8 W	6250-2100	75042	CEA, 10kΩ ±1%	5905-883-4847
R126	Film, 9.09kΩ ±1% 1/8 W	6250-1909	75042	CEA, 9.09kΩ ±1%	5905-655-3167
R127	Film, 3.01kΩ ±1% 1/8 W	6250-1301	75042	CEA, 3.01kΩ ±1%	5905-702-5974
R128	Composition, 240Ω ±5% 1/2 W	6100-1245	01121	RC20GF241J	5905-279-2593
R129	Composition, 150kΩ ±5% 1/2 W	6100-4155	01121	RC20GF154J	5905-279-2522
R130	Composition, 5.6kΩ ±5% 1/2 W	6100-2565	01121	RC20GF562J	5905-195-6453
R131	Composition, 240kΩ ±5% 1/2 W	6100-1245	01121	RC20GF241J	5905-279-2593
R132	Film, 634Ω ±1% 1/4 W	6350-0634	75042	CEB, 634Ω ±1%	
R133	Film, 1.21kΩ ±1% 1/4 W	6350-1121	75042	CEB, 1.21kΩ ±1%	5905-577-7504
R134	Film, 392Ω ±1% 1/4 W	6350-0392	75042	CEB, 392Ω ±1%	
R135	Film, 1.21kΩ ±1% 1/4 W	6350-1121	75042	CEB, 1.21kΩ ±1%	5905-577-7504
R136	Film, 715Ω ±1% 1/4 W	6350-0715	75042	CEB, 715Ω ±1%	
R137	Film, 1.21kΩ ±1% 1/4 W	6350-1121	75042	CEB, 1.21kΩ ±1%	5905-577-7504
R138	Film, 4.42kΩ ±1% 1/4 W	6350-1442	75042	CEB, 4.42kΩ ±1%	
R139	Composition, 27kΩ ±5% 1/2 W	6100-3275	01121	RC20GF273J	5905-279-3499
R140	Composition, 100Ω ±5% 1/2 W	6100-1105	01121	RC20GF101J	5905-190-8889
R141	Composition, 4.3kΩ ±5% 1/2 W	6100-2435	01121	RC20GF432J	5905-257-0935
R142	Composition, 330Ω ±5% 1/2 W	6100-1335	01121	RC20GF331J	5905-192-3971
R143	Composition, 200Ω ±5% 1/2 W	6100-1205	01121	RC20GF201J	5905-279-2674
R144	Composition, 7.5kΩ ±5% 1/2 W	6100-2755	01121	RC20GF752J	5905-249-4195
R145	Composition, 5.1kΩ ±5% 1/2 W	6100-2515	01121	RC20GF512J	5905-279-2019
R146	Potentiometer, 1kΩ ±10%	6020-0250	24655	6020-0250	
R147	Composition, 12kΩ ±5% 1/2 W	6100-3125	01121	RC20GF123J	5905-279-3502
R148	Composition, 1.8kΩ ±5% 1/2 W	6100-2185	01121	RC20GF182J	5905-190-8881
R149	Composition, 620Ω ±5% 1 W	6110-1625	01121	GB, 620Ω ±5%	
R150	Composition, 30Ω ±5% 1/2 W	6100-0305	01121	RC20GF300J	5905-279-3518
R151	Composition, 18kΩ ±5% 1/2 W	6100-3185	01121	RC20GF183J	5905-279-3500
R152	Composition, 10Ω ±5% 1/2 W	6100-0105	01121	RC20GF100J	5905-190-8883
R501	Composition, 57Ω ±5% 1/2 W	6100-0755	01121	RC20GF750J	5905-279-1758
R502	Composition, 15Ω ±5% 1/2 W	6100-0155	01121	RC20GF150J	5905-279-3521
R503	Composition, 39Ω ±5% 1/2 W	6100-0395	01121	RC20GF390J	5905-195-5546
R504	Composition, 680Ω ±5% 1/2 W	6100-1685	01121	RC20GF681J	5905-195-6791
R505	Composition, 75Ω ±5% 1/2 W	6100-0755	01121	RC20GF750J	5905-279-1758
R506	Composition, 4.7kΩ ±5% 1/2 W	6100-2475	01121	RC20GF472J	5905-279-3504
R507	Composition, 4.3kΩ ±5% 1/2 W	6100-2435	01121	RC20GF432J	5905-257-0935
R508	Composition, 5.1kΩ ±5% 1/2 W	6100-2515	01121	RC20GF512J	5905-279-2019
R509	Composition, 200Ω ±5% 1/2 W	6100-1205	01121	RC20GF210J	5905-279-2674
R510	Composition, 6.8kΩ ±5% 1/2 W	6100-2685	01121	RC20GF682J	5905-279-3503
R511	Composition, 6.8kΩ ±5% 1/2 W	6100-2685	01121	RC20GF682J	5905-279-3503
R513	Potentiometer, 1kΩ ±10%	6056-0138	11236	115, 1kΩ ±10%	

File Courtesy of GRWiki.org

Ref. Desig.	Description	GR Part No.	FMC	Mfg. Part No.	Fed. Stock No.
SWITCHES					
S101	Rotary wafer	7890-4880	24655	7890-4880	
S102	Rotary wafer	7890-4890	24655	7890-4890	
S501	Toggle, Power Control	7910-1300	04009	83053-SA	5930-909-3510
S502	Toggle	7910-0831	42190	4603	
TRANSFORMERS					
T101		5000-2021	24655	5000-2021	
T501		0745-4500	24655	0745-4500	
TRANSISTORS					
Q101	Type 2N3391A	8210-1092	24454	2N3391A	
Q102	Type 2N3391A	8210-1092	24454	2N3391A	
Q103	Type 2N3903	8210-1132	93916	2N3903	
Q104	Type 2N3391A	8210-1092	24454	2N3391A	
Q105	Type 2N3391A	8210-1092	24454	2N3391A	
Q106	Type 2N3905	8210-1114	04713	2N3905	
Q107	Type 2N4123	8120-1123	93916	2N4123	
Q108	Type 2N4125	8210-1125	93916	2N4125	
Q109	Type 2N4123	8210-1123	93916	2N4123	
Q110	Type 2N4125	8210-1125	93916	2N4125	
Q111	Type 2N4124	8210-1154	93916	2N4124	
Q112	Type 2N4124	8210-1154	93916	2N4124	
Q113	Type 2N3903	8210-1132	93916	2N3903	
Q114	Type 2N3905	8210-1114	04713	2N3905	
Q115	Type 2N3905	8210-1114	04713	2N3905	
Q116	Type 2N3903	8210-1132	93916	2N3903	
Q117	Type 2N697	8210-1040	82219	2N697	5961-752-0150
Q501	Type 2N3905	8210-1114	04713	2N3905	
Q502	Type 2N1131	8210-1025	96214	2N1131	5960-788-8644
Q503	Type 2N3903	8210-1132	93916	2N3903	
OTHER PARTS					
	Rack Adaptor Set	0480-9722	24655	0480-9722	
	Cabinet, Convertible - Bench	4181-2625	24655	4181-2625	
	Hardware Set (Tier) 8 1/2'' wide	4181-1111	24655	4181-1111	
	Foot	5250-2120	24655	5250-2120	
	Foot	5250-2121	24655	5250-2121	
	Bail	5250-2123	24655	5250-2123	
	Foot	5260-2060	24655	5260-2060	
	O Ring	5855-0156	24655	5855-0156	
	Power Cable, 7 foot, 3-wire	4200-9622	24655	4200-9622	6150-968-0081
	Knob Assembly - Bandwidth	5500-5221	24655	5500-5221	
	Knob Assembly - Clipping	5500-5221	24655	5500-5221	
	Knob Assembly - Output level	5520-5221	24655	5520-5221	
	Lamp Holder Silk Screened	5600-1023	24655	5600-1023	
	Etched Circuit Assembly	1381-2701	24655	1381-2701	

File Courtesy of GRWiki.org

FEDERAL MANUFACTURERS CODE

From Federal Supply Code for Manufacturers Cataloging Handbooks H4-1 (Name to Code) and H4-2 (Code to Name) as supplemented through June, 1967.

Code	Manufacturers Name and Address
00192	Jones Mfg. Co., Chicago, Illinois
00194	Walsco Electronics Corp., Los Angeles, Calif.
00656	Aerovox Corp., New Bedford, Mass.
01009	Alden Products Co., Brockton, Mass.
01121	Allen-Bradley, Co., Milwaukee, Wisc.
01295	Texas Instruments, Inc., Dallas, Texas
02114	Ferroxcube Corp. of America, Saugerties, N. Y. 12477
02606	Fenwal Lab. Inc., Morton Grove, Ill.
02660	Amphenol Electronics Corp., Broadview, Ill.
02768	Fastex Division of Ill. Tool Works, Des Plaines, Ill. 60016
03508	G. E. Semiconductor Products Dept., Syracuse, N. Y. 13201
03636	Grayburne, Yonkers, N. Y. 10701
03888	Pyrofilm Resistor Co., Cedar Knolls, N. J.
03911	Clairex Corp., New York, N. Y. 10001
04009	Arrow, Hart and Hegeman Electric Co., Hartford, Conn. 06106
04713	Motorola Semi-Conduct Product, Phoenix, Ariz. 85008
05170	Engineered Electronics Co., Inc., Santa Ana, Calif. 92702
05624	Barber-Colman Co., Rockford, Ill. 61101
05820	Wakefield Eng., Inc., Wakefield, Mass. 01880
07127	Eagle Signal Div. of E. W. Bliss Co., Baraboo, Wisc.
07261	Avnet Corp., Culver City, Calif. 90230
07263	Fairchild Camera and Instrument Corp., Mountain View, Calif.
07387	Birtcher Corp., No. Los Angeles, Calif.
07595	American Semiconductor Corp., Arlington Heights, Ill. 60004
07828	Bodine Corp., Bridgeport, Conn. 06605
07829	Bodine Electric Co., Chicago, Ill. 60618
07910	Continental Device Corp., Hawthorne, Calif.
07983	State Labs Inc., N. Y., N. Y. 10003
07999	Amphenol Corp., Borg Inst. Div., Delavan, Wisc. 53115
08730	Vemaline Prod. Co., Franklin Lakes, N. J.
09213	General Electric Semiconductor, Buffalo, N. Y.
09408	Star-Tronics Inc., Georgetown, Mass. 01830
09823	Burgess Battery Co., Freeport, Ill.
09922	Burndy Corp., Norwalk, Conn. 06852
11236	C.P.S. of Berne, Inc., Berne, Ind. 46711
11599	Chandler Evans Corp., W. Hartford, Conn.
12498	Teledyn Inc., Crystalonics Div., Cambridge, Mass. 02140
12672	RCA Commercial Receiving Tube and Semi-conductor Div., Woodridge, N.J.
12697	Clarostat Mfg. Co. Inc., Dover, N. H. 03820
12954	Dickson Electronics Corp., Scottsdale, Ariz.
13327	Solitrone Devices, Tappan, N. Y. 10983
14433	ITT Semiconductors, W. Palm Beach, Florida
14655	Cornell Dubilier Electric Co., Newark N. J.
14674	Corning Glass Works, Corning, N. Y.
14936	General Instrument Corp., Hicksville, N. Y.
15238	ITT, Semiconductor Div. of Int. T. and T, Lawrence, Mass.
15605	Cutler-Hammer Inc., Milwaukee, Wisc. 53233
16037	Spruce Pine Mica Co., Spruce Pine, N. C.
19701	Electra Mfg. Co., Independence, Kansas 67301
21335	Fafnir Bearing Co., New Briton, Conn.
24446	G. E. Schenectady, N. Y. 12305
24454	G. E., Electronic Comp., Syracuse, N. Y.
24455	G. E. (Lamp Div), Nela Park, Cleveland, Ohio
24655	General Radio Co., W. Concord, Mass 01781
26806	American Zettler Inc., Costa Mesa, Calif.
28520	Hayman Mfg. Co., Kenilworth, N. J.
28959	Hoffman Electronics Corp., El Monte, Calif.
30874	International Business Machines, Armonk, N.Y.
32001	Jensen Mfg. Co., Chicago, Ill. 60638
35929	Constanta Co. of Canada Limited, Montreal 19, Quebec
37942	P. R. Mallory and Co. Inc., Indianapolis, Ind.
38443	Marlin-Rockwell Corp., Jamestown, N. Y.
40931	Honeywell Inc., Minneapolis, Minn. 55408
42190	Muter Co., Chicago, Ill. 60638
42498	National Co. Inc., Melrose, Mass. 02176
43991	Norma-Hoffman Bearings Corp., Stanford, Conn. 06904
49671	RCA, New York, N. Y.
49956	Raytheon Mfg. Co., Waltham, Mass. 02154
53021	Sangamo Electric Co., Springfield, Ill. 62705
54294	Shallcross Mfg. Co., Selma, N. C.
54715	Shure Brothers, Inc., Evanston, Ill.
56289	Sprague Electric Co., N. Adams, Mass.
59730	Thomas and Betts Co., Elizabeth, N. J. 07207
59875	TRW Inc. (Accessories Div), Cleveland, Ohio
60399	Torrington Mfg. Co., Torrington, Conn.
61637	Union Carbide Corp., New York, N. Y. 10017
61864	United-Carr Fastener Corp., Boston, Mass.
63060	Victoreen Instrument Co., Inc., Cleveland, Ohio
63743	Ward Leonard Electric Co., Mt. Vernon, N. Y.
65083	Westinghouse (Lamp Div), Bloomfield, N. J.
65092	Weston Instruments, Weston-Newark, Newark, N. J.
70485	Atlantic-India Rubber Works, Inc., Chicago, Ill. 60607
70563	Amperite Co., Union City, N. J. 07087
70903	Belden Mfg. Co., Chicago, Ill. 60644
71126	Bronson, Homer D., Co., Beacon Falls, Conn.
71294	Canfield, H. O. Co., Clifton Forge, Va. 24422
71400	Bussman Mfg. Div. of McGraw Edison Co., St. Louis, Mo.
71590	Centralab, Inc., Milwaukee, Wisc. 53212
71666	Continental Carbon Co., Inc., New York, N. Y.
71707	Coto Coil Co. Inc., Providence, R. I.
71744	Chicago Miniature Lamp Works, Chicago, Ill.
71785	Cinch Mfg. Co. and Howard B. Jones Div., Chicago, Ill. 60624
71823	Darnell Corp., Ltd., Downey, Calif. 90241
72136	Electro Motive Mfg. Co., Willmington, Conn.
72259	Nytronics Inc., Berkeley Heights, N. J. 07922
72619	Dialight Co., Brooklyn, N. Y. 11237
72699	General Instrument Corp., Capacitor Div., Newark, N. J. 07104
72765	Drake Mfg. Co., Chicago, Ill. 60656
72825	Hugh H. Eby, Inc., Philadelphia, Penn. 19144
72962	Elastic Stop Nut Corp., Union, N. J. 07083
72982	Erie Technological Products Inc., Erie, Penn.
73138	Beckman, Inc., Fullerton, Calif. 92634
73445	Amperex Electronics Co., Hicksville, N. Y.
73559	Carling Electric Co., W. Hartford, Conn.
73690	Elco Resistor Co., New York, N. Y.
73899	J. F. D. Electronics Corp., Brooklyn, N. Y.
74193	Heinemann Electric Co., Trenton, N. J.
74861	Industrial Condenser Corp., Chicago, Ill.
74970	E. F. Johnson Co., Waseca, Minn. 56093
75042	IRC Inc., Philadelphia, Penn. 19108
75382	Kulka Electric Corp., Mt. Vernon, N. Y.
75608	Linden and Co., Providence, R. I.
75915	Littelfuse, Inc., Des Plaines, Ill. 60016
76005	Lord Mfg. Co., Erie, Penn. 16512
76487	James Millen Mfg. Co., Malden, Mass. 02148
76545	Mueller Electric Co., Cleveland, Ohio 44114
76684	National Tube Co., Pittsburg, Penn.
76854	Oak Mfg. Co., Crystal Lake, Ill.
77147	Patton MacGuyer Co., Providence, R. I.
77166	Pass-Seymour, Syracuse, N. Y.
77263	Pierce Roberts Rubber Co., Trenton, N. J.
77339	Positive Lockwasher Co., Newark , N. J.
77542	Ray-O-Vac Co., Madison, Wisc.
77630	TRW, Electronic Component Div., Camden, N. J. 08103
77638	General Instruments Corp., Brooklyn, N. Y.
78189	Shakeproof Div. of Ill. Tool Works, Elgin, Ill. 60120
78277	Sigma Instruments Inc., S. Braintree, Mass.
78488	Stackpole Carbon Co., St. Marys, Penn.
78553	Tinnerman Products, Inc., Cleveland, Ohio
79089	RCA, Commercial Receiving Tube and Semi-conductor Div., Harrison, N. J.
79725	Wiremold Co., Hartford, Conn. 06110
79963	Zierick Mfg. Co., New Rochelle, N. Y.
80030	Prestole Fastener Div. Bishop and Babcock Corp., Toledo, Ohio
80048	Vickers Inc. Electric Prod. Div., St. Louis, Mo.
80131	Electronic Industries Assoc., Washington, D.C.
80211	Motorola Inc., Franklin Park, Ill. 60131
80258	Standard Oil Co., Lafeyette, Ind.
80294	Bourns Inc., Riverside, Calif. 92506
80431	Air Filter Corp., Milwaukee, Wisc. 53218
80583	Hammarlund Co. Inc., New York, N. Y.
80740	Beckman Instruments, Inc., Fullerton, Calif.
81073	Grayhill Inc., LaGrange, Ill. 60525
81143	Isolantite Mfg. Corp., Stirling, N. J. 07980
81349	Military Specifications
81350	Joint Army-Navy Specifications
81751	Columbus Electronics Corp., Yonkers, N. Y.
81831	Filton Co., Flushing, L. I., N. Y
81860	Barry Controls Div. of Barry Wright Corp., Watertown, Mass.
82219	Sylvania Electric Products, Inc., (Electronic Tube Div.), Emporium, Penn.
82273	Indiana Pattern and Model Works, LaPort, Ind.
82389	Switchcraft Inc., Chicago, Ill. 60630
82647	Metals and Controls Inc., Attleboro, Mass.
82807	Milwaukee Resistor Co., Milwaukee, Wisc.
83058	Carr Fastener Co., Cambridge, Mass.
83186	Victory Engineering Corp (IVECO), Springfield, N. J. 07081
83361	Bearing Specialty Co., San Francisco, Calif.
83587	Solar Electric Corp., Warren, Penn.
83740	Union Carbide Corp., New York, N. Y. 10017
84411	TRW Capacitor Div., Ogallala, Nebr.
84835	Lehigh Metal Products Corp., Cambridge, Mass. 02140
84971	TA Mfg. Corp., Los Angeles, Calif.
86577	Precision Metal Products of Malden Inc., Stoneham, Mass. 02180
86684	RCA (Electrical Component and Devices) Harrison, N. J.
88140	Cutler-Hammer Inc., Lincoln, Ill.
88219	Gould Nat. Batteries Inc., Trenton, N. J.
88419	Cornell Dubilier Electric Corp., Fuquay-Varina, N. C.
88627	K and G Mfg. Co., New York, N. Y.
89482	Holtzer Cabot Corp., Boston, Mass.
89665	United Transformer Co., Chicago, Ill.
90201	Mallory Capacitor Co., Indianapolis, Ind.
90750	Westinghouse Electric Corp., Boston, Mass.
90952	Hardware Products Co., Reading, Penn. 19602
91032	Continental Wire Corp., York, Penn. 17405
91146	ITT Cannon Electric Inc., Salem, Mass.
91293	Johanson Mfg. Co., Boonton, N. J. 07005
91598	Chandler Co., Wethersfield, Conn. 06109
91637	Dale Electronics Inc., Columbus, Nebr.
91662	Elco Corp., Willow Grove, Penn.
91719	General Instruments, Inc., Dallas, Texas
91929	Honeywell Inc., Freeport, Ill.
92519	Electra Insulation Corp., Woodside, Long Island, N. Y.
92678	Edgerton, Germeshausen and Grier, Boston, Mass.
93332	Sylvania Electric Products, Inc., Woburn, Mass.
93916	Cramer Products Co., New York, N. Y. 10013
94144	Raytheon Co. Components Div., Quincy, Mass.
94154	Tung Sol Electric Inc., Newark, N. J.
95076	Garde Mfg. Co., Cumberland, R. I.
95146	Alco Electronics Mfg. Co., Lawrence, Mass.
95238	Continental Connector Corp., Woodside, N. Y.
95275	Vitramon, Inc., Bridgeport, Conn.
95354	Methode Mfg. Co., Chicago, Ill.
95412	General Electric Co., Schenectady, N. Y.
95794	Ansconda American Brass Co., Torrington, Conn.
96095	Hi-Q Div. of Aerovox Corp., Orlean, N. Y.
96214	Texas Instruments Inc., Dallas, Texas 75209
96256	Thordarson-Meissner Div. of McGuire, Mt. Carmel, Ill.
96341	Microwave Associates Inc., Burlington, Mass.
96906	Military Standards
97966	CBS Electronics Div. of Columbia Broadcasting Systems, Danvers, Mass.
98291	Sealectro Corp., Mamaroneck, N. Y. 10544
98821	North Hills Electronics Inc., Glen Cove, N. Y.
99180	Transitron Electronics Corp., Melrose, Mass.
99378	Atlee Corp., Winchester, Mass. 01890
99800	Delevan Electronics Corp., E. Aurora, N. Y.

4/68

File Courtesy of GRWiki.org

GENERAL RADIO COMPANY

WEST CONCORD, MASSACHUSETTS 01781

617 369-4400 617 646-7400

DISTRICT OFFICES

METROPOLITAN NEW YORK*

845 Broad Avenue
Ridgefield, New Jersey 07657
Telephone N.Y. 212 964-2722
N.J. 201 943-3140

SYRACUSE

Pickard Building
East Molloy Road
Syracuse, New York 13211
Telephone 315 454-9323

NEW ENGLAND*

22 Baker Avenue
West Concord, Massachusetts 01781
Telephone 617 646-0550

PHILADELPHIA

Fort Washington Industrial Park
Fort Washington, Pennsylvania 19034
Telephone 215 646-8030

WASHINGTON* AND BALTIMORE

11420 Rockville Pike
Rockville, Maryland 20852
Telephone 301 946-1600

ORLANDO

113 East Colonial Drive
Orlando, Florida 32801
Telephone 305 425-4671

* Repair services are available at these district offices.

CHICAGO*

9440 W. Foster Avenue
Chicago, Illinois 60656
312 992-0800

CLEVELAND

5579 Pearl Road
Cleveland, Ohio 44129
Telephone 216 886-0150

LOS ANGELES*

1000 North Seward Street
Los Angeles, California 90038
Telephone 213 469-6201

SAN FRANCISCO

626 San Antonio Road
Mountain View, California 94040
Telephone 415 948-8233

DALLAS*

2600 Stemmons Freeway, Suite 210
Dallas, Texas 75207
Telephone 214 637-2240

TORONTO*

99 Floral Parkway
Toronto 15, Ontario, Canada
Telephone 416 247-2171

MONTREAL

1255 Laird Boulevard
Town of Mount Royal, Quebec, Canada
Telephone 514 737-3673
OTTAWA Telephone 613 233-4237

General Radio Company (Overseas), 8008 Zurich, Switzerland
General Radio Company (U.K.) Limited, Bourne End, Buckinghamshire, England
Representatives in Principal Overseas Countries

Printed in USA

File Courtesy of GRWiki.org