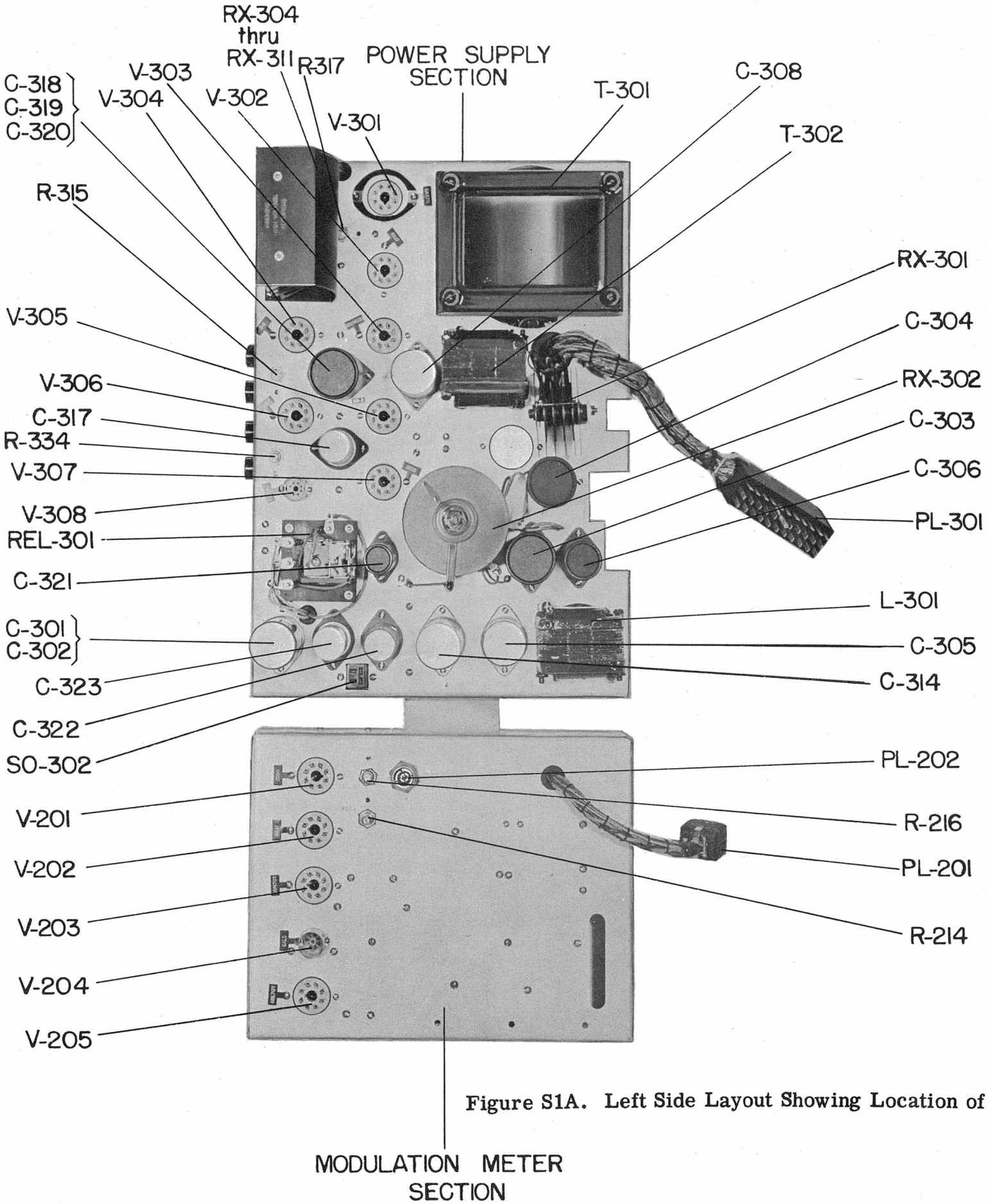

Figure S1A. Left Side Layout Showing Location of Tubes.

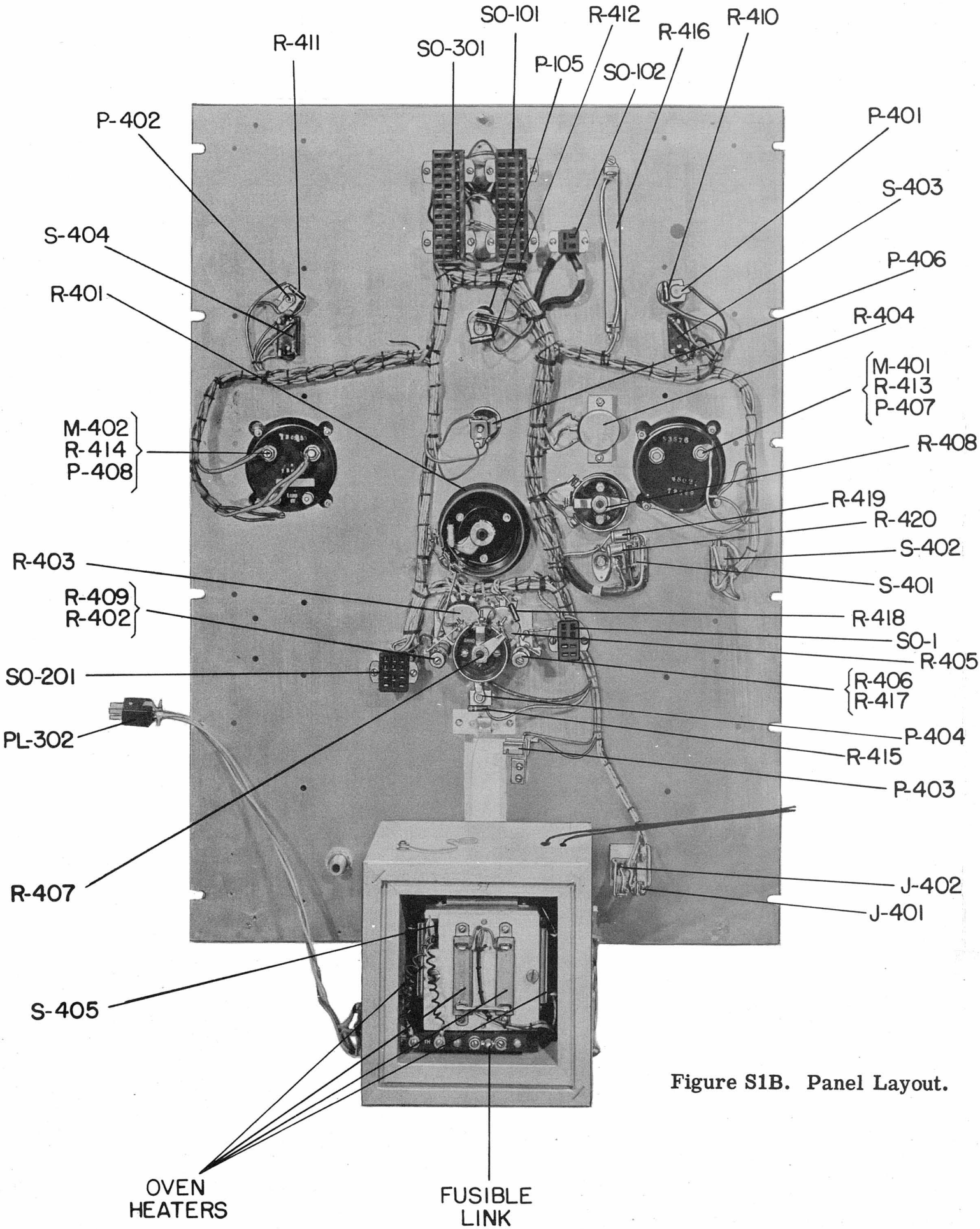

Figure S1B. Panel Layout.

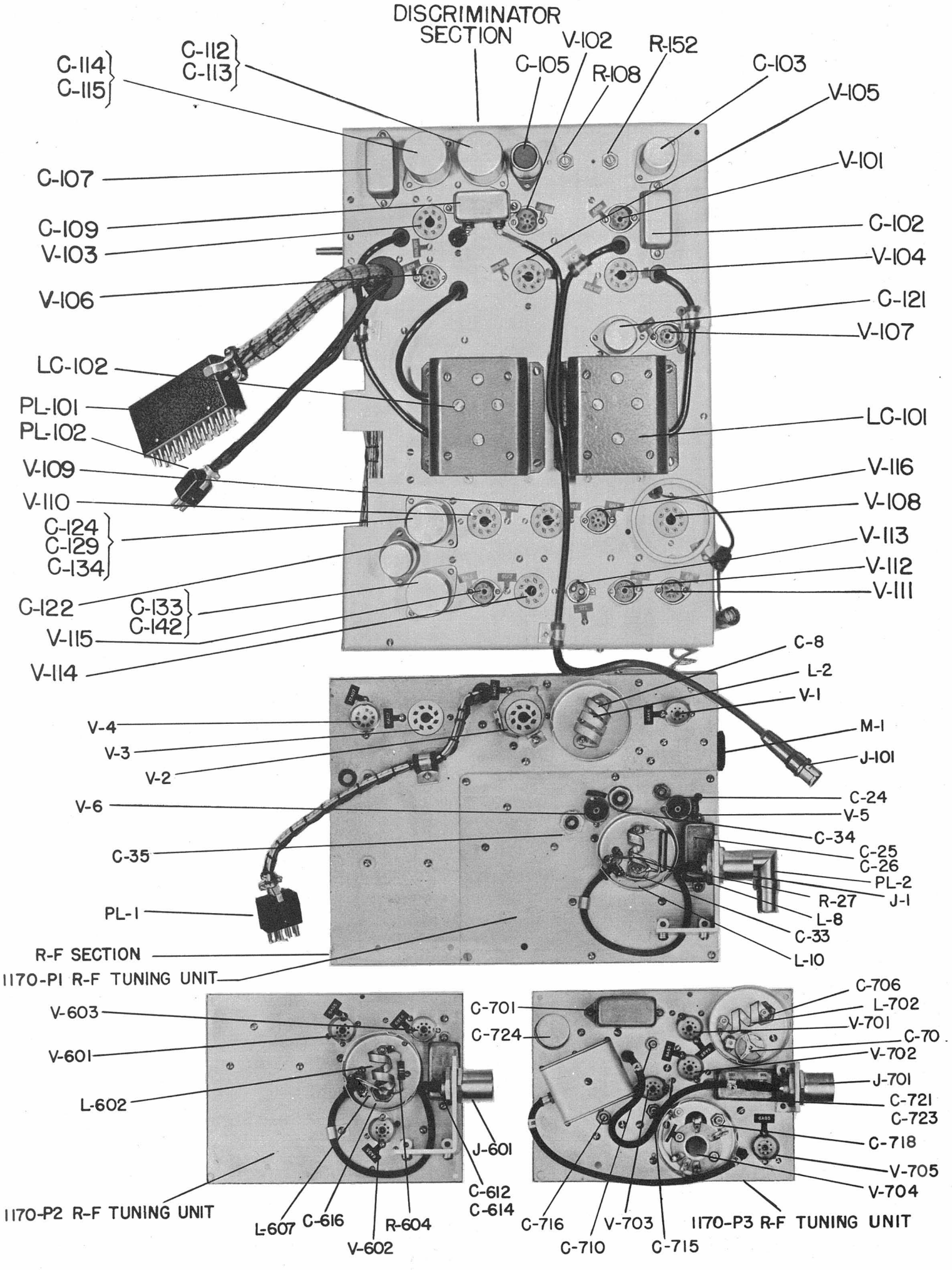

Figure S1C. Right Side Layout Showing Location of Tubes.

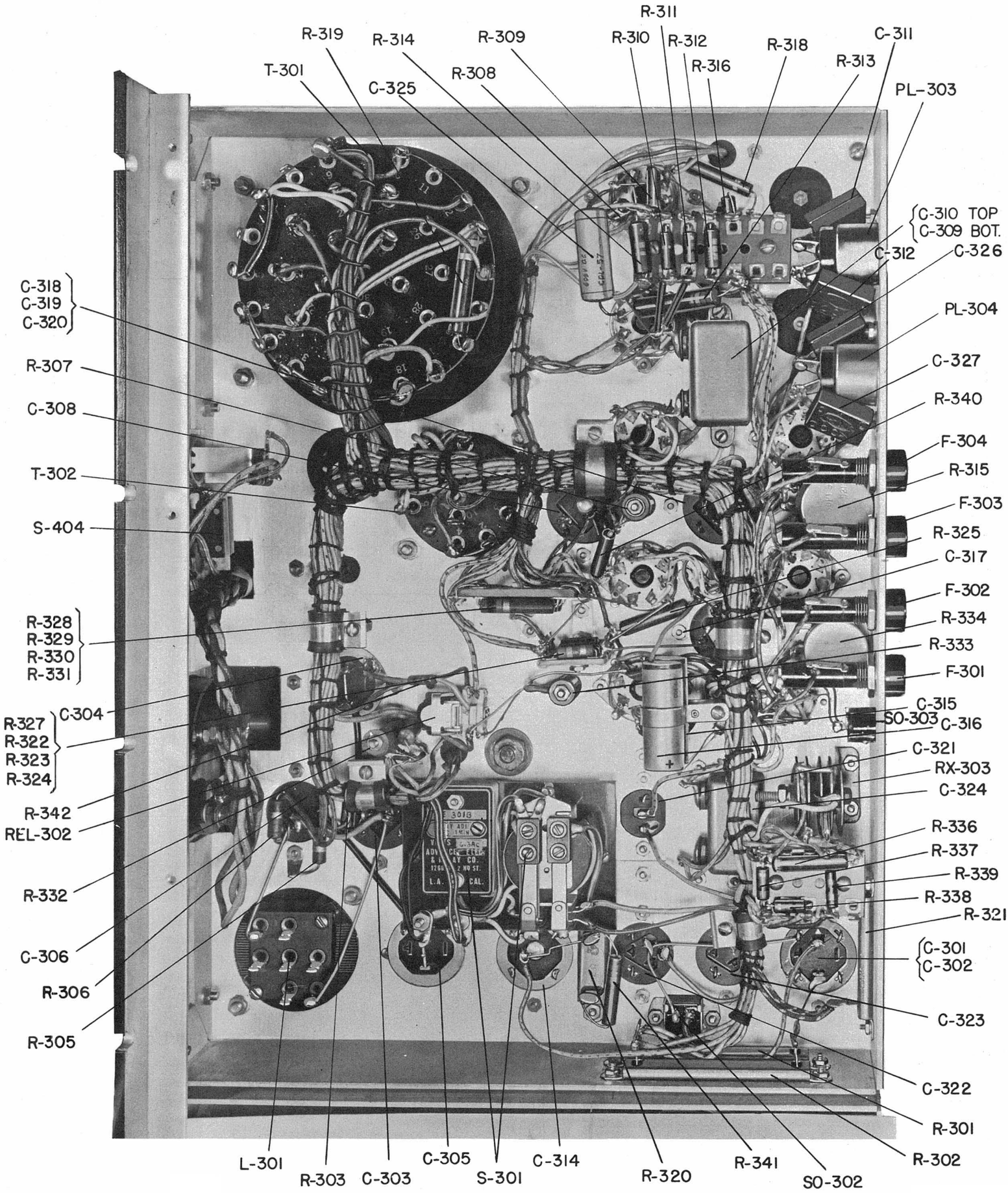

Figure S2. Power Supply Section.

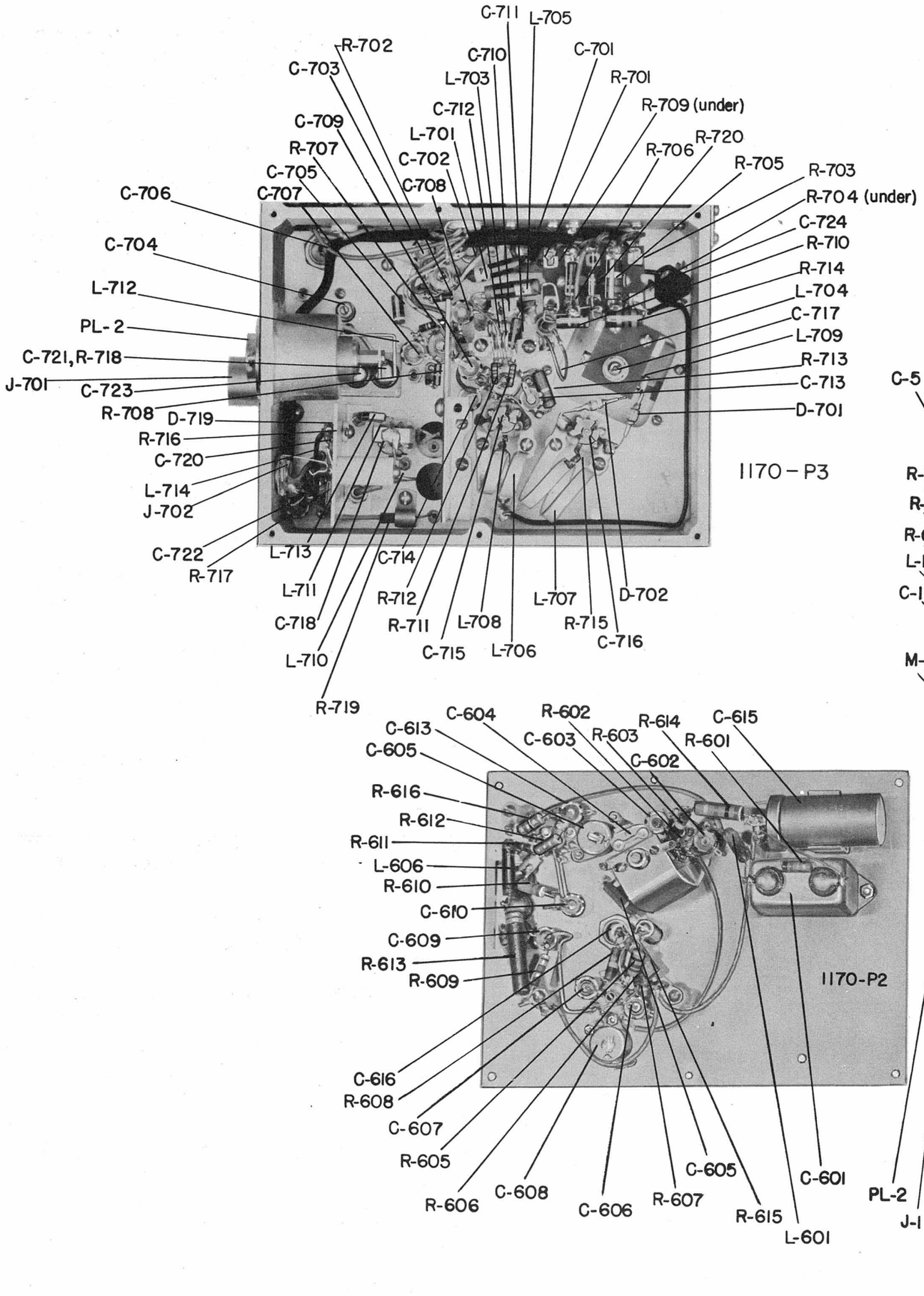

Figure S3. R-F Section with Type 1170-P1 R-F Tuning Unit in Place.

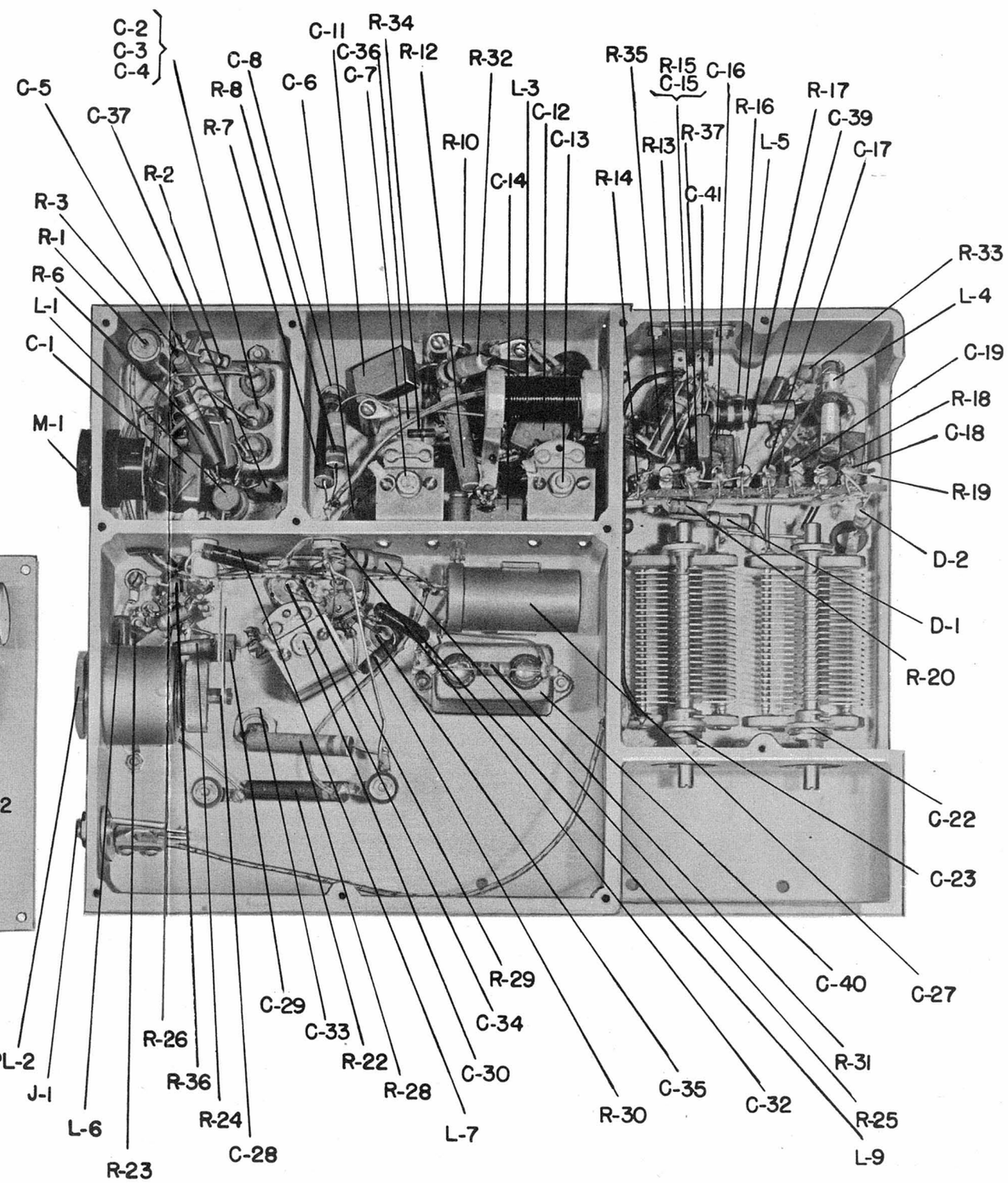

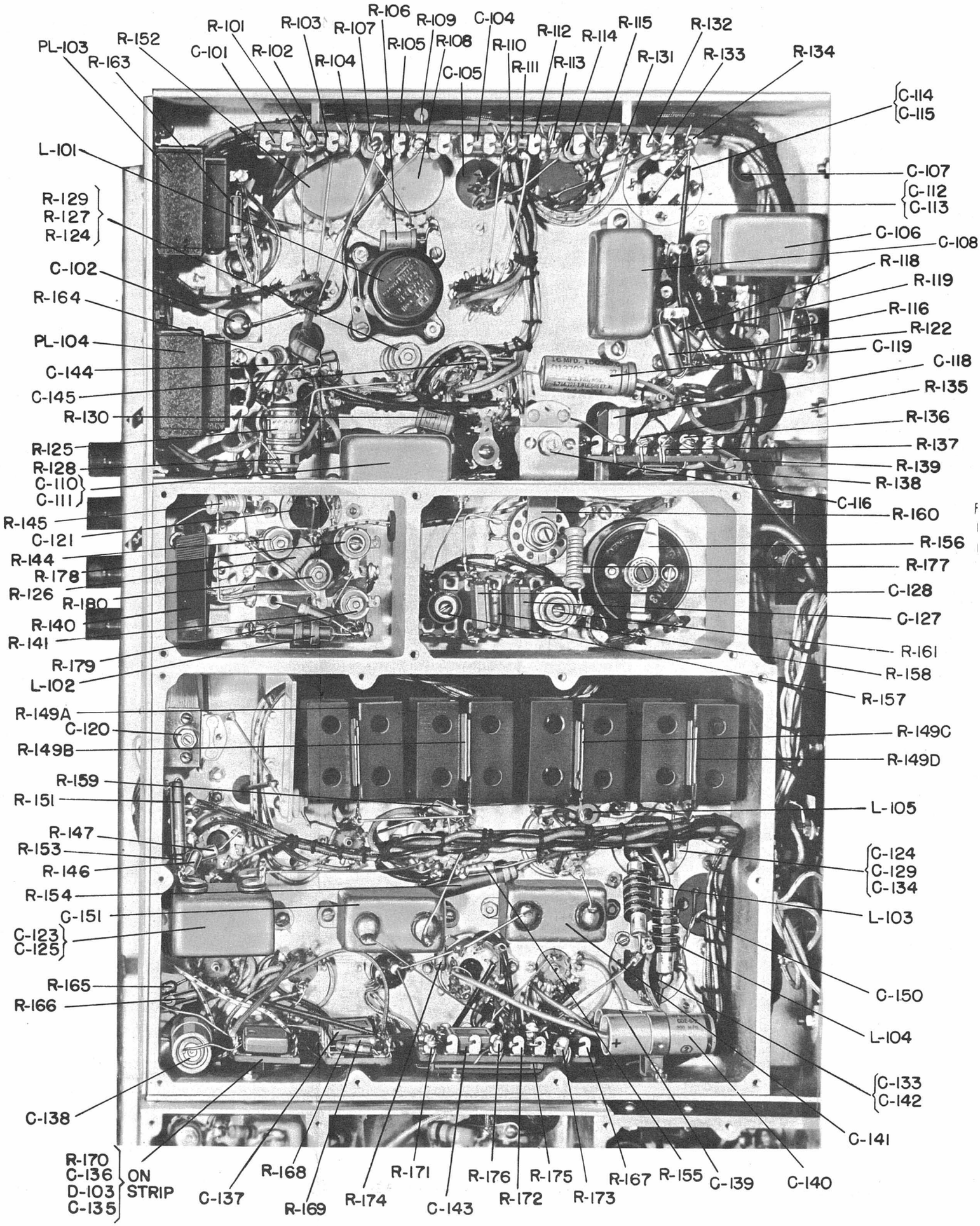

Figure S4. Discriminator Section.

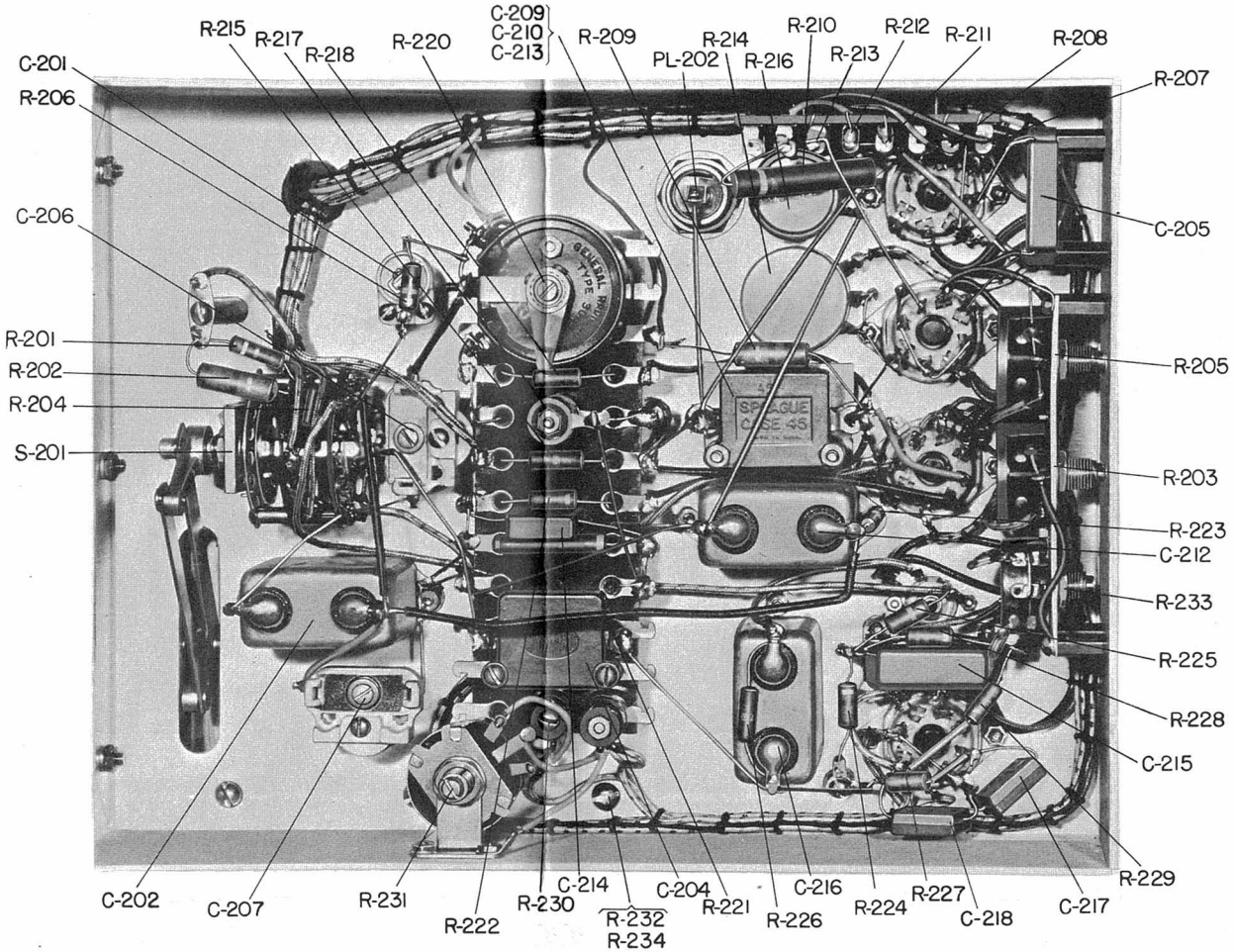

Figure S5. Modulation Meter Section.

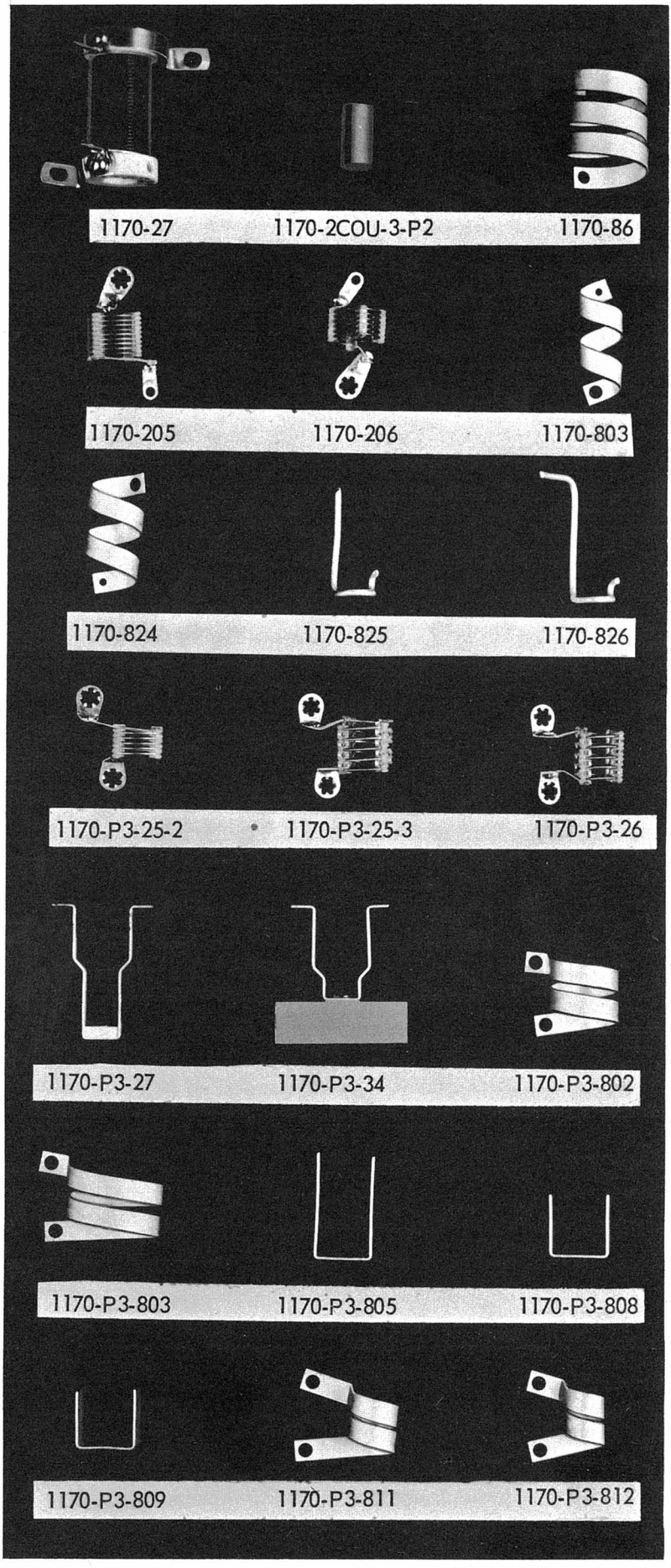

Figure S6. Tuning Coils.

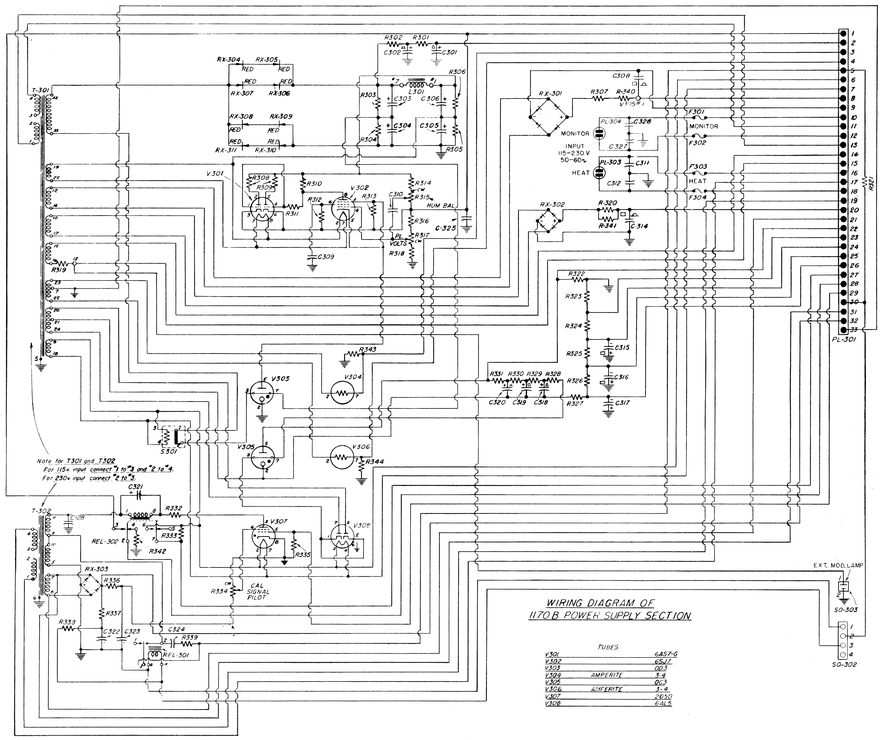

MODULATION METER SECTION

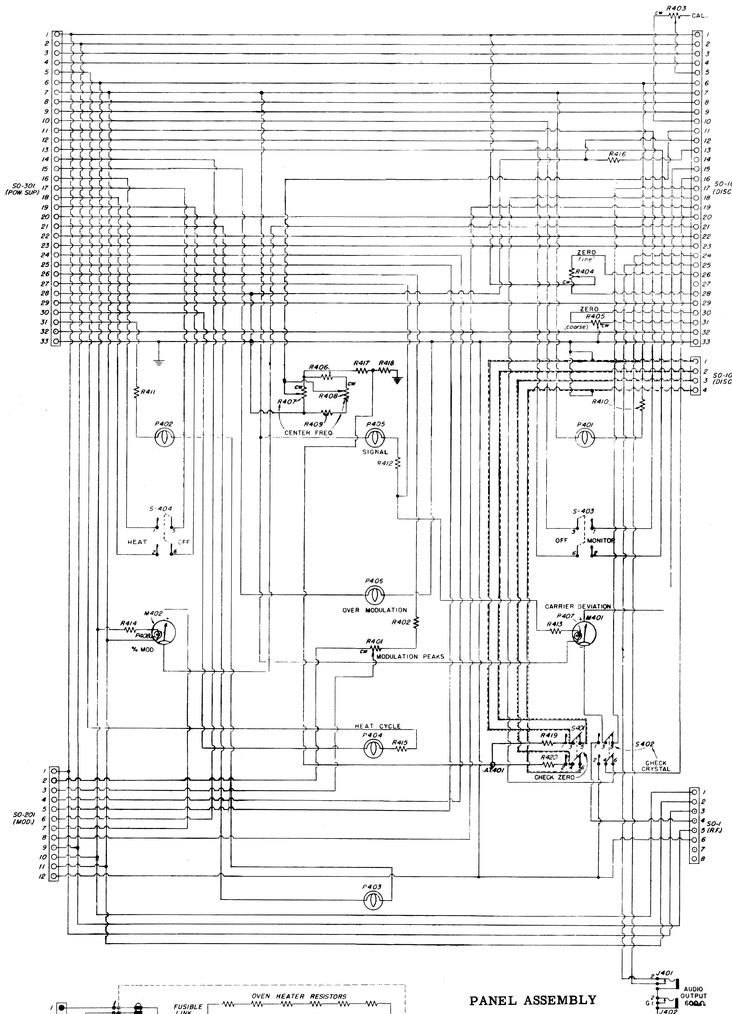

PANEL ASSEMBLY

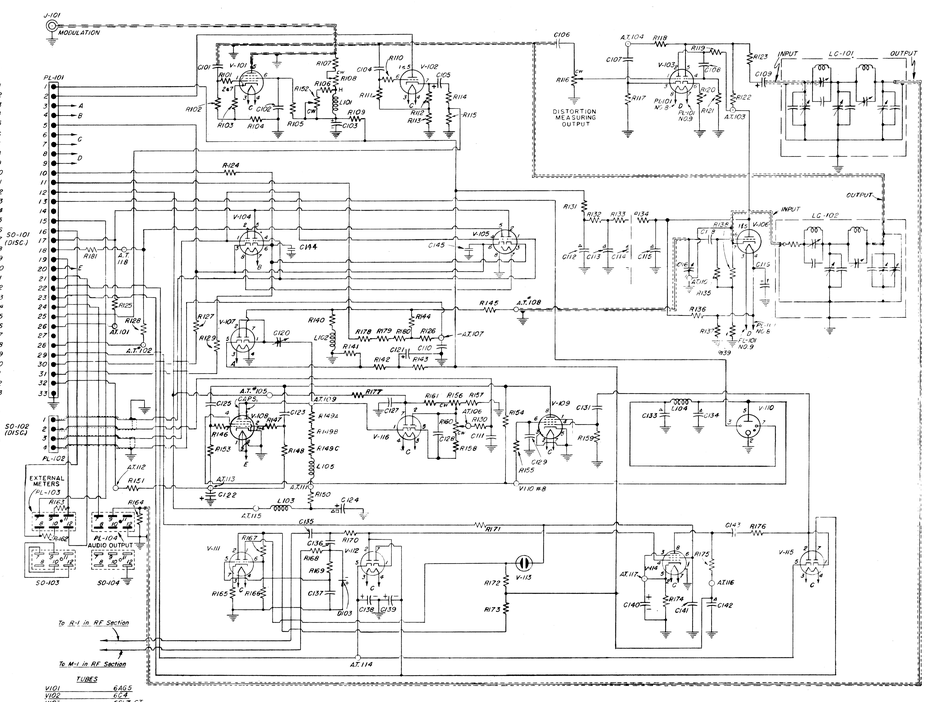

DISCRIMINATOR SECTION

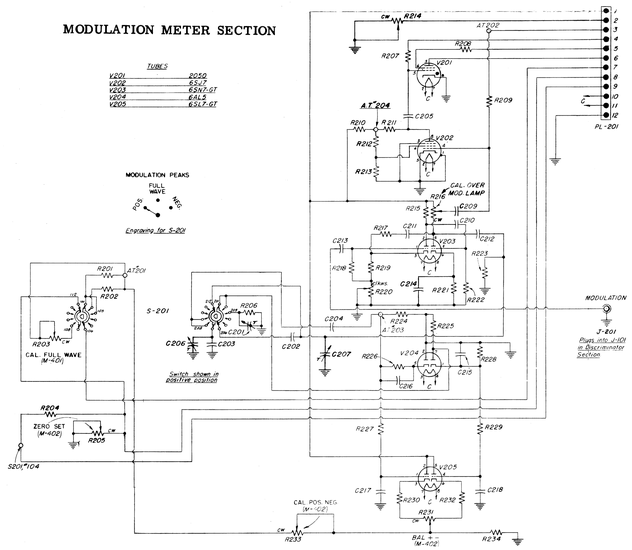

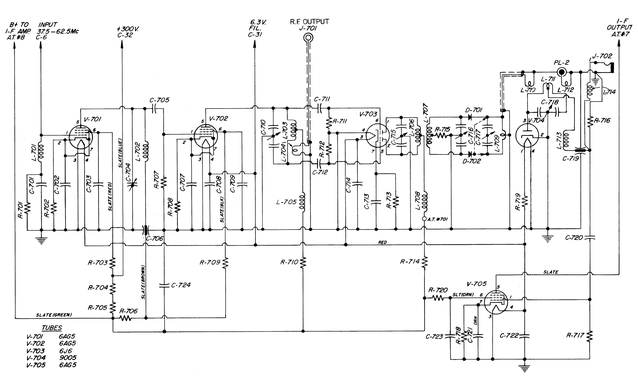

TYPE 1170-P3 R-F TUNING UNIT FOR 470 - 890 Mc
(INTERCHANGEABLE WITH TYPE 1170-P1)

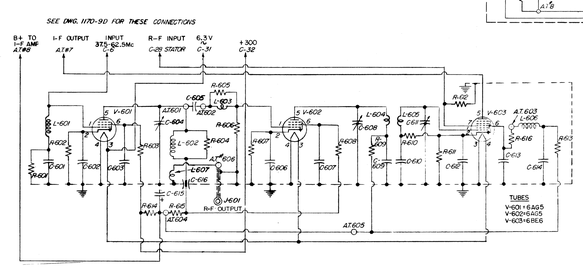

TYPE 1170-P2 R-F TUNING UNIT FOR 160 - 220 Mc
(INTERCHANGEABLE WITH TYPE 1170-P1)

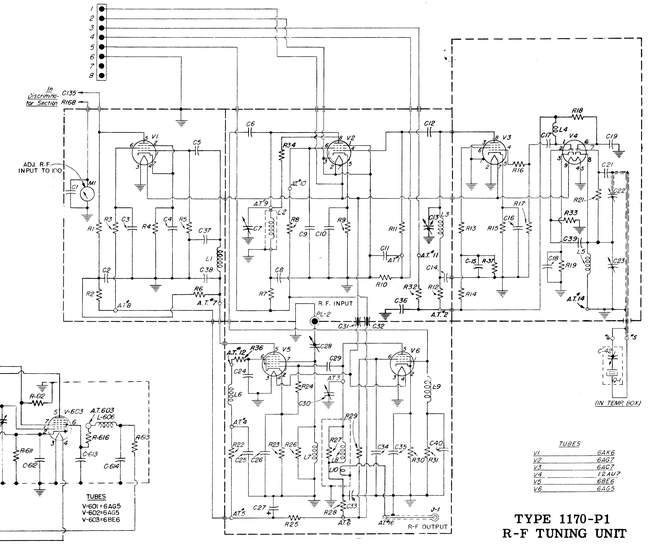

TYPE 1170-P1
R-F TUNING UNIT

R-F SECTION WITH TYPE 1170-P1 R-F TUNING UNIT

COMPLETE WIRING DIAGRAM OF TYPE 1170-B AND TYPE 1170-BT FREQUENCY-MODULATION MONITOR